TELEGRAPHY

T. E. HERBERT

Digitized by the Internet Archive
in 2026

https://archive.org/details/telegraphy0000tehe

TELEGRAPHY

BY THE SAME AUTHOR
AND FROM THE SAME PUBLISHERS

Telephony.

This work contains full information regarding the telephone systems and apparatus used by the British Post Office. It is intended for the use of telephone engineers, senior operators, and students. The syllabus of the City and Guilds of London Institute for the Grade I Examination is thoroughly covered, while the majority of the material required for the Final Grade has also been included.

In crown 8vo, cloth gilt, 883 pp., with 618 illustrations. **18s.** net.

Arithmetic of Telegraphy and Telephony.

By T. E. HERBERT, M.I.E.E., and R. G. DE WARDT, *of the Post Office Engineering Department.*

The opening chapter gives a brief recapitulation of elementary rules of arithmetic, and the authors then proceed to cover the ground of study required for the Grade I Examination in Telegraphy and Telephony. Artisans in the Telegraph Department in the Post Office will find the book of greatest use in studying to obtain promotion to higher grades.

In crown 8vo, with 37 diagrams. **5s.** net.

TELEGRAPHY

A DETAILED EXPOSITION OF THE TELEGRAPH SYSTEM OF THE BRITISH POST OFFICE

BY

T. E. HERBERT, M.I.E E.

CHARTERED ELECTRICAL ENGINEER
ASSISTANT SUPERINTENDING ENGINEER, POST OFFICE
ENGINEERING DEPARTMENT

FIFTH EDITION
REVISED AND ENLARGED

WITH 750 ILLUSTRATIONS

LONDON
SIR ISAAC PITMAN & SONS, LTD.
PARKER STREET, KINGSWAY, W.C.2
BATH, MELBOURNE, TORONTO, NEW YORK
1930

BIBLIOGRAPHICAL NOTE

First edition 1906
Second edition 1907
Reprinted 1908, 1909, 1910, 1911
Third edition 1916
Fourth edition 1920
Reprinted 1921, 1926

PRINTED IN GREAT BRITAIN
AT THE PITMAN PRESS, BATH

PREFACE

It is noteworthy that the progress in the science of Telegraphy during the past few years has probably been greater than that in any corresponding period in its history. The continued demand for the present work has consequently imposed upon me the obligation to bring the subject up to date, and this has necessarily involved a complete overhaul of the work from cover to cover.

In carrying out this duty, I wish at the outset, to acknowledge my indebtedness, and to express my grateful appreciation to Colonel Sir Thomas F. Purves, the Engineer-in-Chief to the Post Office, and this year's President of the Institution of Electrical Engineers for the facilities placed at my disposal to use official instructions, records, and researches.

To Lieut.-Colonel A. C. Booth, the Staff Engineer in control of the Telegraph Section of the Post Office Engineering Department, also, I wish specially to place on record an expression of my cordial thanks for the large amount of constructive criticism and active assistance which he has so generously afforded me during the progress of the revision. It is, indeed, quite impossible to over-estimate the value of this help, since it has given me the privilege of taking the full advantage of Colonel Booth's unique knowledge and vast experience.

While keeping to my original plan to explain and describe the telegraph system of the British Post Office in the clearest and simplest manner consistent with scientific accuracy, I have, nevertheless, found it to be necessary still to include a considerable amount of matter not to be found in any single elementary textbook on physics. This material is essential to the study of the purely technical side of Telegraphy, and I have been advised that the usefulness of the work would be

94304

seriously impaired, if these sections were eliminated. This view accords too with my own experience and judgment.

The early chapters have been carefully overhauled and extended. For example, the magnetization of iron has been more fully treated, and an account has been given of the new alloys used in the construction of electro-magnets and permanent magnets. A chapter has also been added on the rudiments of alternating currents in order to facilitate the study of voice frequency and other alternating current systems of telegraphy.

The chapter on Primary Cells has been modified to accord with the latest practice; for this, I have again to thank Captain J. G. Lucas.

In dealing with the subject of relays, opportunity has been taken to describe new types and advances in design. Brief mention has also been made of various quadruplex systems, although I am disposed to think that when the next edition of this work is called for, quadruplex telegraphs will have historical interest only.

Central Battery Telegraphs and the Concentrator form the subject of Chapter XI. The latest arrangements are set forth together with a description of the new Ancillary Concentrator and the Post Office Automatic Concentrator. For the latter I am indebted to Captain J. B. Laidlaw, who was responsible for the design.

The Wheatstone system has been given a new lease of life by the Creed additions. Detailed descriptions of the latest Creed electrical receiver and column printer have been included, since the system is used extensively not only by the Post Office but by newspapers throughout the Kingdom. In the preparation and checking of this section I have been fortunate in having the co-operation of Mr. F. G. Creed, to whom I am greatly indebted. I have also to thank Mr. A. B. Morice for revising the section dealing with the Shunted Condenser. The final section on High Speed Automatic Systems deals with the Siemens-Halske system used so extensively on voice frequency circuits in Germany.

The descriptions of the Wheatstone ABC, Steljes, and Hughes systems have been somewhat curtailed in view of their diminishing use.

The important chapter on the Baudot and its derivatives has been written by Mr. R. P. Smith, of the Telegraph Section of the Engineer-in-Chief's office. In its compilation Mr. Smith has, with that author's kind permission, used the articles of Mr. J. J. Tyrrell, published in the *Telegraph and Telephone Journal*. Very considerable advantage—more particularly in the preparation of the illustrations—has resulted from this facility. During the early years of Baudot development in this country Mr. Smith was largely responsible for the instruction and training of Dirigeurs in the C.T.O. and other offices, and has first hand knowledge of practically every Baudot installation in the country. Consequently, this chapter may be accepted as a trustworthy guide in the management and control of such apparatus. The opportunity has also been taken to describe all the latest advances in design, for example, the new Mendonça Governor, as well as the Murray and Western Electric Multiplexes are included.

The following chapter deals with Start-Stop Telegraphs, which are destined to play a most important part in future developments of the telegraph system of the Post Office. It is, indeed, quite possible that, with the growth of the telephone trunk system and the coordination of telegraphs and telephones, the necessity for all forms of multiplex and multi-channel voice frequency systems will disappear in favour of start-stop apparatus worked at sub-audio frequencies simultaneously on telephone trunk circuits. The latest Creed and Morkrum machines are described in an eminently clear and practical manner by Mr. F. W. Dopson, of the Telegraph Section of the Engineer-in-Chief's office. A noteworthy feature of these descriptions is the excellent series of perspective sketches which Mr. Dopson has made to illustrate his text. Mr. Dopson

is at present responsible for the training of the commercial staff in the adjustment, day to day maintenance, and care of such apparatus, and his advice on these matters may be accepted as authoritative.

The section on Secondary Cells has been checked by Mr. E. C. McKinnon, Chief Engineer of the Chloride Electrical Storage Co., and his assistant, Mr. C. P. Lockton, to whom my thanks are due for their critical examination of the manuscript.

The chapter on Repeaters has been brought up to date, and concludes with an account of the regenerative repeater. This was invented in France and first used on the Baudot System. It is now in world wide use.

The two following chapters deal with Voice Frequency Telegraphs and Simultaneous Telegraphy and Telephony. The former is based on the papers contributed to the I.E.E. and the I.P.O.E.E. by Mr. W. Cruickshank of the Research Section of the Post Office Engineering Department, to whom I am also indebted for checking and overhauling these sections, as well as for the account of sub-audio telegraphy included in Chapter XX. For other help I have to thank Mr. H. H. Harrison, of Automatic Telephone Manufacturing Co., and Messrs. H. C. Hannam-Clark, and G. C. Marris, of the General Electric Co.

The chapters dealing with Protection and Testing have been checked by Mr. A. O. Gibbon, of the Telegraph Section of the Post Office Engineering Department, to ensure that the latest practice has been embodied.

Some modifications have been made in the chapter on Aerial Lines, and I have to thank Major H. Carter, who is responsible for this branch in the Engineer-in-Chief's office for checking the account. I have to acknowledge, too, a similar service by Mr. A. O. Gibbon, formerly of the Construction Section, with regard to the Underground Lines chapter.

Appendix A deals with speed of working, and in the

first section I have reproduced the theoretical investigations of Messrs. W. T. Palmer and H. J. Josephs, described in the *P.O.E.E. Journal*. Following this is Mr. J. L. Taylor's method of forecasting the actual speeds attainable. This original contribution by Mr. Taylor is of considerable importance, since in the last edition of this work it had to be confessed that the only method was by comparison with the known rate of working on a circuit of similar construction but of different length.

The second section of Mr. Taylor's contribution is similar to that contained in the last edition of this work, but a note has been added on the application of hyperbolic functions to the problem—a note which largely goes to show that the easier and simpler method he has adopted is, on the whole, to be preferred, so far as overhead lines are concerned. In order that readers may construct curves, as described, by Mr. Taylor, I have added a table of hyperbolic functions for this purpose.

The remaining appendices call for no comment save, perhaps, the list of international symbols. These symbols, will, no doubt, be generally adopted, since the outstanding question as to the symbol for ohms has now been settled.

During the preparation of this edition, I have received so much help from my friends within and without the service, that my task has been reduced enormously; indeed, had it not been for this help I doubt whether I should have been able to find time to complete the work within a reasonable period.

The proof sheets have been read and checked for me by my old friend, Mr. H. H. Harrison, of the Automatic Telephone Manufacturing Co., and by my colleagues, Mr. R. G. deWardt, Capt. J. E. Fletcher, Messrs. J. Cleaver, and R. J. Vernon. I am indeed grateful to them for the many valuable suggestions which they have made while carrying out this task.

In the preparation of the early editions there are

three friends to whom I owe a special debt of gratitude, viz. the late Mr. H. Hartnell, Mr. R. Ianson, and Mr. O. P. Moller, and I feel it would be wrong to permit my obligation to them to be forgotten even though twenty-five years have elapsed since the inception of the work.

The new illustrations are in number 372; the new drawings have been made by Messrs. F. W. Dopson, T. C. White, and W. K. Dunn, to all of whom I tender my thanks.

The Journal of the Institution of Electrical Engineers, the printed papers of Institution of Post Office Electrical Engineers, the *Electrical Review*, the *Electrician*, *Electricity*, and the *Post Office Electrical Engineers' Journal* have naturally been freely used during the preparation of the new edition, and have proved of inestimable value in facilitating the work.

The list which follows comprises those firms to whom I desire to acknowledge my obligation, either for illustrations or for special information relating to apparatus or materials which they manufacture—

Messrs. The Automatic Telephone Manufacturing Co., British Insulated & Helsby Cables, Bullers, Cambridge & Paul Instrument Co., Chloride Electrical Storage Co., Creed & Co., D. P. Battery Co., Elliott Bros. (London), Evershed & Vignoles, Ferranti, General Electric Co., I.R. & G. P. Telegraph Works, Muirhead & Co., Nalder Bros., Relay Automatic Co., Siemens Bros & Co., Siemens & Halske, Standard Telephones & Cables, H. W. Sullivan.

Whilst every possible care has been taken to ensure accuracy, it is, nevertheless, vain to hope that in a work of this magnitude, there is no single error which has escaped detection, and I shall, therefore, be grateful if any reader who detects any such error or inaccuracy will favour me with an advice under cover to the publishers.

T. E. H.

London, 1930

CONTENTS

INTRODUCTION

PAGE

THE FUNDAMENTAL PRINCIPLES OF MAGNETISM AND ELECTRICITY AND UNITS 1

Static electricity—Potential—Calculations in electrostatics—Fundamental facts of magnetism—Molecular theory of magnetism—Lines of force—Magnetic induction—Quantitative values of magnetic effects—Voltaic electricity—Magnetic effects—Deflection of compass needle—Conductors and insulators—Units—Ohm's law—Nomenclature—Chemical and thermal effects of current

CHAPTER I

PRIMARY CELLS 23

Simple cell—Internal and external circuits—Polarization—Local action—Leclanché cells—Lucas's researches—Chemical action—Dry cells—Standard cells—Ideal cell—Characteristics of cells—Size of cells—Ampere-hour capacities of cells at various rates of discharge—Details of cells and their use

CHAPTER II

CALCULATIONS IN CONNECTION WITH CIRCUITS AND CONDUCTORS 53

Part I. Arrangement of Cells

Cells in series—Cells in parallel—Cells in multiple arc—Method in which to connect cells in different circumstances—Cells wrongly connected and special arrangements—Number of cells to furnish a given current—Special cases

Part II. Joint Resistance and Division of Currents

Resistances in series—Conductance—Mho—Several paths in parallel—Two paths in parallel—Several paths of equal resistance in parallel—Complicated circuits—Division of current between several paths in parallel—Division of current between two paths in parallel—Batteries in multiple arc joined to paths in parallel—P.D. and E M.F.

PART III. THE RESISTANCE OF WIRES OF VARYING DIMENSIONS PAGE

Factors determining the resistance of a conductor—Problems on resistance of wires of varying length, areas, and diameters—Resistivity—Wires of varying length and weight—Ohm-mile constant—Percentage conductivity—Resistance of one foot grain of wire—Wires of varying weight and diameter—Application of laws to cells—Effect of temperature on resistance and capacity—Effect of pressure on resistance

CHAPTER III

THE MAGNETIZATION OF IRON 75

The solenoid—Residual magnetism or remanence—The magnetic circuit—Law—Reluctance—Permeability—Magnetization curves—Calculation of reluctance—Magneto-motive force—Calculations—Hysteresis—Eddy currents—Pull of a magnet—Winding of electro-magnets—Qualities of iron for electro-magnets—Nickel-Iron alloys—Permanent magnets—Tungsten steel—Cobalt steel—Magnetization of permanent magnets

CHAPTER IV

THE MEASUREMENT OF CURRENT AND E.M.F. . 146

PART I. RESISTANCE COILS

Resistance boxes of various types—Types of wire to be used—Temperature variation of resistance—Gauge of wire—Rheostats C, D, F, J, and K—Double winding

PART II. GALVANOMETERS

Introductory—Tangent galvanometer—Helmholtz or Gaugain galvanometer—Tangent of an angle—Tangent scale—Theory of tangent galvanometer—Absolute measurement—Controlling magnet—Galvanometer constant—Paul's unipivot instruments—Horizontal galvanometer—Detector No. 2—Detector No. 4—Galvanometers with induced needles—Galvanometer 22A—Differential winding—Galvanometer 1A—Moving coil galvanometers—Ammeters—Moving iron and hot wire ammeters—Reflecting galvanometers—Damping—Kelvin (or moving magnet) reflecting galvanometers—Astatic needles and systems—D'Arsonval (or moving coil) reflecting galvanometers—Sullivan galvanometer—Ballistic galvanometer—Figures of merit—Number of

PAGE

convolutions—Sensitiveness and sensitivity—Galvanometer shunts—Principle—Laws—Compensating resistance—Problems—Universal shunt—Constant of reflecting galvanometer

Part III. The Measurement of E.M.F.

Principle—Voltmeter—Multipliers—Principle of Potentiometer—Rayleigh's compensation method

CHAPTER V

THE MEASUREMENT OF RESISTANCE AND BATTERY TESTING 169

Part I. The Wheatstone Bridge

Theory of the Wheatstone bridge—P.O. form of bridge—Reversing switch—Practical use of bridge—Measurement of resistances having capacity, inductance, or an E.M.F.—Wheatstone bridge for precision testing

Part II. The Megger and Bridge-megger

Evershed ohmmeter—Principle—Description—Range—Price guard wire—The Bridge-Megger—Principle—Details

Part III. Various Methods of Measuring Resistance

Very low resistances—Rough methods—Voltmeter method—Direct deflection method

Part IV. Battery Testing

Measurement of E.M.F.—Measurement of internal resistance—Voltmeter shunt method—Wheatstone bridge method—Resistance of secondary cells—Post Office standard test for primary cells—Lucas's researches—Coil testing No. 1

CHAPTER VI

CAPACITY AND CONDENSERS 170

Definition of a condenser—Capacity—Electro-static lines of force—Dimensions of condensers—Specific inductive capacity—Condensers in series and parallel—Dielectric for condensers—Condensers used in telegraphy—Mansbridge condensers—7¼ mf. condenser—Insulation of condensers—Specification of insulation and capacity—Condenser discharge—Other electrical units—Measurement of capacity—Direct deflection—Gott method

CHAPTER VII

PAGE

THE INDUCTION OF E.M.F. AND ALTERNATING CURRENTS 190

Induced E.M.F.—Fleming's right-hand rule—Value of induced E.M.F.—Lenz's law—Induction coil and transformer—Mutual induction—Self-induction—Unit—Relays in series and parallel—Alternating currents—Principle of alternator—Generator—Alternating current wave—Sine of an angle—Periodicity—Virtual current and E.M.F.—Measurement of alternating current—Lag and lead — Impedance — Calculations — Power — Capacity—Resonance—Use of impedance in telegraphy—Use of condensers in telegraphy—Direct current generator

CHAPTER VIII

SINGLE-CURRENT SYSTEMS, RELAYS, AND THE DOUBLE-CURRENT SYSTEM 212

Earth return—Earth connection—Sounder—Vyle polarized sounder—Windings—Figure of merit and inductances—Testing—Theory of polarized sounder—Single current key—Contact metals—Single current direct sounder—Up and down stations—Connections—Intermediate stations—Path of current—Battery power—The inker—Polarized inker—Open and closed circuit working—Single needle and double plate sounder—*Relays*—Definition—Polarized relay—Relaying sounder Non-polarized relay "C"—Relays used in telephony—P.O. standard relay—P.O. standard neutral relays—Magnetic circuit of standard relay—Tests for differentiality—Resistance and figures of merit—Relay standard B rectangular base—*The G relay*—Gulstad principle—G relay—Arrangement—Actual connections—Adjustment—Modified circuit for G relay—Relay standard H—New types of relay—Relay with flexible contacts—Creed 1927 relay—No. 209 F.A. relay—No. 215 type relay—Siemens-Halske relay—Prevention of sparking at relay contacts—Design of relays—Other types of relay—Electro-adhesion—Magnetic drum relay—*Single current sounder*—The *double current* system—Advantages of double current system—Reverse current and charge upon line—Detailed explanation—Other advantages of double current system—Double current key—Connections of double current sounder—Path of current—Battery power and current required—Local inker—Double current direct sounder

CHAPTER IX

PAGE

THE DIFFERENTIAL DUPLEX 274

Systems of duplex working—Opposition method—Path of current—Intermediate position of keys—Use of non-polarized relays and direct working—P.O. or combination methods—Path of current—Numerical values of current in each part of the circuit—Intermediate position of keys—Single current sounder duplex—Double current sounder duplex—Conditions for double current duplex working—Skeleton connections—Both keys at rest—One key depressed—Effect of capacity of line—Graphic representation of the charge upon a line—Paths of line and compensation circuit charges and discharges—Summary of effects of line and compensation circuit charges and discharges—Arrangement of compensation circuit for balancing long lines—Effects of defective capacity balance—Retardation and condenser coils—Capacity balance may differ at the two stations—Duplex switch—Connections of duplex set—Double current direct duplex sounder—Resistance balance—Difficulty in working very short circuits—Capacity balance—A.T.M. universal duplex unit—Battery power and current required

CHAPTER X

THE QUADRUPLEX 308

Principle—Skeleton connections—Value of current under various conditions—Summary of quadruplex conditions—The "B kick"—Condenser "B" side arrangement—The A and B keys—Six-terminal reversing key—Testing—Sparking, battery, and earthing, resistance coils—Effects of short-circuit in the intermediate position of the keys—Connections—Nine-terminal 2-position switch—Universal connections—Balancing—Adjustment—Decrement working—Use of quadruplex on short lines—Current required and type of battery used—The Diplex—Wheatstone on the "A" side—Other quadruplex systems—American systems—Argentine "B" side—Short line "B" side with polarized sounder—Creed quadruplex—Harrison's Morse multiplex—Quadruplex extended circuits—Split quadruplex repeater—"A" side relayed duplex—Forked quadruplex—"A" side relayed simplex central battery

CHAPTER XI

CENTRAL BATTERY WORKING AND CONCENTRATORS 345

Part I. Central Battery Working

Principle—Head office set with two voltages—Purves central battery duplex—Hay duplex—Vyle and Smart

PAGE

duplex—Connections—Short line duplex—Wheatstone working on C.B. circuit

PART II. THE CONCENTRATOR

General principles—Auxiliary apparatus—Jacks—Plugs—Cords—Jack, lamp, and relay (Type 100A)—Adjustment—Concentrator switchboard—Central battery circuits—Indicator key—Time jack—Testing apparatus—Working sets—C.B. only—C.B. and D.C.S.—Universal connections—Key 87B—Home signals cut out—Absorbing resistances—Use of two keys, 87B—Transfer circuits—Ancillary concentrators—The automatic concentrator—Partial concentration—Telegraph switching systems

CHAPTER XII

HIGH SPEED AUTOMATIC SYSTEMS . . . 382

GENERAL DESCRIPTION

PART I. THE WHEATSTONE AUTOMATIC SYSTEM

Wheatstone perforator—Operation of the punches—Perforator adjustment—Pneumatic perforators—Kotyra perforator—Kleinschmidt keyboard perforator—Variable feed device—Creed keyboard perforator—Booth-Willmot Morse keyboard perforator—Transmitter—Motive power—Arrangement of the reciprocating rods and divided lever—Action of transmitter in signalling a word—Summary of action of transmitter—Magnetic bias transmitter—Transmitter bias—Arrangement for regulating the speed of the transmitter—Action of fan in maintaining uniformity of speed—Stopping and starting lever—Bolting of transmitter—Speed of slip—Other types of transmitter—Creed transmitter—The receiver—Inking arrangements—Motive power—Double slip drawer and bell—Motor and train—Winding of coils—Spring receivers, speed of slip, and figures of merit—The shunted condenser, self-induction, and time constant—Use of shunted condenser to balance self-induction—Action of shunted condenser in Wheatstone working—Adjustment of shunted condenser—Action of shunted condenser upon a very short line—Resistance of sending circuit—Transmitter switch—Connections of a full Wheatstone set—Adding a transmitter to a key-worked set—Substitution of a receiver for a relay—Leak working—The Wheatstone duplex—Connections—News circuits and battery power required

PART II. THE CREED WHEATSTONE AUTOMATIC SYSTEM PAGE

Creed receiving perforator — Mechanism — Receiver adjustments—Speed adjustment—Connections—Creed printer—Mechanism—Type head—Cam shaft chart—Creed Morse column printer Adjustment and operation

PART III. THE SIEMENS-HALSKE HIGH SPEED AUTOMATIC PRINTING TELEGRAPH

General principle—Keyboard perforator—Transmitter —Receiver—Synchronizing arrangements

CHAPTER XIII

THE BRIDGE DUPLEX 463

Advantages of the system—General principle—Intermediate position of the key—Resistance of the arms or duplex coils—Double current working—Both keys at rest—One key depressed—Both keys depressed—Intermediate position of keys—Compensation circuit and balancing—Signalling condensers—Summary of action of signalling condensers—Reading condenser—Connections—Bridge duplex with G relay—Calculation of the current in each part of the circuit—Calculation of battery power—Power employed

CHAPTER XIV

THE WHEATSTONE ABC, STELJES RECORDER, AND THE HUGHES 480

PART I. THE WHEATSTONE ABC

General principle—Combined indicator and bell—Communicator—Operation of contact maker and pawl arm—Connections

PART II STELJES RECORDER

Principle—Type-wheel escapement—Printing arrangements—Figure changing cam—General arrangement and slip feeding device—Unison lever

PART III. THE HUGHES

Principle—General description—Hughes electro-magnet —Motor and governor—Electrical details—Chariot—Rejector—Number of characters printed per revolution —Type wheel axle—Change-over from letters to figures —Printing axle entrained—Paper movement—Zero adjusting lever—Connections—Practical operation—Effects of retardation—Hughes duplex—Duplex resistance coils

CHAPTER XV

PAGE

THE BAUDOT 517

Introductory—Principle of Multiplex—Keyboard manipulation—Keyboard adjustment—Key levers—Contact adjustment—Locking adjustment—Receiver—Electrical operation of receiver—Mechanical operation of receiver—Speed of receiver—Receiver electro-magnets—Type-wheel fittings—Speed control of receiver—Governor—Adjustment of receiver speed—Brake circuit—Receiver adjustments—Printing faults—Grunenwald system—The distributor—Phonic wheel—Vibrator—Adjustments—Baudot governor—Governor theory—Governor adjustments—Direct motor-driven distributor—Adjustments—Spring tension—Oiling—Distributor frame and plates—Rotating brush arms—Contact brushes—Line retardation—Unison—Epicyclic gear at corrected stations—Correcting electro-magnet—Adjustment—Duplex working—Baudot circuits and G relay—Baudot circuits with a repeater—Divided Baudot circuits—Re-transmitter—Adjustments—Intermediate distributor table—Baudot simplex—Two-line simplex—Connection case—Morning procedure to ensure good working—Metal storage transmitters—Automatic Baudot—Distributor arrangement for automatic transmission—Western Electric transmitter—Booth-Willmot keyboard perforator—Electrical circuit—Testers—Tester for use with automatic Baudot apparatus—Murray multiplex—Murray keyboard perforator—Murray transmitter—Murray re-perforator—Murray distributor and connection case—Creed multiplex printer—Western Electric multiplex—Correction—Position finding—Modifications of the system—Rotary repeaters—Morkrum typebar column printer—Morkrum cam distributor

CHAPTER XVI

START-STOP TELEGRAPHS 632

Introductory—Teleprinter multiplex—*Creed combined transmitter printer* (*Teleprinter* 3A)—Principle—Transmitter clutch—Transmitter clutch trip mechanism—Combination bars and selecting levers—Contact lever and contact tongue—Operation of combination bars—Start signal—Code impulses—Stop signal—Bias spring and jockey roller—Send-receive switch—Key-board locking device—Creed relay—Mechanical relay—Combination combs and bell-crank latches—Shift comb—Inversion—Typehead and typehead clutch—Operations of printer cam sleeve—Paper feed—Governor—Adjustments Pawl abutment (transmitter)—Locking bar and trip bar—Transmitting contacts—Jockey roller tension—

PAGE

Striker blade—Selector fingers—Selector finger re-setting link—Latches—Relay—Printing hammer—Connections—Simplex connections—Duplex connections—Two-line simplex—*Creed keyboard transmitter and printer* (*Teleprinter 5A and 4A*)—Introductory—Keyboard transmitter—Transmitter clutch trip mechanism—Combination bars and selecting levers—contact tongue—Operation of combination bars—Start signal—Code impulses—Stop signal—Send-receive switch—Keyboard locking device—Letter counter—Governor—Printer—Paper carriage—Column feed—Carriage return—Motor starter—Governor—Connections—Duplex connections—Adjustments—Trip lever (transmitter)—Transmitting cam sleeve—Transmitting contacts—Locking bar—*The* (*type-wheel*) *Teletype* (*Teleprinter 1A*)—Principle—Selector bars—Locking latches and contact levers—Start-stop contacts—Locking loop—Keyboard clutch—Printer clutch—Shuttle roller—Operation of seekers—Print arm release—Printing—Inversion—Printer clutch brake—Governor—*The type-bar Teletype* (*Teleprinter 2A*)—Principle—Transmitter clutch mechanism—Printer—Receiving clutch and trip mechanism—Selection—Printing—Code bar locking—Tape feed—Spacing cut-out—Bell mechanism—Inversion—Ribbon feed and ribbon reverse—Governor—Connections—Simplex—Duplex—Adjustments

CHAPTER XVII

SECONDARY CELLS AND SECONDARY CELL WORKING 734

Part I. Secondary Cells

General principles—Chemistry of secondary cells—Chemical formulae—Positive plates—Chloride rosette cells—Negative plates—Container and mounting—Positive and negative sections—Separators and spray plates—Plate supports and packing pieces—Electrolyte—Hydrometer—Lucsmart type—E.M.F. on charge and discharge—Internal resistance and temperature—Size of cells—Counter E.M.F. cells—Treatment of cells—Cadmium testing—Battery room

Part II. Secondary Cell Working

Introductory—Theory of system—Universal working with primary batteries

Part III. Power Arrangements

Voltages required—24^{V} sets—Main sets—General scheme of fuses—Main fuses at the cells—Switch cabinet

PAGE

—Details of positive and negative switches—Main charging switches—Main distributing cabinet—Distribution and fuse case—Secondary cell working for small offices—Loop batteries—Charging arrangements—Provision of charging current—Electro-magnetic cut-outs—Size of cells

PART IV. ALTERATIONS IN THE CIRCUIT CONNECTION FOR UNIVERSAL BATTERY WORKING

General principles—Protective resistances—Use of resistances between the fuses and instruments—Single current sounder—Single current duplex—Double current sounder—Double current duplex—Wheatstone—Special circuits—Wheatstone duplex for special sets—Wheatstone duplex (differential system)—Wheatstone duplex (bridge system)—The H relay circuit—Quadruplex—Power leads—Test box speaking set

CHAPTER XVIII

REPEATERS 807

Principles—Single current simplex repeater—Principle of D.C. simplex repeater—Electro-magnetic switch—Simplex repeater—Path of current—Duplex repeater—Duplex and simplex switch—Leak circuit—Standard universal connections—Simplex and differential duplex on both sides, universal connections—Relays with rectangular bases—Resistance lamps—Leak circuit—Adjustments—Faults—Loss of speed in repeating—Bridge duplex universal connections—Duplex, bridge or differential on either side—Permanently duplex repeaters—Forked repeaters—Path of current—Auxiliary circuit for auto-switch—Hughes repeaters—Anti-induction device—Quadruplex repeater—Drop indicators in main battery leads—Alarm repeater No. 3—Hughes silencer—Regenerative repeaters—Creed auto-repeater

CHAPTER XIX

THE THERMIONIC VALVE AND VOICE FREQUENCY TELEGRAPHS 847

PART I. THE THERMIONIC VALVE

Introductory—General principles—The thermionic valve as a generator of alternating current—Electrical filters—Speed of working

PAGE

PART II. SYSTEMS

Siemens and Halske—Sending end—Receiving end—Telephone speaking system—Battery supply, one end—Supplementary safeguards and alarms—Western Electric—Principles—Sending end—Receiving end—Current consumption—General Electric Co's system—Selt system — Sending — Receiving — Wald system—Conclusion—Post Office research—Duplex—Single channel high speed circuit—Sending—Receiving

CHAPTER XX

SIMULTANEOUS TELEGRAPHY AND TELEPHONY ON THE SAME CIRCUIT 883

Superposing—Van Rysselberghe system—Composite circuit—Superposing with repeating coils—Rural telephone circuits on telegraph routes—Superposing with bridging coils—Telegraph superposed on telegraph loop —Four telegraph circuits (three loops and one earthed circuit) on four-wire cable circuit—Sub-audio telegraphy —General principle—Filters—Details of circuit—Performance—Super-phantom on four wire telephone cable core

CHAPTER XXI

THE TEST BOARD AND PROTECTIVE DEVICES . 898

GENERAL PRINCIPLES

PART I. THE TEST BOARD

General principles—General—Route order—Test box manipulation—Battery test box—U-link test board—Switch-spring test board—Principle—Cross connecting facilities—Test board changes and transfer circuits—Special intermediate sets—Looping strip

PART II. LIGHTNING PROTECTORS

Principle—" D " protector—" D " protector, new type —" C " protector—" G " and " H " protectors—Tablet protector—" F " protector—Position of protector and inductance spiral

PART III. PROTECTION FROM POWER CIRCUITS

Principles—Guard wires for tramways—Use of covered wire—Guarding electric light and power circuits—Use of indiarubber gloves—Protection applied to circuits—Glass tube fuse—Later types—Heat coils—" A " and " B " types—Combined protector, heat coil " A " and

PAGE

fuse fitting—Protector and heat coil fittings—Protector "D," heat coil "B" and fuse fittings—Protectors, heat coil, and test—Principle governing the fitting of heat coils and fuses

PART IV. POWER CIRCUIT INTERFERENCE WITH TELEGRAPHY

General principles—Induced voltages—Resonant shunts—Use of transformer—"H" relay circuit

PART V. MAIN DISTRIBUTING FRAME AND CABLING

General principle—Fuse mounting No. 4028—Protector, heat coil, and fuse cases—Precautions against fire—Diversions consequent on burn out—Office wiring

CHAPTER XXII

TELEGRAPH TESTING AND THE FORMATION OF SPECIAL CIRCUITS 945

GENERAL PRINCIPLES

PART I. INSULATION AND CONDUCTOR RESISTANCE

General principles—Effects of loss of insulation—Definition of insulation and conductor resistance—Insulation resistance per mile—Working and maintenance standards—Conductor resistance tests—Earth current effects—Individual resistance of a number of circuits between the same two points

PART II. PERIODICAL TESTS

Principles—Periodical tests of overhead circuits—Periodical tests of main underground cables—Telephone subscriber's circuits

PART III. FAULT LOCALIZATION

General—Various types of fault—Earths—Disconnections—Contacts—Necessity for earth connection—Intermittent faults—Test tablets—7-hole—22-hole—Causes which produce faults

PART IV. UNDERGROUND CABLE TESTS

Principles—Maintenance standards—Electrification—Grouping of wires in an air space cable for insulation tests during construction

PAGE

PART V. TESTS FOR THE POSITION OF A FAULT AND RESISTANCE OF EARTH CONNECTION

Varley loop test—Murray loop test—Tests for the position of a contact—Pomeroy's method of testing earths—Post Office test of earth

PART VI. THE MAKING GOOD OF FAULTY CIRCUITS, SPECIAL ARRANGEMENTS, AND EARTH CURRENTS

Symbols used for lines and apparatus upon plans—The "making good" of faulty circuits—The formation of special circuits—Useful rules for battery power—Earth currents—Remedial measures

PART VII. TRACING INSTRUMENT FAULTS

Introductory—Effect of earth fault—Division of circuits into line, sending, receiving, and local—Example of diagnosis—Regulation—Duplex sets—Lack of differentiality—Quadruplex circuits—Contacts in coils of apparatus

CHAPTER XXIII

UNDERGROUND LINES 994

Advantages and disadvantages—Design and lay-out—Present value of annual charges—Selection of route—Thrust boring—Protected cable—Troughing—Earthenware ducts—Multiple way ducts—Fibre duct—Iron pipes—Bends—Steel pipes—Duct routes—Octagonal ducts—Formation—Couplings and markers—Joint boxes—Buried boxes—Manholes—Footway—Carriageway—Reinforcement—Cable bearers—*Paper core cables*—Comparisons—Twin cables—Multiple twin cables—Star quad cable—Obsolescent types of cable—Composite cables—*Electrolytic damage to lead-covered cables*—Methods of testing—Bonding—Drainage connections—*Inductive disturbances*—Electro-static—Dynamic—*Cabling and jointing*—Cable lengths—Pulling-in lead-covered cables—Cable grip—Connecting link—Motor winch—Jointing lead-covered cables—100 lb. conductors—Small conductors—Drying joints—Boiling out—Joint testing and dry air plant—Desiccating—CO_2 plant—Tests during construction—*Connection between underground and overhead routes*—Cable distribution plug—Terminal blocks—Termination of cables—Cable distribution heads—Multiple joints—Pole test boxes—Faults

PAGE

CHAPTER XXIV

AERIAL LINES 1060

Timber—Preservative processes—Rüping process—Arms—*Insulators*—Qualities of material—Double shed—Terminal insulators—J-bolt—Pothead insulators—Leading in—Other types of insulator—*Line wire material*—Copper, bronze, and cadmium-copper—Binding-in—Joints—Terminations—Earth wiring—*Dimensions of poles*—Wind pressure—Line wires under storm conditions—Details of poles—Depth to be buried—Marshy ground — Lagging — *Stays* — V-stay — Parallel stays—Stay crutch—Stays crossing power circuits—*Struts*—A-poles—H-poles—Saddle wire—Pole steps—Erection of a pole—Use of derrick—*Wiring*—Ratchet and tongs—Draw vice—Safety belt—Bosun's chair—*Sags and stresses*—Calculations—Factors of safety—Pendulum method of measuring dip—"Ping-pong" method of measuring tension—Stresses on stays—Calculations—Angle in line, calculation of stresses—Renewals and alterations — *Surveying* — Longitudinal stays — Heavy angles—Game guards—*Brackets and bracket routes*—Humming of wires, silencing devices—*Aerial cable*—Roof standards

APPENDIX A

SPEED OF WORKING AND FACTORS OF SAFETY . 1122

Part I. Speed of Working

General considerations—Kelvin law and arrival curve—Capacity—Metallic circuits—Duplex speeds—Signal shape—Theoretical speed—"Encroachment" or "margin" and loaded telegraph cables—Calculation of working speeds in telegraph underground cables—Weak current telegraphy

Part II. Overhead Telegraphs, Circuit Efficiency and Factors of Safety

Systems—Sent, received, and perfect current—Mileage limitations for various systems—Use of hyperbolic functions

APPENDIX B

Examples on the Calculation of the Capacity of Circuits 1154

PAGE

APPENDIX C

INTERNATIONAL SYMBOLS 1157

APPENDIX D

USEFUL NUMBERS 1159

APPENDIX E

TABLE OF EXPONENTIAL AND HYPERBOLIC FUNCTIONS 1161

APPENDIX F

STANDARD WIRE GAUGE 1164

APPENDIX G

EXAMINATION SYLLABUSES 1165

I. Departmental technical examination before promotion (telegraphs)—Syllabus—Synopsis
II. City and Guilds of London Institute 37B. Telegraphy and Telephony: (*a*) Telegraphy—Grade I—Final examination

INDEX 1171

TELEGRAPHY

INTRODUCTION

THE FUNDAMENTAL PRINCIPLES OF MAGNETISM AND ELECTRICITY, AND UNITS

STATIC ELECTRICITY

THE results of modern research* show that the structure of all matter is electrical in character and, indeed, that each kind of matter consists of a particular aggregation of protons and electrons. The effects which are used in telegraphy result when the distribution of these protons and electrons is modified. It is with these effects that the present volume deals.

If two substances are rubbed together, they pass from the normal to the electrified condition. This effect is, however, due more to intimacy of contact between every portion of each surface than to actual friction. The condition of the two substances is different, and one is said to be positively, and the other negatively, electrified. The terms positive and negative are respectively used to signify a surplus above and a deficiency below the normal amount of electricity present. In fact, a negatively charged body has an excess above the normal quantity of electrons which are the ultimate units of negative electricity, whereas matter having less than the normal quantity of electrons

* Excellent popular accounts are given in Benn's Sixpenny Library: No. 101, *Modern Scientific Ideas*, by Sir Oliver Lodge; No. 103, *The Atom*, by E. N. da C. Andrade; and No. 143, *The Structure and Properties of Matter*, by W. A. Caspari; also in *Atoms and Electrons*, by J. W. N. Sullivan.

manifests positive electrification. A current of electricity may be regarded as a drift or movement of electrons in the opposite direction to what is conventionally defined as the direction of a current—the direction, in fact, which in other days was often described as a " zinc " current.

If a dry glass rod be rubbed with silk, it will be found that the glass is positively and the silk negatively electrified. A list may be prepared (from the results of experiments) in which substances are placed in such an order that upon any two substances named being rubbed together the resulting electrical condition of each may be defined according to its relative position on the list.

The electrified condition of a body may be imparted to others either by direct contact or by induction. Experiment proves that bodies similarly electrified, or charged, repel, and bodies oppositely charged attract each other.

It is vitally important to notice that in every case in which electrification results the values or quantities of positive and negative electrification are equal. This fact may be proved experimentally, or it may be deduced by mathematical analysis. If, therefore, a positive and a negative charge have been produced—suitable conditions being provided—an electric current will flow from the positively to the negatively electrified body until electrical equilibrium has been restored. Until this condition of equilibrium is reached there always exists a force of attraction between the bodies.

Potential. The term potential implies the power or capacity to do work.* Now a charged body is endowed with the power of attracting light substances—a property which an uncharged body does not possess. The uncharged body is said to be at zero potential,

* This statement requires some qualification, since the power to do work obviously depends upon the potential of other bodies. No body can be said to have an *absolute* value of potential, because

whilst the charged body has a positive or negative potential according to the sign of its electrification. Potential, which may be regarded as electrical pressure, corresponds very closely to level as applied to water, and just as a flow of water takes place from a higher to a lower level, so does a flow of electricity or an electric current take place from a higher to a lower potential in its endeavour to restore electrical equilibrium. The numerical value of potential is defined in terms of the work which a body can do in virtue of its potential. In order to correlate this definition with what has been said as to the identity of potential with electrical pressure, imagine a large tank filled with water and having a small pipe of considerable length leading from its base along the ground. Consider the difference in the rate at which the water would leave the pipe according to whether the discharging end of the pipe was just below the level of the water in the tank or whether the tank was raised high above the ground. The difference in level between the tank and the issuing water could clearly be defined in terms of the rate at which the water issued, or, what is more to the point, in terms of the work which the issuing water, in virtue of its pressure, could perform.

Calculations in Electro-statics. The fundamental facts and definitions upon which the numerical aspects of the various effects are dealt with may be briefly stated as follows—

1. *Force is that which changes or which tends to change* (a) *the state of rest, or* (b) *the uniform motion of a body.*

2. *The unit of force* (*the dyne*) *is such that acting for* 1 *second upon a gramme of matter imparts to it a velocity of* 1 *cm. per second.*

If a gramme of matter is allowed to fall freely under the

---

the conception essentially involves the *difference* in relative condition of two bodies or points. For simplicity, the earth is assumed to be at zero potential, and the potential of any particular body is given a definite value, but this is merely a method of briefly stating that a difference, equal to that value, exists between the potential of the body and the potential of the earth.

force of gravity, its velocity at the end of one second is in London approximately 981 cm. per second. A force equal to the *weight* of 1 gramme is therefore 981 dynes.

3. *Work (in ergs) is equal to the force in dynes multiplied by the distance (in centimetres) through which the force is overcome.*

4. *Unit quantity of electricity is such that when placed in air at a distance of* 1 *cm. from a similar quantity it is repelled with unit force* (1 *dyne*).

5. *Unit potential exists at any point when one erg of work is required to bring unit quantity of electricity of similar sign from an infinite distance up to that point in opposition to the force of repulsion.*

6. *The potential at any given point due to a charge is equal to the quantity of the charge divided by its distance from the given point.*

7. *The force of attraction or repulsion between two charges in air is equal to the product of their quantities divided by the square of the distance in cm. separating them.*

8. *The capacity of a conductor or system of conductors is equal to the quantity of the charge divided by the difference of potential existing.* (*Vide* page 187 also.)

The electro-static absolute system of units is based on the definition of unit quantity of electricity (definition 4), whereas the electro-magnetic absolute systems of units is based on the definition of unit magnetic pole and unit current (definition 1 and 2, page 9). From this latter system the practical units are derived.

The electro-static and electro-magnetic absolute units differ in magnitude by a function of the velocity of light, viz., 3×10^{10}, hence to convert an electro-static absolute unit to a practical unit involves the ratio of the electro-static to the electro-magnetic unit, and from the latter to the practical, e.g. 1 electro-static unit of resistance is equal to $\frac{1}{3^2 \times 10^{20}}$ electro-magnetic unit, and 1 ohm is 10^9 electro-magnetic units, hence the electro-static unit is $\frac{1}{9 \times 10^{11}}$ ohm.

Fundamental Facts of Magnetism. The history of magnetism commences with the discovery that a piece of lodestone (now known to be the black oxide of iron, Fe_3O_4) would attract pieces of iron and steel and cause them to adhere to it. A piece of steel stroked in a particular manner by a lodestone acquires similar

properties, and is termed an artificial magnet, in contradistinction to the lodestone or natural magnet. It is, however, only some and not all specimens of magnetite (the technical name for the ore as found) which are natural magnets or lodestones.

If a magnet be suspended so that it can move freely in a horizontal plane it will be found to take up a position which is approximately North and South, and this is the principle of the mariner's compass. It will also be found that the same end of the magnet always points to the North. This end is termed the North-seeking pole* to distinguish it from the other, or South-seeking pole. By experiment it will be found that repulsion takes place between two similar poles (viz., two North-seeking poles or two South-seeking poles), and that attraction results when the poles are of unlike character.

Since a magnet, when freely suspended, points N. and S., the earth is considered to be a magnet with N. and S. poles roughly coincident with the geographical N. and S. poles. The actual position of the North magnetic pole is lat. 70° 5′ N. and long. 96° 46′ W. and of the South magnetic pole 70° 25′ S. and 155° 16′ E. A compass needle in London points about 13° 5′ West of the geographic North, but this value changes slightly from year to year. Following the law of attraction and repulsion between magnetic poles, it will be seen that the earth's N. pole may be termed a true North, or a South-seeking pole. In practice the North-seeking and South-seeking poles of a magnet are usually termed simply N. and S. poles.

The magnetic substances are iron, steel, nickel, and cobalt, but in practice we are concerned only with iron and steel. Iron may be magnetized temporarily

* Strictly, the poles of a magnet are the points near the ends at which the resultant forces of attraction and repulsion are exerted upon any magnet placed near to it. Hadley's *Electricity for Beginners* (Macmillan), p. 56.

by contact with a magnet, but it does not retain its magnetism as does a piece of steel, hence the terms temporary and permanent magnets.

Molecular Theory of Magnetism. Matter consists of an aggregation of particles, and the smallest or ultimate particle which can exist separately as that type of matter is termed a molecule. So small are these molecules that a pin's head contains millions. In any particular lump of matter—a piece of sugar, for example —the constituent molecules are held together by the force of cohesion.

The molecular theory of magnetism* states that every molecule of a magnetic substance is a magnet, and that magnetization consists in facing round the molecular magnets, in opposition to their mutual attractions, so that they act in the same direction, thus—

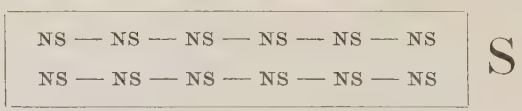

Fig. 1. Arrangement of Molecules—Magnetized Condition

In a piece of steel, once this arrangement has been produced, the forces of attraction and repulsion between the molecules are insufficient to bring about demagnetization, whereas in soft iron, the magnetizing force being removed, the molecules being free to turn at once take up an arrangement which may be depicted thus—

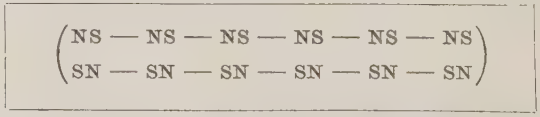

Fig. 2. Arrangement of Molecules—Unmagnetized Condition

It will be observed that in this arrangement the mutual attractions are satisfied, and that a chain is

* *Magnetic Induction in Iron and other Metals*, by J. A. Ewing.

formed in which half the N. poles of molecules point one way and the remainder in the opposite direction, thus producing no external effects.*

Lines of Force. The condition created in the region of a magnet is termed a magnetic field, and its strength is determined by the value of the force of attraction or repulsion which it exerts upon other magnets. It may also be defined as any space where there are lines of magnetic force, or, more simply, " lines of force."

Lines of force are hypothetical lines along which an isolated magnetic pole would move if perfectly free to do so. Such a pole cannot, of course, be obtained and its existence is only postulated for the simplification of the reasoning. It may, however, be remarked that its use in dealing with the mathematical side of the subject is as frequent as it is valuable, and that the transition from the postulated pole to actual conditions is easily accomplished.

The paths of the lines of force proceeding from magnets are readily made apparent by tapping lightly a sheet of paper or cardboard (placed above the magnets) on which iron filings have been sprinkled. The lines of force in passing through the filings cause each one to become a magnet and so " line up " with its neighbours along the lines of force. The filings do not collect along

* *Permanent Magnets in Theory and Practice*, by S. Evershed. First paper, 1920, Vol. 58, *Proc. I.E.E.*, p. 780 ; second paper, 1925, Vol. 63, *Proc. I.E.E.*, p. 725. In the first of these classic papers the author reverts to Ampere's theory that magnetic effects are due to molecular currents circulating round a resistanceless orbit about the molecule and that external magnetic effects are due to orientation precisely as in Ewing's theory. Electrons spinning around the nucleus constitute this molecular current, which renders each molecule a magnet, but the essential difference between magnetic and non-magnetic substances is still a matter of conjecture. It is certainly connected with the structure of the atom and may be ultimately explainable in terms of the arrangement and orientation of electron orbits. The two papers constitute a treatise on magnets and magnet-making to which readers who wish to pursue the subject further are referred.

the magnet itself because iron and steel conduct lines of force vastly better than air, and consequently but few lines stray out of the metal into the surrounding air.

Every line of force is a closed curve, the direction of which is from South to North inside and North to South outside the magnet. Each line may be regarded as tending to repel the lines of force upon either side of it and having a tension along its length. Again, lines of force can never cross each other. Where such a tendency exists, the lines repel each other and form separate and distinct curves. Every line of force tends to shorten itself, and where motion of a system is possible, that motion takes place in such a way as to render the lines as short as possible.

Magnetic Induction. The difference between a magnet and a piece of non-magnetic material is that the magnet possesses lines of force, whereas the non-magnetic material does not; also, that in the latter case, lines passing through it do not render it magnetic, since its molecules are not magnets. If lines pass from right to left through a bar of iron, at the right-hand end of the iron there will be a South, and at the left-hand end a North pole. This statement is identical with that contained in the subsequent paragraph, and if the reader will draw a couple of bars in a straight line with each other—one representing a magnet and the other a piece of iron—he will, by filling in the directions of the lines of force due to the magnet, observe the direction in which they pass through the iron bar, and thus deduce the direction of the induced polarity of that iron bar.

Induction takes place along the lines of force, and *the induced pole is opposite in character to the inducing pole;* or, to give an example, a North pole approached to the right-hand end of an iron bar causes that end to become a South pole, the result being attraction. The attraction between a magnet and a piece of iron

is, therefore, the result of previous induction. A line of force passes just as easily through brass, wood, glass, etc., as through air ; hence the interposition of a piece of copper or other non-magnetic substance does not affect the action of the magnet. From what has been already said on the subject of lines of magnetic force, it will be seen that the molecules of a magnetic substance arrange themselves along the lines, and that to magnetize a piece of steel the magnet should be stroked along in one direction only. The end at which the stroke ceases will be opposite in polarity to the pole with which the steel is rubbed.

Quantitative Values of Magnetic Effects. The various calculations in regard to magnets are based primarily upon the definition of a unit magnetic pole, and for the use of more advanced students a few of the more important definitions and experimental facts are succinctly given below.

1. *A unit magnetic pole is such that when placed, in air, at a distance of* 1 *cm. from a similar pole it is repelled with unit force* (1 *dyne*).

2. *A magnetic field of unit intensity has one line of force per square centimetre passing through it ; it acts on unit pole with unit force.*

The intensity of a magnetic field is defined in Gausses, a unit field being a field of 1 Gauss.

From definition 2 it follows that unit magnetic field (1 Gauss) exists at every point 1 cm. from a unit magnetic pole of infinitely minute size. In other words, 4π lines of force proceed from a unit magnetic pole and one of these lines passes through each square centimetre of the area of an imaginary sphere described with a radius of 1 cm., around the unit pole.

3. *The force of attraction or repulsion (in dynes) between two magnetic poles is equal to the product of their strengths divided by the square of the distance separating them.*

As an example of the way in which these definitions may be employed, imagine that a magnet having a pole strength of 10 units and length 8 cm. is placed with its nearer pole 5 cm. from a magnetic pole of 3 units strength.

$$\text{Force due to nearer pole} = \frac{10 \times 3}{5^2} \text{ dynes.}$$

Force due to more distant pole $= \frac{10 \times 3}{13^2}$ dynes.

Net effect on isolated pole $= \frac{10 \times 3}{5^2} - \frac{10 \times 3}{13^2}$ dynes.

$= 1{\cdot}02$ dynes approx.

The *moment* of a magnet is defined as the product of its pole strength and its length. A rough approximation to the result given above is contained in the statement that the force due to a magnet at a given point, in a straight line with it, is directly proportional to its moment and inversely proportional to the cube of the distance of the centre of the magnet from the given point.

VOLTAIC ELECTRICITY

Broadly, a voltaic cell may be defined as an arrangement which transforms chemical energy into electrical energy. Essentially, such a cell consists of two dissimilar metals immersed in a liquid which will form a chemical compound with one of them. For example, a plate of zinc and a plate of copper placed opposite each other, but not in actual contact, and immersed in dilute sulphuric acid constitute a simple form of voltaic cell; a number of cells properly joined up is termed a battery.

If the outer ends of the zinc and copper plates—termed the poles of the cell—be connected by a length of copper wire an electric current flows through the wire. This is merely another way of saying that the connection of the battery or the cell to the wire produces certain changes in and around the wire, and that to distinguish the condition of this wire from that of a similar piece of wire not connected to a battery the former is said to carry a current. It is particularly important that the reader should realize that his knowledge is of the *effects* of electric currents; detailed discussion as to what constitutes an electric current is beyond the scope of this work.

Turning again to the current-conveying wire, it will

be found that it possesses a magnetic field, and also, by suitably arranging the conditions (for example, by using a cell of sufficient dimensions and a very thin wire), it may also be observed that heat is generated. The latter property of the electric current is used for electric lighting by incandescent lamps, for heating rooms with electric radiators, and for electric cooking and other domestic purposes. In every case in which a current flows along a wire, heat is generated, but often the amount is too small to be measured or observed by any ordinary method. The heating effect of an electric current constitutes one method of measurement. Electrical energy may be measured by the quantity of heat generated, care being taken either to prevent the dissipation of heat beyond the measuring apparatus, or, on the other hand, to facilitate it, and so to obtain the rate of doing work.

The magnetic effect of a current is of vital importance in telegraphy.

A magnetic field exists round any wire carrying an e ectric current, and the lines of force will be found to lie in concentric circles with the wire as common centre in planes at right angles to the length of the wire. This fact can be demonstrated by a current-conveying wire passing through a piece of glass or cardboard upon which iron filings are strewn. The general appearance of the filings, after tapping the glass or cardboard so as to enable the filings to settle into position, is indicated in Fig. 3.

The magnetic condition of space around a conductor conveying current does not consist of lines and spaces between as mapped out. The condition is analogous to the condition of heat round a steam pipe, i.e. continuous but less as the distance increases.

Another experiment consists in plunging the current-conveying wire into the midst of a heap of iron filings. If the current is large enough (40 to 50 amperes is usually desirable with ordinary filings) a quantity of

filings will cling around the wire and remain in position after the wire is lifted clear of the heap. It is necessary here to point out that the effect is produced by the attraction of the filings to each other. Each filing is magnetized, and closed chains are formed right round the wire.

Electric currents differ in strength and in direction. The direction of a current outside the cell is from the

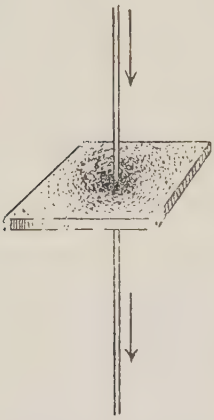

Fig. 3. Iron Filings round a Current-conveying Wire

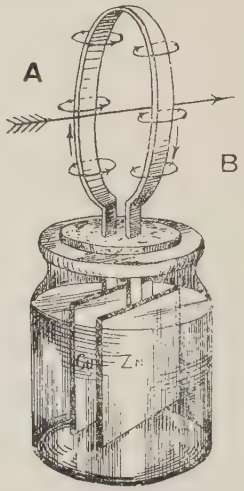

Fig. 4. Illustrates the Relation Between the Direction of a Current and its Magnetic Field

copper pole through the wire to the zinc pole, and the magnetic field is always in absolute accordance with strength and direction of the current.

A current flowing in a downward direction along a wire passing through this page generates lines of force in concentric circles, and the direction of these lines is from left to right above, and from right to left below the wire (i.e. the direction of the lines is the same as the direction in which the hands of a clock move).

Perhaps the simplest rule is to remember that the direction of the current and that of the lines of force bear to each other the same relation as the vertical and rotary motions of a corkscrew.

A few of the lines of force generated in a conductor bent into a loop are shown in Fig. 4 in such a manner that the relation between the direction of the current and the direction of the magnetic field produced is at once apparent.

If a current-conveying wire be placed directly above and parallel to the normal N. and S. position of a compass needle it will be seen that the needle is deflected. If the direction of the current in the wire is from South towards North, the North pole of the compass will be deflected towards the West. If the current is in the opposite direction (N. to S.) the needle will deflect to the East. Again, it will be found that by taking the wire from above and placing it below the needle, the direction of the deflection is reversed. The reason for this change will be apparent on consideration of the direction of the lines of force encircling the wire ; for, if their direction be from right to left below the wire, they must necessarily be in the opposite direction above, just as the hour hand of a clock moves from right to left between 3 and 9 o'clock, and from left to right between 9 and 3 o'clock.

Two rules for memorizing these effects are given, but the second one is to be preferred.

1. Mnemonic *SNOW*, a current passing from *S*outh to *N*orth *O*ver the needle causes the North pole to be deflected to the *W*est.

2. Place the outstretched *right* hand between the wire and the needle, with the palm of the hand facing the needle, so that, were the hand the wire, the current would flow from the wrist to the fingers. The outstretched thumb will then indicate the direction in which the North pole will turn.

The converse of those rules, viz., to determine the

direction of a current from the deflection of a compass needle, is sufficiently obvious.

It will now be well to consider one or two points arising out of the deflection of the compass needle. Normally, the needle lies along the magnetic meridian, and is held in that position by the lines of force due to the earth's magnetic field. The current-conveying wire placed above the needle possesses a magnetic field which, so far as the horizontal plane in which the needle moves when deflected is concerned, is at right angles to the horizontal component of the earth's field. Were the earth's field absent the needle would set itself along the lines of force due to the current at right angles to the wire ; but if both fields are present then the position of the needle is somewhere between the N. and S. position (no deflection) and the E. and W. position (90° deflection). If the fields are equal, then a half-way deflection (45°) will result. The quantitative values of these effects, which will be dealt with later, constitute a method of measuring currents.

Where two magnetic fields whose directions, considered separately, are at right angles to each other—as, for example, those of the earth (S. to N.) and a current-conveying wire (E. to W., or vice versa) –act together in any space the direction of both is modified. The direction of the new or combined field depends upon their relative magnitudes. If equal, then the resultant field is at an angle of 45° from the position of either of them considered alone, and it is along the direction of this resultant field that the compass needle sets itself. Were it possible for two or more lines of force to cut across one another the magnetic field would have several different values at one point, but this is not the case.

Conductors and Insulators. If the poles of a voltaic cell are joined by a dry piece of glass it will be found that no current exists. It is, therefore, clear that glass is a substance that will not permit the effect termed an electric current to take place along it. Such substances are termed non-conductors, or insulators, in contradistinction to conductors, and of all known substances silver conducts electricity most freely, while perfectly dry air is the best insulator. Electrical conductivity is, however, a matter of degree, for, while no substance conducts perfectly, it is certain that no substance is a perfect insulator. The best

conductors are metals in the following order : Silver, copper, gold, zinc, platinum, iron, tin, lead, and mercury. Next come carbon, acids, salt solutions, and water. Taking insulators in the same way, the order is: Dry air, paraffin wax, dry paper, porcelain, ebonite, glass, india-rubber, gutta-percha, oils, mica, silk, wool, marble, celluloid, slate, red fibre. This order is, however, subject to variations in accordance with the condition of the material.

The path, along which a current flows, is termed a circuit, and it is said to be completed when the current is passing.

UNITS

Before electric currents can be compared, standards must be defined in just the same way that the units of length, weight, and time are defined in ordinary commerce.

Electro-motive force stands in much the same relation to electricity as pressure does when applied to water. The different extent to which various substances will permit the passage of a current has already been remarked upon. Another way of expressing the same fact is to say that some conductors offer more *resistance* than others.

A pipe of fixed size will deliver water at a certain rate when a given pressure is applied. An increase in the pressure or an increase in the size of the pipe will result in a corresponding increase in the flow of water through it. Similarly, in an electrical circuit, an increase in the electrical pressure or E.M.F. or a reduction in the resistance of the circuit will result in an increased flow of *current*.

The units of current, electro-motive force, and resistance are as follows—

Current . .	The ampere
Electro-motive force	,, volt
Resistance . .	,, ohm

The OHM is represented by *the resistance offered to an*

unvarying electric current by a column of mercury at the temperature of melting ice (0° *C. or* 32° *F.*) 14·4521 *grammes in mass, of a constant cross sectional area, and of a length of* 106·3 *centimetres.*

This unit represents about the resistance offered by slightly less than $10\frac{1}{4}$ (10·232) yd. of the loop of Cable E. and F.P. $\frac{2}{100}$. It is the resistance offered by about $19\frac{1}{4}$ yd. of 40 lb. bronze line wire loop, or by about 150 yd. of 150 lb. copper line wire loop. (See Chapter XXIV.)

The VOLT is represented by ·6974 $(\frac{1000}{1434})$ *of the electrical pressure at a temperature of* 15° *C. between the poles of the voltaic cell, known as Clark's cell,* set up in accordance with a detailed specification.

The E.M.F. of a Leclanché cell in good condition is about $1\frac{1}{2}$ volts, while that of the Clark cell is rather less (actually 1·434 volts at 15° C.).

The AMPERE is *the current which will flow through a circuit having a resistance of* 1 *ohm when urged by an electro-motive force of* 1 *volt.*

Such a current will deposit silver from a solution of nitrate of silver in water at the rate of ·001118 of a gramme per second. This is the legal definition of a current of 1 ampere, but a specification is also appended stating the details of the method of carrying out the determination.

In telegraph practice the ampere is too large a unit, and it is, therefore, subdivided into "milliamperes," which, as the name implies, means thousandth parts of 1 ampere. This is denoted by the contraction "mA," and 1000 mA would therefore mean 1000 milliamperes, or 1 ampere denoted 1A.

The small Greek letter "ω" was universally employed after figures to denote ohm or ohms. Thus "150 ohms" was written "150ω." Practically all the apparatus at present in use is so marked but the symbol has been allotted for another purpose* and

* Appendix C, "International Symbols."

the capital letter " Ω " has now been definitely accepted to replace it. The use of " O " was rejected as definitely objectionable owing to possible confusion with a nought. The symbol " Ω " should no longer be used to designate megohms or millions of ohms; either the word should be written in full or MΩ should be employed. Thus 10 MΩ means 10 megohms or 10,000,000 ohms. This convention is useful in stating insulation resistances which are usually of this order of magnitude. In the present work " ω " has generally been retained for ohms.

For extremely small resistances such as the resistance between the opposite faces of a unit cube of metal or other highly conductive substances the " microhm " or one millionth of an ohm is very frequently employed. For instance, the expression " 165 microhms " therefore represents $\cdot 000165^{\omega}$.

OHM'S LAW

Ohm discovered that the following relations existed between these units : *The strength of current through any circuit varies directly as the electro-motive force and inversely as the resistance,* or, stated in a more definite manner, the number of amperes flowing through a circuit is equal to the number of volts of electro-motive force divided by the number of ohms of resistance in the entire circuit, or—

$$\text{Current} = \frac{\text{Electro-motive force}}{\text{Resistance}} \text{ i.e. } C = \frac{E}{R}$$

whence $R = \frac{E}{C}$, and $E = C \times R$,

where C, R, and E, are respectively the current, resistance, and electro-motive force in the circuit.

For instance, an E.M.F. of 12 volts applied to a circuit of 6 ohms resistance will produce a current of $\frac{12}{6} = 2$ amperes. If

the E.M.F. in a circuit be 30 volts and the current 10 mA. its resistance must be $\frac{30}{\cdot 010} = 3000$ ohms. If the current is 2 amperes and the resistance is 10 ohms, then the E.M.F. in the circuit will be $10 \times 2 = 20$ volts. These quantities should *all* be expressed in terms of volts, amperes, and ohms.

The units of power and energy may be added here. *The watt is the rate at which work is done when one ampere flows through a conductor with a difference of potential of one volt across the ends of the conductor.*

$$\text{Watts} = E \times C \text{ or } C^2 \times R \text{ or } \frac{E^2}{R}.$$

A kilowatt is equal to 1000 watts.

A so-called 25 candle-power incandescent lamp requiring ·13 amp. upon a 230 volt circuit therefore takes $230 \times \cdot 13 = 30$ watts. As 746 watts are equal to 1 h.p., the lamp is taking approximately $\frac{1}{25}$ of 1 h.p.

The commercial unit in which electrical energy is sold by electric undertakings is known as the Board of Trade unit and is the practical unit of energy. *The Board of Trade unit is equal to* 1000 *watt-hours* (i.e. 1·34 *horse-power for* 1 *hour*).

Twenty of the lamps mentioned above would consume 600 watts, and if burning for 3 hours the energy used would be $600 \times 3 = 1800$ watt-hours, i.e. 1·8 kilowatt-hours, or 1·8 B.T.U. (Board of Trade units).

EFFECTS OF CURRENT AND NOMENCLATURE

At this point it is convenient to define a number of terms in common use and to discuss a little more closely the effects of an electric current. In Fig. 5, four cells, connected in series, send a current through a calorimeter, a voltameter, and an electro-magnet. The four cells constitute a battery and the end zinc plate on the left and the end copper plate on the right constitute the negative and positive poles respectively

of the battery. Since the current flows from copper to zinc outside the cells it will be realized that the current within the cells (shown by the small arrows) must

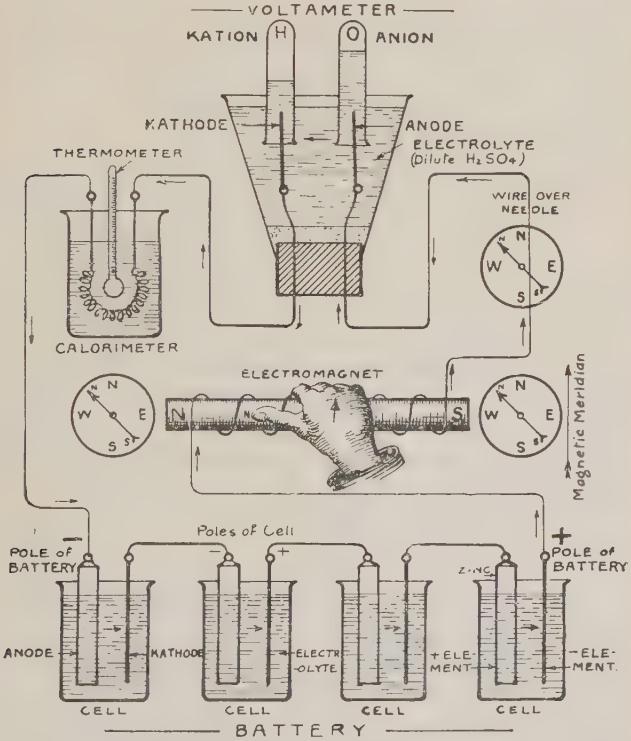

FIG. 5. MAGNETIC, CHEMICAL AND THERMAL EFFECTS OF A CURRENT AND NOMENCLATURE

flow from zinc to copper. This is expressed by saying that zinc is the positive element but the negative pole or terminal, and similarly that the negative element is the positive pole of the cell. The terms frequently employed are anode and kathode, which are respectively defined as the electrodes by which

the current enters and leaves the electrolyte. (This may be memorized by the mnemonic : "When *Ann* comes *in* the *cat* goes *out*.") An electrolyte is any liquid which undergoes electrolysis (i.e. chemical changes) when traversed by a current. The electrodes are the conductors in contact with an electrolyte by means of which the current enters and leaves the electrolyte. An inspection of the figure will furnish examples of each of these terms.

It has already been remarked that an electric current passed through acidulated water will split up the water into its constituent elements oxygen and hydrogen—at the anode, the point at which the current enters the electrolyte, oxygen is given off ; whilst at the kathode double the volume of hydrogen will be evolved. The products of decomposition are termed ions and are called anions or kations, according to whether they are liberated at the anode or the kathode respectively.

Faraday discovered and enunciated the two laws of electrolysis—

1. The amount of chemical action is equal at all points of a circuit ; and

2. The amount of an element (or ion) liberated is proportional to the strength of the current, and to the time during which it flows.

The first law shows that if there are two or more appliances in series the chemical action in each will be equal whatever may be the relative sizes of the appliances. For example, the amount of chemical action in each cell of a Z and a Y dry cell battery connected in series to a given circuit will be equal in each cell large or small. The second law renders it possible to measure the strength of a current by the chemical action of the current. Careful experiment has shown that the coulomb of electricity (i.e. a current of 1 ampere for 1 second, or its equivalent, e.g. 10 mA for 100 seconds) will liberate ·1155 cubic centimetres of

hydrogen and half that quantity of oxygen. The measurement of a current by this means involves a series of very elaborate precautions and consequent uncertainty as to the strict accuracy of the result.

The ampere is defined legally as the current which will deposit ·001118 of a gramme of silver per second from a solution of nitrate of silver in water. In the experiment both electrodes are of silver and the anode combines with the electrolyte to form nitrate of silver, while the silver passes on through the electrolyte until it reaches the kathode upon which it is deposited. It will be observed that the silver follows the direction of the current and that in this instance the anode loses in weight an amount equal to the silver deposited on the kathode. In the case of a battery, zinc is consumed at a definite rate, which accords with the value of the current, viz., ·0003388 grammes per second per ampere.

Attention has been called to the fact that heat is generated by the passage of a current. Heat is generated wherever and whenever resistance is offered to the passage of a current, and, therefore, it will be generated within a cell as well as outside in the external circuit. The calorimeter consists of a coil of wire of considerable resistance immersed in water and so arranged as to prevent the radiation of the heat generated. On the passage of a current the spiral of wire is heated and the water warmed. Knowing the quantity of heat, the resistance of the spiral, and the time during which the current has passed, it is easy to calculate the value of the current. The quantity of heat (in calories) is defined as the weight of water used multiplied by the rise in temperature. The following relation exists—

$$\text{Heat} = \frac{(\text{Current})^2 \times \text{Resistance} \times \text{Time}}{4{\cdot}2}$$

The unit in the case of heat is the calorie and is the

amount of heat required to raise 1 gramme of water 1° C. Current, resistance, and time are respectively in amperes, ohms, and seconds. The number 4·2 has to be used because the calorie is not a C.G.S. unit. Perhaps the following numerical examples* will render these points clear.

EXAMPLE 1. Compare the amount of heat generated in a circuit of 10ω resistance by a current of 5 amp. in 3 minutes with that generated by 100 milliamp. in 18 seconds in a 50ω circuit.

In the first circuit,

$$\text{Heat} = \frac{5^2 \times 10 \times 180}{4{\cdot}2} = 10714 \text{ calories.}$$

In the second circuit,

$$\text{Heat} = \frac{{\cdot}1^2 \times 50 \times 18}{4{\cdot}2} = 2{\cdot}14 \text{ calories.}$$

EXAMPLE 2. What current must traverse a wire of $2{\cdot}5\omega$ resistance so that the heat developed may raise 2 kilogrammes (2000 grammes) of water from a temperature of 15° C. to boiling point in 10 minutes ?

$$\text{Heat required} = 2000 \times (100 - 15) = 170{,}000 \text{ calories.}$$

$$170{,}000 = \frac{(\text{Current})^2 \times 2{\cdot}5 \times 600}{4{\cdot}2}$$

$$\therefore (\text{Current})^2 = \frac{170{,}000 \times 4{\cdot}2}{2{\cdot}5 \times 600} = 476$$

whence Current = 21·82 amperes.

* *Arithmetic of Teleyraphy and Telephony*, by T. E. Herbert and R. G. de Wardt (Pitman), provides questions and answers to similar problems.

CHAPTER I

PRIMARY CELLS

An electric current represents a certain amount of energy. It is not in the power of man to *create* energy, but the energy with which the world is endowed may be applied to effect desired ends. A voltaic cell may be defined as a piece of apparatus which converts chemical energy into electrical energy. A cell supplies electrical energy, in the form of an electric current, by taking an amount of chemical energy, equal to the electrical energy, from the constituent parts of the cell.

If the poles of a simple cell, consisting of a plate of zinc and a plate of copper immersed in dilute sulphuric acid, be connected externally by a conductor a current flows through the circuit as the result of chemical action within the cell. Zinc is dissolved into sulphate of zinc, whilst hydrogen gas is given off from the surface of the copper plate. This action may be represented thus*—

Before the poles are connected — After connection

Zn	$+$	H_2SO_4	$=$	$ZnSO_4$	$+$	H_2
One atom of zinc	combines with	One molecule of sulphuric acid	to form	One molecule of zinc sulphate	and	One molecule of hydrogen

The copper plate is not acted upon by the chemical constituents of the cell, and is, therefore, omitted from the equation. The electro-positive hydrogen ion passes on through the solution until it reaches the copper plate where it is deposited.

The hydrogen does not pass from the positive element through the electrolyte in the form of bubbles. Upon being liberated by the combination of zinc with

* The reader who has no knowledge of chemistry is advised to read *Introductory Chemistry* by Gregory and Simmons (MacMillan), Chapters I and XVII. Its published price is 2s.

the sulphuric acid it immediately combines with the SO_4 of an adjacent molecule of H_2SO_4, thus liberating the hydrogen from this molecule. The action is repeated across the liquid until the negative element is reached, when the hydrogen comes off in the form of visible bubbles. No sign of the action is to be seen in the liquid which intervenes between the two elements of the cell.

Polarization. The current produced by such a cell rapidly decreases until finally it almost ceases. This phenomenon is termed *polarization*. Hydrogen is electro-positive and, therefore, tends to re-combine with the zinc sulphate and so to deposit zinc on the negative element. The statement of this tendency is merely another way of saying that an E.M.F. is set up in opposition to the prime E.M.F. of the cell. The E.M.F. of the cell under such conditions is seriously decreased. In a simple cell such as that considered it was found that the E.M.F. fell from ·85 volt to ·54 volt in 1 minute after its terminals were joined through a resistance of 10^{ω} and to ·355 volt at the end of 5 minutes. It will thus be realized that polarization is an exceedingly serious matter and that its prevention is imperative if anything even remotely resembling a steady current is to be obtained.

In order further to illustrate the phenomenon the case of a zinc and a copper plate immersed in a solution of zinc sulphate may be considered. In this case the action is as follows—

Zn	+	$ZnSO_4$	=	$ZnSO_4$	+	Zn
One atom of zinc	combines with	One molecule of zinc sulphate	to form	One molecule of zinc sulphate	and	One atom of zinc

That is to say, the SO_4 of the zinc sulphate solution would combine with the zinc plate to form zinc sulphate which would dissolve in the solution. The zinc liberated would pass on through the solution until it reached

the copper plate, where it would be deposited. In this case it will be evident that ultimately the cell will become equivalent to two zinc plates immersed in a solution of zinc sulphate, and that at this point all current must cease. In this instance zinc is the polarizing ion whereas in most types of primary cell hydrogen is responsible for the trouble. The surface of the plate being covered with hydrogen reduces the area in contact with the electrolyte, which increases the internal resistance of the cell (see page 37), but this effect is of small consequence in comparison with the effect already described.

The prevention of polarization is effected by surrounding the negative element with some chemical compound which will unite with the polarizing ion (usually hydrogen) as fast as it is formed, and so remove it continuously.

The positive metal or element is always the one which is acted on or consumed by the liquid. The liquid which consumes the zinc, when the circuit is completed, is called the *excitant*, as opposed to the liquid or substance taking up the hydrogen, which is called the *depolarizer*. The hydrogen causes polarization unless means are employed to get rid of it, or, in other words, to *de*polarize the cell.

Local Action. There is yet another defect to which the simple cell is subject, known as local action. Commercial zinc contains a number of impurities such as iron, tin, arsenic, etc., etc. ; thus, in the zinc plate itself minute cells are formed. Imagine a fragment of tin partially embedded in the zinc. The zinc and tin are in contact, and the outer surfaces of the zinc and tin are bridged by a liquid arc of electrolyte, thus forming a miniature voltaic cell. In this way the zinc is consumed without any equivalent of work in the external circuit, and the action is thus sheer waste of material. The use of chemically pure zinc is impracticable on account of its cost but the desired result may

be attained by the process termed "amalgamation," which consists in coating the zinc with mercury, when the plate behaves as though it was chemically pure. In practice, a certain amount of mercury is added to the zinc when it is being cast into the form of a rod.

Although this remedy has been known since 1828 the theory of its action is still undecided. It has been suggested that, since zinc amalgamates so readily, the zinc at once passes to the surface of the amalgam, whereas the impurities, being less readily amalgamated, do not pass to the surface. The amalgam would thus act as a filter, but as soon as it became thin the impurities would project and local action result, which is found to be the case.

This view of the matter is satisfactory so far as the impurities are concerned, but it fails to explain the absence of local action between the zinc and the mercury.*

The E.M.F. of any particular type of cell is independent of its dimensions, but its internal resistance is dependent upon them, and generally the larger the cell (or, strictly speaking, the larger the two elements), the lower is its internal resistance, and also the greater is the amount of electrical energy which may be obtained for a single charge. These points are, however, reverted to later.

Leclanché Cells. The containing vessel of this cell (Fig. 6) consists of a square glass jar, ending in an almost circular collar, shaped to admit the zinc rod which forms the positive element. The rod is cast on to a copper wire, which is usually insulated where it emerges from the zinc and forms one terminal of the cell. The collar and a portion of the jar itself are usually very heavily coated with ozokerit to arrest the creeping of the salt. Inside the jar is placed a circular porous pot containing the negative element, a carbon plate, and the depolarizer, manganese dioxide. It is, of course,

* *Primary Batteries*, by W. R. Cooper.

essential that the porous pot shall be wet, in order to permit the passage of the current through the cell.

At one time it was laid down as an essential condition that the form of manganese dioxide termed " pebble " should be used, and that it should be free from dust. But it was discovered by J. G. Lucas* and proved by exhaustive researches that the best results

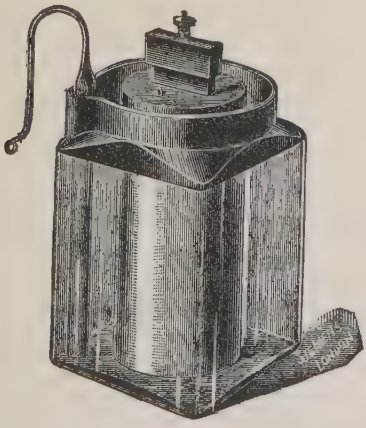

Fig. 6. Porous Pot Form of Leclanché Cell

Fig. 7. No. O " Sack " Leclanché Element

are obtained by using powdered commercial manganese dioxide which will pass through a sieve of 50, but not through a sieve of 60, meshes to the inch.

The top of the carbon plate is capped with a heavy lead lug carrying a brass terminal. In order to arrest injurious affection of the lead lug and its terminal, the lug and a small part of the upper portion of the plate are thickly coated with paint. The top of the porous pot is sealed over with the carbon plate in position, but a vent or vents are left.

* " Life and Behaviour of Primary Batteries used for Telephone Purposes," by J. G. Lucas. Paper read before the Institution of Post Office Electrical Engineers on 12th December, 1910.

The exciting fluid is a solution of salammoniac (ammonium chloride) contained in the outer jar.

As will be seen when considering the chemical actions which take place during the discharge of a Leclanché cell free ammonia gas (NH_3) is generated, and this has a deleterious effect upon metal work and upon the acid solution in any adjacent secondary cells in the battery room. The evolution of this gas necessitates free ventilation in any battery compartment which may be used, and evaporation of the solution is, therefore, facilitated. In order to permit a cell to be sealed, with the object of thereby retarding evaporation of the solution, manganese chloride is substituted for ammonium chloride in the case of batteries where the time of discharge extends over several months. With the manganese chloride excitant no free gases appear to be evolved. The effect of using manganese chloride is to produce a slightly higher E.M.F.

For heavy discharges, ammonium chloride is more efficient than manganese chloride, but for low rates of discharge they are equal in efficiency. When ammonium chloride is used, provision must be made for the escape of the ammonia gas which is liberated during the operation of the cell, and, consequently, the solution is free to evaporate.

With manganese chloride as the electrolyte, no appreciable amount of gas is given off, and, therefore, the cells can be sealed, thereby practically stopping evaporation, and preventing the oxidation which takes place when manganese chloride, whether in crystal or solution form is exposed to the atmosphere. If a cell containing manganese chloride is not sealed, the zinc rod becomes coated with an oxide which has the effect of increasing the internal resistance.

J. G. Lucas, in his historic paper, showed that the resistance of a Leclanché cell does not vary seriously in proportion to the size of the zinc used. In a typical experiment it was found that a Leclanché cell with a

circular zinc having an area of 50 sq. in. immersed in the solution gave an internal resistance of $\cdot 86^{\omega}$, and with a rod zinc with an immersed area of 8 sq. in., an internal resistance of but $\cdot 96^{\omega}$, whilst on reducing the immersed area to 4 sq. in. the resistance was raised only to $1 \cdot 05^{\omega}$. The explanation of these results lies in the fact that the major part of the internal resistance of the cell lies between the outside of the porous pot and the carbon. In the case cited this would amount to about $\cdot 75^{\omega}$, and it will, therefore, be recognized that it would not be possible solely by increasing the size or area of the zinc to reduce the resistance of the cell below this figure. For No. 0 cells two rods are used for reasons connected with the current density of discharge from these large cells.

A typical zinc rod is shown in Fig. 8. It has been found that a tapered zinc of this shape is more economical than the ordinary type of rod.

In making up the cell with powdered manganese dioxide, the latter should be moistened with water or with a weak solution of salammoniac, and tamped as firmly as possible in position in the porous pot so as to form, practically, a solid mass around the carbon plate. When this is done, there is no difficulty in obtaining as low an internal resistance as $\cdot 5^{\omega}$ with the No. 1 size of cell equipped with a rod zinc. It need only be added that in no type of Leclanché cell is there any appreciable local action.

FIG. 8
Leclanché Cell Taper Zinc Rod. (Siemens)

The powdered manganese cell is far more efficient than the agglomerate types of cell in which the porous pot is dispensed with by making up the depolarizer in slabs or rods secured to the carbon. In the Sack form of cell, the porous pot, the only function of which is to maintain the depolarizer in intimate contact

with the carbon, is replaced by a wrapping of textile fabric reinforced by a string lapping (Fig. 7, page 27).

Chemical Action. When the cell is thus made up there will be no action whatever, as the salammoniac will not attack the zinc, in fact it will not have the slightest effect when the circuit is not closed. When the circuit *is* closed, the chemical compounds are entirely altered in their distribution. Salammoniac is a compound of ammonium and chlorine, and is represented by NH_4Cl (1 atom each of nitrogen and chlorine, together with 4 atoms of hydrogen). On closing the external circuit, the zinc and the ammonium in the salammoniac change places, and thus part of the zinc will be consumed to form zinc chloride (a substance that readily dissolves in the salammoniac solution), ammonia gas (which combines with water to form ammonium hydrate NH_4HO) and hydrogen which is set free. This hydrogen, which appears at the carbon plate, must be removed in order that it may not give rise to polarization. The depolarizer used in the Leclanché cell is, as previously stated, the manganese dioxide packed round the carbon plate. Immediately the hydrogen is liberated it combines with the oxygen of the manganese to form water. The action may be stated thus—

Outer cell—

	Zn	$+$	$2NH_4Cl$					
	One atom of zinc	combines with	Two molecules of salammoniac					
$=$	$Zn\,Cl_2$	$+$	$2NH_3$	$+$	H_2			
to form	One molecule of zinc chloride	and	Two molecules of ammonia gas	and	One molecule of hydrogen			

Inner cell—

H_2	$+$	$2MnO_2$	$=$	Mn_2O_3	$+$	H_2O	
One molecule of hydrogen	combines with	Two molecules of manganese dioxide	to form	One molecule of manganese sesquioxide	and	One molecule of water	

In the inner cell it will be seen that the two molecules of manganese dioxide taking part in the reaction have between them given up one atom of oxygen to the hydrogen, thus forming water. On the other hand, the two molecules of manganese dioxide have become one molecule of a lower oxide, namely, Mn_2O_3, the sesquioxide of manganese.

The solution is formed by adding from 2 to 4 oz. of compressed salammoniac lozenges, called " voltoids," to the pint of water. Voltoids, which weigh 16 to the ounce, dissolve very readily in warm water, especially if they are crushed ; but with cold water considerable stirring is necessary. For lightly worked cells 2 oz. (32 voltoids) is adequate, but for heavily worked cells the amount should be increased to 4 oz. per pint of water. The effect of too weak a solution is to hasten the formation of crystals on the zinc, whilst too strong a solution leads to creeping of the solution. The early formation of large crystals on the zinc indicates that relatively large currents are being taken from the cell, whilst small currents continued over long periods result in smaller crystals.

It has been found that the addition of zinc chloride to the excitant of a Leclanché wet cell reduces its polarization considerably, and tends materially to reduce the incrustation of salts in the cell elements. The Post Office is now using a mixture of 15 per cent zinc chloride and 85 per cent salammoniac, again in the form of a lozenge, which is stamped with the word " Zinkhams " on one side and " Poisonous " on the other side (zinc chloride is poisonous if taken internally).

The chemical action of a Leclanché cell with manganese chloride as excitant is as follows—

Before the poles are connected— After connection—

Zn	+	$MnCl_2$	=	$ZnCl_2$	+	Mn
One atom of zinc	combines with	One molecule of manganese chloride	to form	One molecule of zinc chloride	and	One atom of manganese

At the negative element—

Mn	+	$3MnO_2$	=	$2Mn_2O_3$
One atom of manganese	combines with	Three molecules of manganese dioxide	to form	Two molecules of manganese sesquioxide

It will be observed that no gas is liberated as the result of this action, and that manganese is the polarizing ion.

Dry Cells. A dry cell may be defined as a cell in which the exciting and depolarizing materials are applied in the form of thick damp pastes, which in comparison with the fluid electrolyte of an ordinary cell perhaps justifies or, at all events, extenuates, the generic title given to this class of cell. If, however, the pastes were actually dry the cell would, by reason of its enormously high internal resistance, be incapable of supplying a current. As a matter of fact cells frequently fail after some little service because they dry up—a condition indicated by a rapid rise in internal resistance.

Every dry cell is a modification of the Leclanché cell and has precisely the same electro-chemical reactions, a fact which is definitely established by the equality of the E.M.F.'s of the Leclanché and dry cells.

All dry cells consist of a zinc containing vessel from $13\frac{1}{2}$ to 22 mils. in thickness, with a carbon plate or rod, either cylindrical or fluted, to give greater area of contact with the depolarizer. The carbon is insulated by a layer of paper or wood, or given a $\frac{1}{2}$ in. clearance from the bottom of the zinc vessel. The general composition of the two pastes is 10 lb. of MnO_2, 10 lb. of carbon or graphite or a mixture of both, 2 lb. of NH_4Cl, 1 lb. of $ZnCl_2$, and sufficient water to give the proper amount of electrolyte to the cell. But the proportions vary, even with the same manufacturers, for different sizes of cell. Various additions are made by the manufacturers, such as starch or other forms of paste, with a view to retaining a wet condition and improving the contact between the zinc and the white or exciting paste, and to promote action throughout the discharge.

The efficiency of the cell depends very largely upon the purity of the charging materials and upon its contact with the conductive carbon.*

The Siemens Dry Cell (Figs. 9 and 10). This cell has been chosen for detailed description as typical. It

FIG. 9. SIEMENS DRY CELL

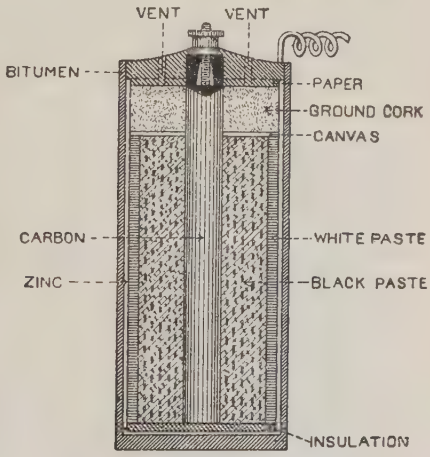

FIG. 10. SECTION OF A SIEMENS DRY CELL

consists of a zinc cylinder of a thickness suitable to the size of the cell, with a connection wire attached to the inside of the cylinder. This latter contains a carbon rod, surrounded by a depolarizer, composed of a mixture of powdered peroxide of manganese and carbon intimately mixed and pressed into close contact with the carbon rod. A brass terminal is fixed into the top of the carbon in the following manner : A vertical hole is provided in the rod into which the pin of the terminal is inserted, and a molten alloy, composed of bismuth, lead, and tin, is poured around the pin

* American Electrochemical Society, paper, "Certain characteristics of Dry Cells," by C. F. Burgess and C. Hambuechen. *Electrician*, 12th August, 1910, p. 743.

As this alloy expands slightly in cooling, it establishes a perfect contact between the pin and the carbon. An exciting paste composed of plaster of Paris and flour mixed with a solution of ammonium chloride surrounds the depolarizer. A space is provided in the upper part of the cell to receive the gases and water which are formed during the working of the cell, and this space is filled with ground cork as an absorbent for the moisture. The cell is sealed at the top with a layer of bitumen. Small holes are provided for the escape of the gases ; their utility is somewhat doubtful since, if effective, they would carry off the moisture and so cause the cell to dry up earlier than it does. The cell is contained in a strong cardboard box impregnated with paraffin wax, which makes it damp-proof, and thus insulates the cell.

Other Dry Cells. The E.C.C. cell has a flat carbon plate, and contact between the carbon and the bottom of the container is averted by covering the bottom with a layer of insulating material. In the Hellesen cell the negative element is a hollow circular carbon, the interior of which is filled with silicated cotton.

Dry cells in two sizes are in general use by the Post Office, viz. " Y," the circular cell of about 40 ampere-hours capacity, and the large square " Z " cell with a capacity of 140 ampere-hours. A very small square cell is employed for testing purposes and for the speaking battery on portable telephones.

Standard Cells. A particular combination of materials in a cell will always produce the same E.M.F. provided the materials are exactly alike. In the form of cell invented by Latimer Clark it is a *sine qua non* that all the materials employed shall be chemically pure. Under these conditions the E.M.F. of the cell is 1·434 volts at 15° C. The cell is usually very small, and is often made in a short wide test tube. Into the bottom of the test tube a short piece of platinum wire is fused. The outer part of this wire forms the positive terminal, and the inner serves to make connection with the negative element, metallic mercury, which covers it. Above the mercury

a thick paste of mercurous sulphate is spread, and above this is a paste of zinc sulphate into which a zinc rod dips. The zinc rod passes through the cork or bung, and the whole arrangement is sealed.

The chemical action of the cell is due to the SO_4 of the exciting fluid (zinc sulphate) combining with the positive element to form zinc sulphate and liberating zinc which combines with the mercurous sulphate to form zinc sulphate and mercury. The mercury so formed merely adds to the quantity already present. There is a very large number of modifications

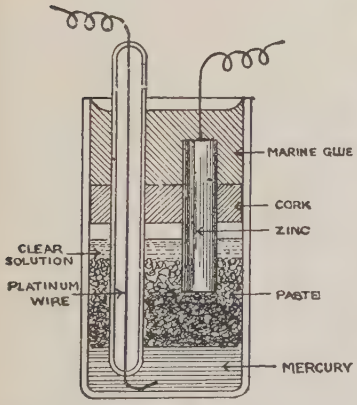

FIG. 11. CLARK STANDARD CELL (Full Size)

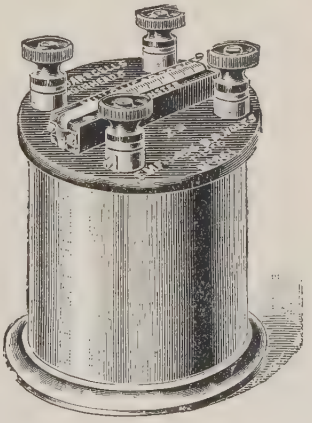

FIG. 12. PAIR OF CLARK CELLS AND THERMOMETER

of the Clark cell in existence, but in principle they do not vary at all. The final form given to such a cell is illustrated in Fig. 12, and it will be noticed that a thermometer has been added for ascertaining the temperature of the cells, since this has an important influence upon the value of the E.M.F.

A full size section of a cell is shown in Fig. 11, whilst the adjacent figure shows the general appearance of a pair of cells mounted in the usual way with a thermometer (Fig. 12).

The Board of Trade specification for the preparation of the cell details the manner in which the materials of the cell shall be prepared. It directs that the zinc and mercurous sulphates shall be mixed together in the form of a paste and ensures the formation of saturated solutions of zinc and mercurous sulphates in water.

Here it may be convenient to state that a standard cell which is required for accurate work should only be used to produce a current through very high resistances (i.e. resistances of the order of 100,000ω). Even then, the current should only be maintained for the shortest possible time. Neglect of these precautions entails inaccuracy of the assumed E.M.F.

Ideal Cell. There is no form of primary cell which fulfils all the conditions enumerated below—

1. High E.M.F.
2. Low internal resistance.
3. Absence of polarization.
4. Absence of local action.
5. Cost of the cell small.
6. Cost of charging small.
7. Amount of energy per charge should be large.
8. Attention required should be little.
9. No injurious fumes should be given off.
10. The materials should be easily and safely handled.
11. Dimensions as small as possible.

Conditions 6 and 7 mean that the cost of a given quantity of electrical energy should be as low as possible, and conditions 7 and 8 specify that the labour cost of maintenance shall be small.

Leclanché cells charged with powdered manganese dioxide more nearly approach these conditions than any other form of cell. Indeed, this type of cell, and dry cells, are the only primary cells used by the Post Office.

CHARACTERISTICS AND USE OF CELLS

The E.M.F. of a cell decreases and the internal resistance increases as the cell becomes exhausted, and it is, therefore, necessary to define the point at which the cell should be considered faulty. Again, bad materials or hard porous pots adversely affect the E.M.F. and internal resistance.

A cell is considered faulty if its E.M.F. falls below 1 volt or if its internal resistance exceeds 2ω, save in

the case of the 2A cell, where a maximum internal resistance of 3^{ω} is permissible.

High internal resistance is caused by insufficient solution, the zinc rod inadequately immersed or covered with crystals, loose packing of the carbon and manganese mixture, a hard porous pot or one clogged with salts, or a defective contact between the carbon and the terminal.

Leclanché cells with granular manganese dioxide polarize if heavily worked, since the hydrogen appears at the carbon plate more readily than the manganese can dispose of it. With intervals of rest or for small currents the cell possesses many advantages, notably the entire absence of local action when not in use, and the very small amount of attention necessary.

On the other hand, Leclanché cells charged with powdered manganese dioxide are comparatively steady. In this connection some extraordinary results are given by J. G. Lucas; for example, a Leclanché cell made up with *granular* manganese dioxide was discharged for five hours per day, six days per week, at a mean current of 41·6 mA until the voltage had fallen to 1^{v}, by which time 7 watt-hours had been obtained. A similar cell, excepting that it was charged with *powdered* manganese dioxide, was discharged under the same conditions and gave 77·5 watt-hours before the voltage had fallen to 1^{v}. At higher current discharge rates the disparity between the two types is shown to be even greater. At a discharge rate of 100 mA the powdered manganese dioxide cells gave an output fifteen times greater than the granular dioxide cell, and at ·5 ampere, thirty times greater.

The greater effectiveness of powdered, as compared with pebble, manganese is due to the fact that the manganese ceases to depolarize when its outer surface has been converted into sesquioxide. That there is within this outer layer a quantity of unchanged dioxide may be proved by powdering the pebbles and replacing them in the porous pot, when it will be found that its depolarizing power is restored. By powdering the manganese a very much greater effective area of depolarizing surface per unit quantity of dioxide is produced.

For example, if a cube be cut into eight equal cubes, the total area of their outer surfaces is twice that of the original cube.

Size of Cells. The E.M.F. of a cell is entirely independent of its dimensions, so that a cell consisting of a grain of zinc and a copper percussion cap would have just the same E.M.F. as a cell composed of the same materials, but as large as a Lancashire boiler. The internal resistances in these two cases would differ very widely, as also would the amount of electrical energy obtainable from each. The quantity of energy obtainable from any cell is the product of its average E.M.F., its average current, and the time that it supplies that current. The actual value obtained will differ considerably according to the conditions chosen.

The method adopted by the Post Office takes account of the differences in the dimensions of the various cells tested. Given two cells of similar type but of different sizes, the larger cell will furnish a given current for a longer period than the smaller one. Not only so, but, at any period during the discharge, the larger cell is subjected to a less severe test, since its resources (i.e. the quantities of active material) are much greater.

The capacities of the various sizes of Leclanché cell in ampere-hours decrease, as with every other type of cell, as the current discharge rate is increased. The extent of the variation is indicated in the table on page 39.

The method of testing consists in discharging the cell for 5 hours per day, 6 days per week, through a $CuSO_4$ electrolytic cell at a mean rate corresponding to the size of the cell (e.g. 50 mA for a No. 1 or a Y dry cell). The ampere-hours are computed from the increase in the weight of the copper cathode of the electrolytic cell.

For intermittent discharges, a mean value may be taken within reasonable limits, e.g. the ampere hour capacity of a cell will be approximately the same

AMPERE-HOUR CAPACITIES OF CELLS AT VARIOUS RATES OF DISCHARGE

Discharge Rate in mA, 5 hours per day, 6 days a week	Type of Cell and capacity in Ampere hours				
	No. 0	No. 1	No. 2A	Dry Y	Dry Z
50	215	50	20	40	150
100	180	42	15	36	135
200	135	30	10	27	100

whether it be discharged continuously at, say, 50 milliamperes, or for alternate intervals and periods of 10 minutes at the same discharge rate; the only difference being that it would take twice as long to carry out the test in the latter case.

Contrary to the behaviour of Leclanché and other wet cells, dry cells, when worked at small discharge rates extending over a long period, give a lower ampere-hour capacity than the rated values. This is due to the tendency of the cells to dry out which entails their rejection owing to high internal resistance before the elements can be fully used up.

The internal resistance of a cell is only roughly proportionate to its size when the cell is of homogeneous construction. In the case of the simple zinc-copper-dilute sulphuric acid cell, for example, the rule holds good, but in the case of the Leclanché and dry cells an increase in the size of the cell means that, although the areas of the electrodes are increased, the distance between the zinc and carbon plates is also increased, and the resistance, therefore, tends to remain uniform. The relationship between area, distance, and internal resistance will be fully understood after consideration of the principles enunciated upon page 62.

The Post Office standard of maintenance is: (i) a maximum internal resistance of 3^{ω} per cell for the No. 2A size, and 2^{ω} for No. 1 and No. 0; for the Y

LECLANCHÉ CELLS (E.M.F. WHEN NEW, 1·55V; MINIMUM 1V.)

Type	Max. Internal Resistance, ohms	Electrolyte	Carbon and Manganese Mixture	Dimensions		Ampere hour capacity at 5 hours per day for 6 days a week	Daily Output for which employed, ampere hours	Purposes for which Used
				Height	Diameter			
No. 0 2 zinc rods	2	8 oz. NH_4Cl	4 lb. 12 oz.	9¼ in.	6½ in.	180 AH at 100 mA	·5 to 1	Quadruplex, high speed long duplex universal and central battery systems.
No. 1	2	4 oz. NH_4Cl	1 lb. 1 oz.	9 in.	5 in.	50 AH at 50 mA	·1 to ·5	Sounders simplex and duplex; local batteries generally.
No. 2A	3	4 oz. $MnCl_2$	10 oz.	7¼ in.	3½ in. side	25 AH at 20 mA	Less than ·1	Telephone-speaking batteries, D.P.S., single needle, bells, etc., for minor purposes generally.
Y	·5	—	—	7 in.	2⅝ in.	40 AH at 50 mA	—	Special events and where wet cells cannot be accommodated.
Z	·5	—	—	8¼ in.	4½ in. side	125 AH at 140 mA	—	

Note. Cells should not be permitted to deliver current for more than a few minutes at peak loads exceeding 50 mA for 2A, 100 mA for No. 1, or 200 mA for No. 0. Where these rates are exceeded, the next larger size of cell should be provided.

and Z sizes of dry cell the figure is $\cdot 5^{\omega}$; and (ii) a minimum E.M.F. of 1 volt at any period of the normal discharge.

The required conditions for each form or size of new cells are stated on page 40.

It may be remarked that the internal resistance of a battery affects the speed of working of a circuit (*vide* Appendix A). If too low the transmitter sparks, whilst too high a value reduces the working speed.

Dry cells possess the advantage of portability, and are eminently suitable for special arrangements. Indeed, they may be employed for almost any purpose. Since the internal resistance is very low a 10^{ω} resistance coil is placed in every 10-cell box of Y cells so that excessive currents may not be produced. If the 10^{ω} coils were omitted when the cells were used in conjunction with a Wheatstone transmitter, the excessive sparking would at once put the transmitter out of action.

CHAPTER II

*CALCULATIONS IN CONNECTION WITH CIRCUITS AND CONDUCTORS**

PART I.—ARRANGEMENT OF CELLS

THERE are three ways in which cells may be arranged, firstly in series, secondly in parallel, and thirdly in parallel-series or multiple arc, this method being a combination of the first and second methods.

Cells in Series. The series method consists in connecting the positive pole of the first cell to the negative pole of the second cell, and connecting the positive of

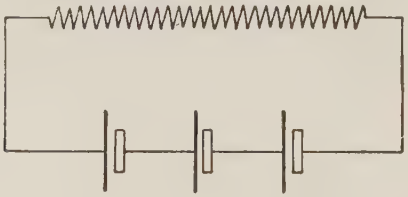

FIG. 13. CELLS IN SERIES

the second to the negative of the third, leaving the latter's positive pole free. The zinc of the first cell and the carbon of the last cell form the poles of the battery. The conventional symbol universally employed to denote a battery consists of a long thin stroke to represent the positive pole of a cell and a short thick line or a short outlined oblong to represent the negative pole. Three cells, as illustrated in Fig. 13, are joined up in series, and it will be observed that in this case the cells all tend to send their current in the same direction. Each cell, therefore, adds its pressure

* *The Arithmetic of Telegraphy and Telephony*, by T. E. Herbert and R. G. de Wardt (Pitman), provides an account of the fundamental rules of arithmetic required together with questions, examples, and answers to numerical problems met with in Grade I Telegraphy and Telephony.

to that of the others, but, in so doing, also adds its own internal resistance. The total E.M.F. produced by a battery, consisting of a number of cells joined in series, is equal to the E.M.F. of one cell multiplied by the number of cells in series, and the total internal resistance is equal to the internal resistance of one cell multiplied by the number of cells in series.

If the E.M.F. and internal resistance of each of the three cells shown in Fig. 13 are respectively 1 volt and

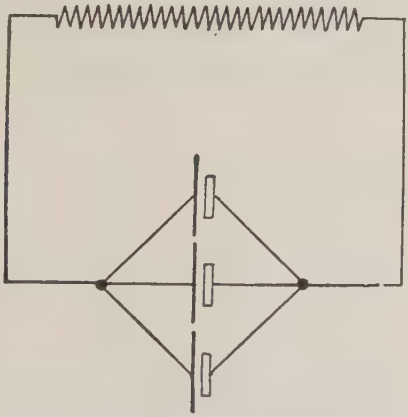

FIG. 14. CELLS IN PARALLEL

6 ohms the total E.M.F. of the battery will be $1 \times 3 = 3$ volts, and its internal resistance will be $6 \times 3 = 18\omega$.

Cells in Parallel. The parallel method consists in joining all the positive poles together and similarly connecting all the negative poles. The circuit to be energized is then joined between the grouped positive and negative poles of the cells. In this case the pressures are not cumulative as in the series method. The total E.M.F. of the arrangement is the E.M.F. of one cell, but the total internal resistance is the internal resistance of one cell divided by the number in parallel. For instance, if the three cells shown in Fig. 14 each

have an E.M.F. of 1 volt and an internal resistance of 6 ohms, the total E.M.F. and internal resistance of the arrangement will be respectively 1 volt and $6^{\omega} \div 3$ i.e. 2 ohms.

The total current flowing through the external circuit is provided in equal proportions by the three cells and, therefore, the output of current from each cell is reduced to one-third. This may be of importance where a heavy current is required.

Cells in Multiple Arc. The parallel-series or multiple-arc method of joining up cells consists in

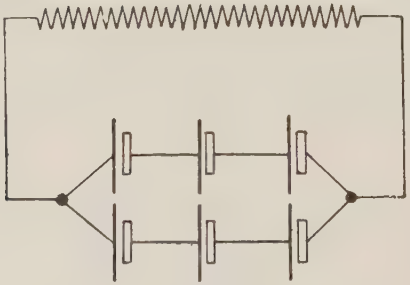

Fig. 15. Cells in Multiple Arc

putting in parallel two or more batteries, each consisting of an equal number of cells joined in series. In Fig. 15 six cells have been connected up in multiple arc. The arrangement obviously consists of two batteries, each of three cells in series, connected in parallel. Using the same values as before for the E.M.F. and internal resistance per cell, it will be seen that the total E.M.F. and total internal resistance of either of the three-cell batteries separately considered will be as before (Fig. 13), 3 volts and 18^{ω} respectively. The question now becomes—what will be the effect of putting two such batteries in parallel ? The rule given for cells in parallel may be applied to batteries in parallel, and the answer is therefore—

Total E.M.F. = that of one battery, viz. 3 volts.

Total internal resistance = that of one battery divided by the number of similar batteries in parallel,

i.e. $$\frac{18^{\omega}}{2} = 9^{\omega}.$$

In all examples of the parallel-series type the total E.M.F. is equal to the E.M.F. per cell multiplied by the number in series, and the total internal resistance is equal to the internal resistance per cell multiplied by the number of cells in series and divided by the number of similar sets or rows in parallel. Had there been six rows in the above example then the E.M.F. would have been 3 volts as before, but the internal resistance would have been reduced to 3^{ω}.

Method in which to Connect Cells in Different Circumstances.* The three methods of connecting cells each have their particular utility, and, although the parallel method is never, and the parallel series method but seldom, used in practical telegraphy, it is nevertheless desirable to state briefly the conditions under which each arrangement should be employed.

The maximum current which can be obtained from any particular cell is reached when the cell is short-circuited and is equal to its E.M.F. d vided by its internal resistance. Similarly, if a thousand cells be placed in series and short-circuited the maximum current will be the same, for whilst the E.M.F. has been increased a thousand-fold the internal resistance has been similarly increased.

If it is required to obtain a larger current from the cells they must be placed in parallel. Every cell which is added increases the current, for, although the E.M.F. remains the same, the internal resistance is reduced by each additional cell. If, now, the current produced by a number of cells joined in series and flowing through a circuit of enormously high resistance is considered,

* This subject is dealt with exhaustively in Dunton's *Treatise on the Grouping of Electric Cells* (Spon).

it will at once be seen that the internal resistance of the cells is insignificant in comparison with the enormous external resistance. Each cell added in series will, therefore, increase the current flowing in the circuit. Upon the other hand, the only effect of joining cells in parallel is to reduce the total internal resistance, and this is of no consequence in comparison with the external resistance. The E.M.F. remains the same, and, consequently, the addition of cells in parallel means no practical increase in the current available. It does, however, mean that each cell supplies only its proportion of the total current.

It will now be clear that in order to obtain the maximum current from the minimum number of cells, the cells should be joined in series when the external resistance is large in comparison with that of the cell, whilst for a low external resistance the cells should be joined in parallel.

Between the extremes already discussed come the cases where parallel series arrangements are necessary. The rule, which may be deduced from Ohm's law, relating to this case is that the arrangement of cells which gives an internal resistance most nearly approximating to the external resistance will furnish the maximum current.*

Example. Suppose that it is desired to know how best to join up forty cells, each having an E.M.F. of 2 volts and an internal resistance of $12{\cdot}5\omega$ to a circuit having a resistance of 20ω.

The forty cells may be joined up in the following ways : (*a*) all in parallel, (*b*) all in series, (*c*) two rows in parallel each of 20 in series, (*d*) four rows in parallel each of 10 in series, (*e*) five rows in parallel each of 8 in series, (*f*) eight rows in parallel each of 5 in series.

* The arrangement which produces the maximum current is that in which the internal resistance is geometrically (*not* arithmetically) nearest to the external resistance. For example, two arrangements having internal resistances of 10ω and 40ω respectively would produce equal currents through an external resistance of 20ω, because $10\omega : 20\omega :: 20\omega : 40\omega$ (with 10ω, the E.M.F. is halved).

With the arrangement (*e*) the internal resistance of the battery is the same as the external resistance, viz. 20^{ω}, and this gives the maximum current, viz. 400 mA. The currents in mA for each of the arrangements are (*a*) 98·5, (*b*) 153·8, (*c*) 275·8, (*d*) 390·2, (*e*) 400, (*f*) 359·6.

From that which has been said it follows that the maximum amount of power obtainable from any battery is greatest when the external resistance is equal to the internal resistance. When this is the case the efficiency is 50 per cent, because there is as much energy lost in overcoming the internal resistance of the battery as is available in the external circuit.

With a given number of cells the maximum current is obtained through a given external resistance when the number of cells in series (n) is equal to the square root of the total number of cells (N) multiplied by the external resistance (R) divided by the internal resistance per cell (r).

$$n = \sqrt{\frac{N \times R}{r}}$$

The result obtained in the previous example may be found by application of this formula, thus—

$$\sqrt{\frac{40 \times 20}{12{\cdot}5}} = \sqrt{64} = 8 \text{ in series.}$$

The number of rows is obtained by dividing the total number of cells by the number per row, i.e. by the number in series.

When a fractional answer is obtained the nearest whole number which will give a whole number when divided into the total number of cells must be chosen.

Example. How should sixty cells, having an E.M.F. of 1·5 volts and an internal resistance of 2^{ω} per cell be arranged so as to provide the maximum possible current through an external resistance of $\cdot 55^{\omega}$?

$$\sqrt{\frac{60 \times {\cdot}55}{2}} = \sqrt{16{\cdot}5} = 4{\cdot}06.$$

The whole numbers which will divide into 60 and give a whole

number as quotient are 1, 2, 3, 4, 5, 6, 10, 12, 15, 20, 30 and 60. 4·06 is nearer to 4 than to any other of these numbers, and the best arrangement is therefore fifteen rows each of four cells in series.

Cells Wrongly Connected and Special Arrangements. In each of the foregoing cases the cells have been correctly joined up. It will now be well to consider one or two simple cases of wrong connection. If, in joining a number of cells in series, some of the cells are reversed, the total E.M.F. will be reduced whilst the total internal resistance will be unaffected. The resultant E.M.F. will be equal to the E.M.F. of the larger number acting in one direction, less the E.M.F. of the smaller number acting in the opposite direction. Where the numbers are equal, the E.M.F.'s will balance and no current will result; that is, of course, supposing that the E.M.F.'s per cell are equal.

EXAMPLE. Ten cells joined in series, E.M.F. 1 volt and internal resistance 5^{ω} per cell, are connected to a resistance of 50^{ω}. What current will be produced if two of the cells are reversed?

E.M.F. of larger number of cells $= 8^{v}$
„ of lesser „ „ $= 2^{v}$
Total E.M.F. of combination $= 6^{v}$

$$\text{Current} = \frac{6^{v}}{50 + 50} = \cdot 06 \text{ ampere.}$$

In certain cases a combination of parallel and series methods of connection might be adopted, as, for instance, where a number of small cells are used in conjunction with a number of cells of larger size.

In the above case the batteries placed in parallel have the same E.M.F. Where this is not the case, the battery of higher E.M.F. drives a current through the battery of lower E.M.F. Such an arrangement is most inefficient and is never intentionally used in practice, although it occasionally occurs by accident.

A simple rule for calculating the current due to such an arrangement is that the two batteries are equivalent, as regards the external circuit, to a new battery whose E.M.F.

equals the E.M.F. of one of them multiplied by the resistance of the other plus the E.M.F. of the latter multiplied by the resistance of the former, the sum being divided by the sum of their internal resistances, whilst the internal resistance of this new battery is equal to the joint resistance of the two batteries.*

Number of Cells Required to Furnish a Given Current. It is frequently necessary to find the number of cells which will be required to furnish a given current through a certain external resistance. If the internal resistance of the cells required is negligible—as in the case of secondary cells—the required number of cells is obtained by ascertaining the voltage necessary and then dividing it by the E.M.F. per cell.

EXAMPLE. How many secondary cells will be required to furnish a current of 20 mA through a circuit of 1536^{ω} ?

Note. E.M.F. per cell should be taken as 2 volts.

$$\text{Current} \times \text{resistance} = \text{E.M.F. required}$$
$$\cdot 02 \times 1536 = 30 \cdot 72 \text{ volts.}$$
$$\frac{\text{Total E.M.F.}}{\text{E.M.F. per cell}} = \text{Number of cells.}$$
$$\frac{30 \cdot 72}{2} = 15 \cdot 36, \text{ i.e. 16 cells.}$$

The answer 15·36 is not practical because a special cell having an E.M.F. of ·36 of the E.M.F. of 2 volts would have to be designed, and therefore the smallest whole number in excess of the result is taken.

* The value of the current C in the external circuit is also given by the following equation—

$$C = \frac{e_1 r_2 + e_2 r_1}{r_1 r_2 + r_1 r_3 + r_2 r_3}$$

where
e_1 = E.M.F. of first cell.
e_2 = ,, second cell.
r_1 = Internal resistance of first cell.
r_2 = ,, ,, second cell.
r_3 = External resistance.

If the two cells are joined up so that the cells combine together in series the numerator of the equation should be altered to $e_1 r_2 - e_2 r_1$. From this, it follows that when no current flows through the external circuit the ratio of the E.M.F.'s of the two cells is equal to the ratio of their internal resistances.

In the case of primary cells the internal resistance cannot usually be ignored and the procedure shown above cannot be followed, because the total resistance of the circuit is not known until the number of cells in circuit is ascertained. The calculation of the current through a circuit connected to a battery consisting of a number of cells in series has been shown on page 46. By the aid of a little elementary algebra the following rule can be readily obtained—*

$$\text{Number of cells} = \frac{\text{External Resistance}}{\dfrac{\text{E.M.F. per cell}}{\text{Current required}} - \text{Internal res. per cell,}}$$

i.e. divide the E.M.F. per cell by the current required (in amperes), and from this deduct the internal resistance per cell. The number of cells required is then equal to the external resistance divided by the result of the first operation.

EXAMPLE. How many cells E.M.F., 1^{v} per cell and internal resistance 10$^{\omega}$ per cell, will be required to provide a current of 15 mA through a resistance of 1200$^{\omega}$?

$$\frac{1200}{\dfrac{1}{\cdot 015} - 10} = 21{\cdot}18 \text{ i.e. 22 cells.}$$

It is inadmissible to use the simplified formula applicable to cases where the internal resistance is negligible, as this would give an incorrect answer of 18 cells. The same remarks apply to the fractional result as before, save that in this case the internal resistance of the special cell would also have to be proportionally less. The current produced by 22 cells will be slightly in

* $\dfrac{ne}{nr + R} = C \therefore n = \dfrac{R}{\dfrac{e}{C} - r}$ where n = number of cells in series, r = internal res. per cell, R = external res., and C = current in amperes.

excess of 15mA, whilst that supplied by 21 cells would be very slightly less than the specified value.

A minimum value for the E.M.F. and a maximum value for the internal resistance of each type of cell was given in Chapter I. A cell having these values is not considered to be faulty, and, although the average values given by an efficiently maintained battery would be far better than these, it is clearly necessary to recognize that the worst values may obtain. In order that the specified current shall always be produced upon a telegraph circuit, the minimum value of the E.M.F. per cell and the maximum value of the internal resistance per cell are always taken in working out the battery power.

EXAMPLE. What power will be required to work a double current set through a 100 miles of 100 lb. copper line?

Resistance of wire	=	878^{ω}
,, ,, the two earths	=	20^{ω}
,, ,, two galvanometers	=	60^{ω}
,, ,, one relay	=	200^{ω}
Total external resistance	=	1158^{ω}

Leclanché No. 1 cells, E.M.F. 1^{V} internal resistance 2^{ω} per cell are employed. 14 mA required.

$$\text{Number of cells required} = \frac{1158}{\frac{1}{\cdot 014} - 2} = 16{\cdot}7$$

or 17 cel's.

Special Cases. The internal resistance of the battery employed upon telegraph circuits is nearly always much less than that of the external circuit, and, therefore, the cells are generally arranged in simple series. In such cases the formula just given is always applicable, and the result obtained may be accepted without question. Where, however, the internal resistance

approaches or approximates to that of the external circuit a certain amount of caution is necessary. This condition is fortunately indicated by the formula. If the E.M.F. per cell divided by the current is not at least twice the value of the internal resistance per cell, then a multiple-series arrangement is necessary. If the internal resistance is greater than the first-named quantity, the current cannot be provided by cells in simple series. The maximum current is obtained from a cell when it is short-circuited, and this current is the same as that obtained from, say, a thousand cells placed in series and short-circuited.

The internal resistance of a number of cells in multiple arc is—

$$\frac{\text{Internal resistance per cell}}{\text{Number of rows}} \times \text{Number in series.}$$

This is identically the same as the statement on page 45.)

A battery consisting of two rows of cells in parallel is equivalent to one battery (in simple series), having the same number of cells as one row of the former, but having an internal resistance equal to half that of the former per cell.

This forms the key to the solution of such a problem as the following—

EXAMPLE. How many cells each having an E.M.F. of two volts and an internal resistance of 10ω per cell will be required to furnish a current of 400 mA through an external resistance of 18ω ?

Simple series—

$$\frac{18}{\frac{2}{\cdot 4} - 10} = \frac{18}{5 - 10}$$

Denominator negative, therefore simple series will not meet the case.

Two rows—

$$\frac{18}{5-5} = \text{Infinity.}$$

Three rows—

$$\frac{18}{5-3\frac{1}{3}} = 10{\cdot}8, \text{ i.e. } 11 \text{ cells.}$$

Note. E.M.F. ÷ current is *less* than twice the internal resistance.

Four rows—

$$\frac{18}{5-2\frac{1}{2}} = 7{\cdot}2, \text{ i.e. } 8 \text{ cells.}$$

Five rows—

$$\frac{18}{5-2} = 6 \text{ cells.}$$

Six rows—

$$\frac{18}{5-1\frac{2}{3}} = 5{\cdot}4, \text{ i.e. } 6 \text{ cells.}$$

The total number of cells required is as follows—

Three rows . .	33
Four rows . .	32
Five rows . .	30
Six rows . .	36

The arrangement with five rows gives the smallest number of cells, and is therefore to be preferred. Where two different arrangements give the same result it is well to remember that the resistance of a primary battery will rise towards the end of its discharge, and therefore the arrangement with the lower value of internal resistance should be chosen. It may also be noted that the larger the number of rows the smaller is the current provided by each cell.

PART II.—JOINT RESISTANCE AND DIVISION OF CURRENT

The total resistance offered by circuits or conductors placed in series is equal to the sum of their separate resistances. For instance, the total resistance of the conductors depicted in Fig. 16 is 1623^{ω}.

Before dealing with resistances in parallel it is necessary to define some of the important terms which are commonly employed.

Conductance has exactly the opposite meaning to resistance, and may be defined as the inverse of resistance. From this definition it follows that

$$\text{Conductance} = \frac{1}{\text{Resistance}}$$

$$\text{and Resistance} = \frac{1}{\text{Conductance.}}$$

The unit of resistance is the "ohm," and that of conductance is the "mho," which is "ohm" written backwards. A circuit having a resistance of one ohm

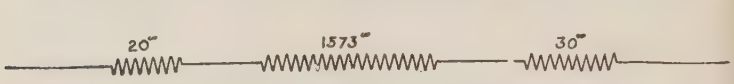

Fig 16. Resistances in Series

has a conductance of one mho, so that the two units themselves have the same numerical value in this case. A circuit having a resistance of 10ω has a conductance of $\frac{1}{10}$ mho, whilst a circuit having a resistance of $\frac{1}{10}\omega$ would have a conductance of 10 mhos.

This definition of conductance is extremely useful in making clear the methods of finding the resistance of a number of paths in parallel and the proportion in which a given value of current will divide amongst them.

It has been found that *the total conductance of a number of paths in parallel is equal to the sum of their separate conductances.* The joint resistance or total resistance offered by the combination of paths is, therefore, the reciprocal of their total conductance, which latter is obtained by adding together the conductance of each path.

Example. What is the joint resistance of four paths having resistances of respectively 2ω, 3ω, 4ω, and 5ω placed in parallel ?

Total conductance = sum of separate conductances
" " $= \frac{1}{2} + \frac{1}{3} + \frac{1}{4} + \frac{1}{5}$ mho.

$$\text{Resistance} = \frac{1}{\text{Conductance}}$$

$$\text{Joint resistance} = \frac{1}{\text{Total conductance}} = \frac{1}{\frac{1}{2} + \frac{1}{3} + \frac{1}{4} + \frac{1}{5}} \text{ ohm.}$$

$$= \frac{1}{\frac{77}{60}} = \frac{60}{77} \text{ ohm.}$$

In the case of a number of paths of equal resistance placed in parallel inspection of the previous example will at once reveal the fact that their joint resistance is equal to the resistance of one of them divided by the number of paths in parallel. For instance the joint resistance of ten 1000^{ω} paths placed in parallel is

$$\frac{1000}{10} = 100^{\omega}.$$

Another very useful rule may, with the aid of a little simple algebra, be deduced from the rule on p. 54. It is that *the resistance of two paths in parallel is equal to their product divided by their sum.* An example of its application is given below—

What is the joint resistance of a 50^{ω} path in parallel with a 150^{ω} path ?

$$\text{Joint resistance} = \frac{\text{Product}}{\text{Sum}} = \frac{50 \times 150}{50 + 150} = \frac{7500}{200} = 37{\cdot}5^{\omega}$$

A formula may be deduced for three, four, five, or any number of paths.*

A problem which occasionally crops up in practice is that in which the joint resistance and the resistance of one of the two paths in parallel only are known.

* The joint resistance of n paths a^{ω}, b^{ω}, c^{ω}, d^{ω} . . in parallel

$$= \frac{a \times b \times c \times d \quad . \quad . \quad . \quad . \quad . \quad (n-1) \times n}{\frac{S}{a} + \frac{S}{b} + \frac{S}{c} + \frac{S}{d} \quad . \quad . \quad . \quad . \quad . \quad \frac{S}{n-1} \times \frac{S}{n}}$$

where S is the product of the resistances of the n paths and forms the numerator of the formula.

From this information the resistance of the other path may readily be obtained.

It has already been stated that the total conductance is equal to the sum of the separate conductances. In the case of two circuits in parallel the total conductance is equal to the conductance of the two added together. Hence, the conductance of one of the circuits is clearly equal to the total conductance, less the conductance of the other circuit.

An example is appended—

The joint resistance of two paths in parallel is 20^{ω}, and the resistance of one of them is known to be 30^{ω}. Find the resistance of the other path.

Conductance of first circuit = total conductance − conductance of second circuit.

$$\text{Conductance of first circuit} = \frac{1}{20} - \frac{1}{30} \text{ mho.}$$

$$\therefore \text{ Resistance of first circuit} = \frac{1}{\frac{1}{20} - \frac{1}{30}} \text{ ohms.}$$

$$= 60^{\omega}.$$

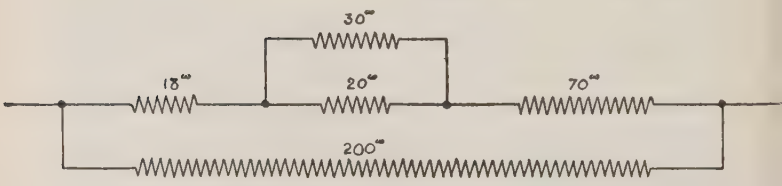

Fig. 17. Resistances Combined in Series and Parallel

An example of a somewhat complicated circuit is shown in Fig. 17. The total resistance of the arrangement is equal to the joint resistance of 200^{ω} and the resistance of the remainder of the circuit. The example would be worked as follows—

$$\text{Joint resistance of } 20^{\omega} \text{ and } 30^{\omega} \text{ paths} = \frac{20 \times 30}{20 + 30} = 12^{\omega}$$

Total resistance of upper path $= 18 + 12 + 70 = 100\omega$

$$\text{Resistance of whole combination} = \frac{100 \times 200}{100 + 200}$$
$$= 66\tfrac{2}{3}\omega.$$

From the extensions of Ohm's law known as Kirchhoff's laws* it can readily be shown that *a current divides between a number of paths in parallel in direct proportion to their respective conductances.* An example of the application of this rule is given below—

A current of 10 amperes divides between four paths in parallel whose resistances are respectively 3ω, 4ω, 5ω, and 6ω. What is the value of the current in each path ?

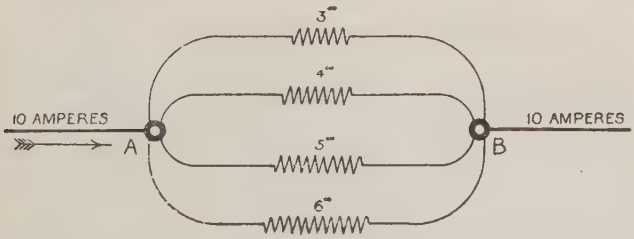

FIG. 18. DIVISION OF CURRENT BETWEEN PATHS IN PARALLEL

The conditions of the problem are shown in Fig. 18.

Resistances of paths	3ω 4ω 5ω 6ω
Conductances of paths	$\frac{1}{3}$ $\frac{1}{4}$ $\frac{1}{5}$ $\frac{1}{6}$
The 10 amperes divide as	$\frac{1}{3} : \frac{1}{4} : \frac{1}{5} : \frac{1}{6}$
Bringing to common denominator	$\frac{20}{60} : \frac{15}{60} : \frac{12}{60} : \frac{10}{60}$
The 10 amperes divide as	20 : 15 : 12 : 10

$\therefore$ if the total current splits into $20 + 15 + 12 + 10 = 57$ parts,

the current through each path is respectively $\frac{20}{57}$, $\frac{15}{57}$, $\frac{12}{57}$, $\frac{10}{57}$, of 10 amperes.

i.e. $3\frac{29}{57}$, $2\frac{36}{57}$, $2\frac{6}{57}$, $1\frac{43}{57}$ amperes.

Obviously if this result is correct the sum of the currents should be 10 amperes, and by trial it will be found to be so. The current in the 6ω path should be half that in the 3ω path.

* "The Calculation of Current Values in Networks," by J. Lockhart, I.P.O.E.E., Paper No. 14, December, 1907.

These points enable one rapidly to test the accuracy of the arithmetic involved.

A useful rule, the accuracy of which may readily be checked by the above methods, is that by which the current through two paths A and B in parallel may be at once written down without calculation. The current through A is $\frac{B}{A+B}$ of the total current, and that through B is $\frac{A}{A+B}$ of the total current, e.g.

A current of 10 amperes divides between two paths of 2ω and 3ω placed in parallel. What is the current in each ?

In the 2ω path $\frac{3}{2+3}$ of 10 amps. = 6 amperes.

In the 3ω path $\frac{2}{2+3}$ of 10 amps. = 4 amperes.

It is sometimes necessary to deduce the resistance of a path of unknown resistance, placed in parallel with another of known resistance, from a knowledge of the proportion in which a current divides between them. It has been previously pointed out that the current splits in direct proportion to the conductances of the paths. The converse of this is obviously true, viz. that the conductances of paths in parallel are proportional to the currents in each. An example is given below—

The currents in two paths in parallel are respectively 10 amperes and 8 amperes. If the resistance of the higher path is 40ω, what is the resistance of the other ?

Currents in the paths respectively 10 and 8 amperes.

$\therefore$ Conductances of the paths 10 : 8.

The conductance of the better path $= \frac{10}{8}$ of the other.

Conductance of other path $= \frac{1}{40}$

$\therefore$ Conductance of better path $= \frac{10}{8}$ of $\frac{1}{40}$

$= \frac{1}{32}$ mho.

Resistance of better path $= 32\omega$.

Another method of working this problem is given in order clearly to demonstrate a useful fact in connection with circuits in parallel. Referring again to Fig. 18 ; the difference of potential between A and B can have but one value, since were this not the case either the point A or the point B would have two different potentials at one time. This is clearly impossible, hence the current in each path multiplied by its resistance gives the difference of potential between its ends, and this is the same for all the paths. Practically, this statement means that Ohm's law may be applied to a part of a circuit. Had there been batteries inserted in the paths the question would have been a little more complicated.

The working of the previous example by means of the facts stated above is appended.

Resistance of highest path 40^{ω}
Current in ,, ,, 8 amperes.

Difference of potential between its ends $40 \times 8 = 320$ volts.

$R = \frac{E}{C}$ $\therefore$ Resistance of other path $\frac{320}{10} = 32^{\omega}$.

The current sent through any circuit by a battery is equal to its E.M.F. divided by the total resistance of the circuit. This total resistance is made up of the internal resistance of the battery and the external resistance. For instance, a battery having an E.M.F. of 20^{v} and an internal resistance of 100^{ω} applied to a circuit of 400^{ω} will produce a current of $\frac{20}{100 + 400}$ or 40 mA.

Where two or more paths are joined in parallel to a battery the external resistance is equal to their joint resistance, as in the following example—

EXAMPLE. What current will be produced in each of four circuits of respectively 20^{ω}, 30^{ω}, 100^{ω} and 150^{ω} resistance joined in parallel, when connected to a battery of three sets joined in parallel, each set consisting of 5 cells in series ?
E.M.F. per cell one volt. Internal resistance 6^{ω} per cell.

94304

E.M.F. of battery $= 1^{v} \times 5 = 5$ volts.

Internal resistance $= \dfrac{6 \times 5}{3} = 10\omega$

Resistances of paths	20ω	30ω	100ω	150ω
Conductances of paths	$\frac{1}{20}$	$\frac{1}{30}$	$\frac{1}{100}$	$\frac{1}{150}$

Bringing to common denominator $\dfrac{15}{300}\ \dfrac{10}{300}\ \dfrac{3}{300}\ \dfrac{2}{300}$

Total conductance $= \dfrac{15 + 10 + 3 + 2}{300} = \dfrac{30}{300}$

Joint resistance $= \dfrac{300}{30} = 10\omega$

Total current $= \dfrac{5}{10 + 10} = \dfrac{5}{20} = 250$ mA.

The current splits as 15 : 10 : 3 : 2

$\therefore$ if 250 mA splits into $15 + 10 + 3 + 2 = 30$ parts, the current through each path is respectively $\dfrac{15}{30}, \dfrac{10}{30}, \dfrac{3}{30}, \dfrac{2}{30}$, of 250 mA.

i.e. 125 mA, 83·3 mA, 25 mA, 16·7 mA.

Whilst dealing with batteries and circuits it will perhaps be well to deduce the relations which exist between the E.M.F. of a battery and the difference of potential between its terminals when connected to a completed circuit. This may best be done by considering a definite case. A battery having an E.M.F. of 2 volts and an internal resistance of 12ω is connected to a circuit having a resistance of 8ω (Fig. 19). The current through the circuit is $\dfrac{2}{12 + 8} = \cdot 1$ amp. The difference of potential between the ends of the external resistance is, by Ohm's law, $\cdot 1 \times 8\omega = \cdot 8$ volt. This is a difference of potential observable at the terminals of the cell when the circuit is closed. The difference between this value and that of the E.M.F. of the battery on open circuit is the E.M.F. which is lost in traversing the resistance of the battery. The current inside the battery is obviously the same as that in the

external circuit, viz. ·1 amp. Hence the value of the E.M.F. taken up in the battery itself is $\cdot 1 \times 12^{\omega} = 1 \cdot 2$ volts, which is the value deduced from the difference between the E.M.F. on open and closed circuit. In any case of this character the whole of the E.M.F. of the cell must be accounted for.

From a knowledge of the E.M.F. of a battery upon open circuit and the difference of potential across its

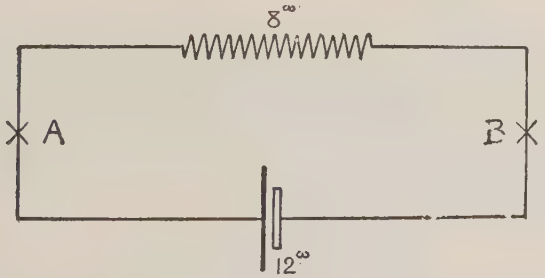

Fig. 19. If the E.M.F. of the Cell is 2v the Difference of Potential Between *A* and *B* is ·8v

terminal when connected by a known resistance, the value of its internal resistance can readily be calculated. This is the principle employed in one method of measuring internal resistance. A numerical example is appended—

Example. The E.M.F. of a battery upon open circuit is 30 volts, but when the circuit is closed through an external resistance of 70^{ω} the difference of potential falls to 23 volts. What is its internal resistance ?

Method 1.

E.M.F. of battery $= 30^{v}$
P.D. across 70^{ω} $= 23^{v}$
E.M.F. lost in battery itself $= 30 - 23 = 7^{v}$
Current in battery and in 70^{ω} circuit is the same.
$\therefore$ By Ohm's law 23 : 7 : : 70 : Internal resistance.

$$\text{Internal resistance} = \frac{7}{23} \times 70$$
$$= 21 \cdot 3^{\omega} \text{ approx.}$$

Method 2.

E.M.F. of battery $= 30^{v}$
P.D. across 70^{ω} $= 23^{v}$
E.M.F. lost in battery itself $= 30 - 23 = 7^{v}$

$$\text{Current through } 70^{\omega} = \frac{\text{PD}}{70} = \frac{23}{70} \text{ ampere}$$

$$\text{Internal resistance of battery} = \frac{\text{E.M.F. lost}}{\text{Current}} = \frac{7}{\frac{23}{70}}$$

$$= 21{\cdot}3^{\omega} \text{ approx.}$$

PART III.—THE RESISTANCE OF WIRES OF VARYING DIMENSIONS

It has been found by experiment that the resistance which any conductor offers to an electric current depends upon three factors, viz.—

1. Its dimensions.
2. Its composition.
3. Its temperature.

If the resistance of any material of known dimensions has a certain value at a particular temperature, then it is a matter of ease to deduce the value of the resistance which will be offered by that material when given different dimensions at the same temperature. The changes produced by altering the temperature have been carefully determined for all the substances in common use for electrical purposes. It will, therefore, be seen that if the resistance of any substance of known dimensions is stated for any given temperature the determination of its resistance when made into any particular form is merely a matter of arithmetic.

Experiment proves that *the resistance of a conductor of uniform gauge is directly proportional to its length and inversely proportional to its sectional area.* It is, of course, assumed that the temperature and composition do not vary. This condition will apply to all the problems given unless otherwise specified.

In order to shorten and simplify the various proportions stated the following letters will be employed to denote the values of the resistances and dimensions stated opposite them—

l_1	to represent	the	length	of the	first wire.
l_2	,,	,,	,,	,,	second wire.
a_1	,,	,,	sectional area	of the	first wire.
a_2	,,	,,	,,	,,	second wire.
d_1	,,	,,	diameter	,,	first wire.
d_2	,,	,,	,,	,,	second wire.
w_1	,,	,,	total weight	,,	first wire.
w_2	,,	,,	,,	,,	second wire.
R_1	,,	,,	resistance	,,	first wire.
R_2	,,	,,	,,	,,	second wire.

EXAMPLE 1. If the resistance of 10 miles of wire is 89ω, what is the resistance of 7 miles of similar wire ?

$$\begin{array}{lccccccc} & l_1 & : & l_2 & :: & R_1 & : & R_2 \\ \text{i.e.} & 10 & : & 7 & :: & 89 & : & R_2 \end{array}$$

$$\therefore R_2 = \frac{7 \times 89}{10} = 62{\cdot}3\omega.$$

EXAMPLE 2. Two wires of similar gauge and material offer resistances of 40ω and 28ω respectively. If the first is 360 yards long, what is the length of the second wire ?

$$\begin{array}{lccccccc} & R_1 & : & R_2 & :: & l_1 & : & l_2 \\ \text{i.e.} & 40 & : & 28 & :: & 360 & : & l_2 \end{array}$$

$$\therefore l_2 = \frac{28 \times 360}{40} = 252 \text{ yards.}$$

EXAMPLE 3. Two wires of equal length have sectional areas of ·12 square inch and ·15 square inch respectively. If the resistance of the smaller wire is 10ω, what is the resistance of the larger ?

$$\begin{array}{lccccccc} & a_2 & : & a_1 & :: & R_1 & : & R_2 \\ \text{i.e.} & {\cdot}15 & : & {\cdot}12 & :: & 10 & : & R_2 \end{array}$$

$$\therefore R_2 = \frac{{\cdot}12 \times 10}{{\cdot}15} = 8\omega.$$

Given both resistances and the area of one wire the area of the second would be found in similar fashion.

EXAMPLE 4. A wire 12 miles long, having a sectional area of ·021 square inch, has a resistance of 7·5 ohms. What will

be the resistance of a similar wire 18 miles long having a sectional area of ·023 square inch ?

$$l_1 : l_2 :: R_1 : R_2$$

also

$$a_2 : a_1 :: R_1 : R_2$$

$$\therefore \quad l_1 \times a_2 : l_2 \times a_1 :: R_1 : R_2$$

$$\text{i.e.} \quad 12 \times \cdot 023 : 18 \times \cdot 021 :: 7\cdot 5 : R_2$$

$$\therefore R_2 = \frac{18 \times \cdot 021 \times 7\cdot 5}{12 \times \cdot 023} = 10\cdot 27^{\omega}.$$

The cross-sectional area of a round wire is equal to the square of its diameter multiplied by ·7854, hence it will be obvious that *the resistance of a conductor of uniform gauge is proportional to its length and inversely proportional to the square of its diameter.*

Examples of the application of this rule are appended.

EXAMPLE 5. What will be the resistance of a wire 26 yards long having a diameter of 33 mils if the resistance of a wire of the same material 52 miles long with a diameter of ·01 inch has a resistance of 32^{ω} ?

Note. In comparing either two lengths or two diameters the units of each dimension chosen should be the same, but it is not necessary that all four quantities should be in the same unit. A mil is one-thousandth of one inch.

$$\cdot 01 \text{ inch} = 10 \text{ mils}$$

$$l_2 : l_1 :: R_2 : R_1$$

and

$$(d_1)^2 : (d_2)^2 :: R_2 : R_1$$

$$\therefore l_2 \times (d_1)^2 : l_1 \times (d_2)^2 :: R_2 : R_1$$

$$(52 \times 1760) \times 33^2 : 26 \times 10^2 :: 32 : R_1$$

$$\therefore R_1 = \frac{26 \times 10^2 \times 32}{52 \times 1760 \times 33^2}$$

$$= \cdot 0008348^{\omega} \text{ or } 834\cdot 8 \text{ microhms.}$$

In problems where the lengths of the two wires are equal the proportion reduces to—

$$(d_2)^2 : (d_1)^2 :: R_1 : R_2.$$

EXAMPLE 6. A wire 30 miles long 40 mils. in diameter, has a resistance of 1000^{ω}. What is the length of a wire of the same

material having a resistance of 200ω and a diameter of 25 mils ?

$$\begin{array}{rccccccc} & R_1 & : & R_2 & :: & l_1 \times (d_2)^2 & : & l_2 \times (d_1)^2 \\ \text{i.e.} & 1000 & : & 200 & :: & 30 \times 25^2 & : & l_2 \times 40^2 \end{array}$$

$$\therefore l_2 \times 40^2 = \frac{200 \times 30 \times 25^2}{1000}$$

$$l_2 = \frac{200 \times 30 \times 25^2}{1000 \times 40^2}$$

$$= 2{\cdot}344 \text{ miles approx.}$$

EXAMPLE 7. The resistance of an iron wire 20 miles long, having a diameter of 171 mils, is $266{\cdot}4\omega$. What is the diameter of a wire 3 miles long having a resistance of $79{\cdot}92\omega$?

$$\begin{array}{rccccccc} & R_2 & : & R_1 & :: & l_2 \times (d_1)^2 & : & l_1 \times (d_2)^2 \\ \text{i.e.} & 79{\cdot}92 & : & 266{\cdot}4 & :: & 3 \times 171^2 & : & 20 \times (d_2)^2 \end{array}$$

$$\therefore 20 \times (d_2)^2 = \frac{266{\cdot}4 \times 3 \times 171^2}{79{\cdot}92}$$

$$(d_2)^2 = \frac{266{\cdot}4 \times 3 \times 171^2}{79{\cdot}92 \times 20}$$

$$\therefore \quad d_2 = \sqrt{14{,}620} = 121 \text{ mils approx.}$$

EXAMPLE 8. What is the diameter of a wire 7 miles long having the same resistance as a wire 20 miles long the diameter of which is 60 mils ?

$$\begin{array}{rccccccc} & l_1 & : & l_2 & :: & R_1 & : & R_2 \\ \text{and} & (d_2)^2 & : & (d_1)^2 & :: & R_1 & : & R_2 \\ \therefore l_1 \times (d_2)^2 & : & l_2 \times (d_1)^2 & :: & R_1 & : & R_2 \end{array}$$

Since $R_1 = R_2$

then $l_1 \times (d_2)^2 = l_2 \times (d_1)^2$

i.e. $7 \times 60^2 = 20 \times (d_1)^2$

$$\therefore (d_1)^2 = \frac{7 \times 60^2}{20}$$

and $$d_1 = \sqrt{\frac{7 \times 60^2}{20}} = 35{\cdot}5 \text{ mils approx.}$$

Where the diameter of one wire and the sectional area of another are given it is obviously necessary to reduce both to the same dimension. It has been previously stated that the area of a circle is equal to ·7854

times the square of its diameter. An example in which these complications arise is given below—

EXAMPLE 9. A wire 17 miles long, diameter 171 mils, has a resistance of 230ω. What is the resistance of a similar wire 152 yards long having a sectional area of ·02 square inch.

Note. As in the previous problem both lengths must be expressed in terms of the same unit. A similar remark also applies to the diameters.

Preliminary Calculations.

The area of a circle $= \frac{\pi}{4} \times (\text{diameter})^2$.

$$\pi = 3{\cdot}1416 \therefore \frac{\pi}{4} = {\cdot}7854.$$

Diameter of wire = 171 mils = ·171 inch.

Area of wire ·171 inch in diameter = $\cdot7854 \times \cdot171^2 = \cdot023$ square inch.

As in example 4.

$$l_1 \times a_2 \ : \ l_2 \times a_1 \ :: \ R_1 \ : \ R_2$$

i.e. $17 \times 1760 \times \cdot02 \ : \ 152 \times \cdot023 \ :: \ 230 \ : \ R_2$

$$\therefore R_2 = \frac{152 \times \cdot023 \times 230}{17 \times 1760 \times \cdot02} = 1{\cdot}34\omega.$$

The rules given for the comparison of the resistances of wires of differing dimensions are merely deductions from the experimentally determined equation—

$$R = \frac{l \times S}{a}$$

where l = length of conductor (inches or cms.).
a = sectional area of conductor (sq. in. or sq. cm.).
S = specific resistance or resistivity, as it is now termed (cubic inches or c. cms.).
R = resistance of conductor in ohms.

If l and a are made unity then R is equal to S, hence the resistivity of any substance is the resistance between the opposite faces of a unit cube of that material. Since both inches and centimetres are in daily use as units, it is necessary to specify the unit employed.

The resistivity of a substance is, therefore, defined as so many microhms per cubic inch or per cubic centimetre, according to the unit chosen. It is scarcely necessary to remark that l, a, and S must all be in either centimetres or inches and not a compound of both.

The resistivities of a few materials, taken from the observations of Dewar and Fleming, are given below—

Material	Resistivity at 0° C	
	Microhms per cubic inch	Microhms per cubic centimetre
Silver (electrolytic)	·57795	1·468
Copper* (electrolytic)	·61457	1·561
Gold	·86496	2·197
Aluminium	1·049	2·665
Zinc	2·2642	5·751
Nickel (electrolytic)	2·7303	6·935
Iron	3·5689	9·065
Tin (pressed)	5·137	13·048
Lead (pressed)	8·0236	20·38
Mercury	37·04	94·07
German silver	8 to 12	20 to 30
Graphite	118 to 157	300 to 400
Saturated solution of sulphate of copper	$11{\cdot}535 \times 10^6$	$29{\cdot}3 \times 10^6$
Saturated solution of sulphate of zinc	$13{\cdot}268 \times 10^6$	$33{\cdot}7 \times 10^6$

* Modern tables of copper resistance are based on the following values—

Res. of metre-gramme of hard copper at 60° F. $= \cdot1539^{\omega}$
„ „ „ „ soft „ „ $= \cdot1508^{\omega}$

1 cubic foot of copper weighs 555 lb. or 8·89 grammes per cubic centimetre at 60° F. Specific gravity 8·90.

The resistance of soft copper is ·66783 microhm per cubic inch, and 1·6963 microhm per cubic centimetre, whilst the corresponding values for hard copper are respectively ·68154 and 1·73116 microhms.

The resistivity of pure iron is 10·616 microhms per cubic centimetre. One mile of pure iron wire having a resistance of one ohm weighs 4656 lb., whilst an ohm-mile of commercial wire should not weigh more than 5328 lb. (See page 70.)

Example 10. What is the resistance of 1 mile of copper wire 112 mils in diameter, given the resistivity as ·681327 microhms per cubic inch ?

$$R = \frac{(1760 \times 36) \times \cdot 681327}{\cdot 7854 \times (\cdot 112)^2} \text{ microhms}$$
$$= 4{,}382{,}000 \text{ microhms approx.}$$
$$= 4 \cdot 382\omega.$$

It may also be well to note that the statement upon page 66 may be written in the following form—

$$\text{Specific resistance (per cub. inch or per cub. cm.)} = \frac{\text{Res. in ohms} \times \text{area (inches or cms.)}}{\text{Length (inches or cms.)}}$$

All quantities must be in *inches* or *all* in *centimetres*.

An example of the application of these facts is appended.

Example 11. Compare the specific resistances of iron and copper, given that 1 mile of iron wire 171 mils in diameter has a resistance of 13·32 ohms, whilst a mile of copper wire having a diameter of 97 mils has a resistance of 5·855 ohms.

$$\text{Specific res. of iron per cub. in.} = \frac{13 \cdot 32 \times (\cdot 171^2 \times \cdot 7854)}{1760 \times 36}$$
$$= 4 \cdot 829 \text{ microhms approx.}$$
$$\text{Specific res. of copper per cub. in} = \frac{5 \cdot 855 \times (\cdot 097^2) \times \cdot 7854)}{1760 \times 36}$$
$$= \cdot 6829 \text{ microhms approx.}$$

Answer. 4·828 : ·6829
or 7·07 : 1.

This may also be expressed by the statement that the iron has a conductivity equal to 14·14 per cent of that of the copper.

There is still another way in which the gauge of a wire may be specified, and this is by stating its weight per unit length. This method is adopted by the Post Office, and it will, therefore, be necessary to consider the relations between the length, weight, and resistance of a wire.

The weight of a wire of uniform section is directly proportional to its cubic contents, i.e. to its length multiplied by its sectional area. It has already been

stated that the resistance of a wire is directly proportional to its length divided by the square of its diameter. If both the numerator and denominator of a fraction are multiplied by the same quantity the value of the fraction is unaltered, therefore the relation may be re-stated thus : The resistance of a wire varies directly as the square of its length, and inversely as the product of its length and its diameter squared. The latter quantity is directly proportional to its weight, hence the rule becomes : *The resistance of a conductor of uniform gauge is directly proportional to the square of its length and inversely to its total weight.*

If two wires of the same total weight are respectively one and two yards long, then their resistances will be as one is to four. Not only is the length of wire greater in the second case, but its gauge is less since it is obvious that the same quantity of metal is spread over two yards instead of one.

An example of the application of the above rule is appended.

EXAMPLE 12. A wire 80 yards long weighing 30 lb. has a resistance of 2ω. What will be the resistance of a similar wire 60 yards long weighing only 12 lb. ?

$$(l_1)^2 : (l_2)^2 :: R_1 : R_2$$

and

$$w_2 : w_1 :: R_1 : R_2$$

$$\therefore (l_1)^2 \times w_2 : (l_2)^2 \times w_1 :: R_1 : R_2$$

$$\text{i.e. } 80^2 \times 12 : 60^2 \times 30 :: 2 : R_2$$

$$\therefore R_2 = \frac{60^2 \times 30 \times 2}{80^2 \times 12} = 2{\cdot}8125\omega.$$

When applying these rules, care must be taken to express the weights of both wires as *total* weights. As will be shown later, the *weight per mile* specifies the gauge of the conductor, and its resistance is, therefore, proportional to the simple length.

EXAMPLE 13. A wire 1500 yards long weighing 300 lb. per mile has a resistance of 3ω. What resistance will be offered by a wire of similar material 80 yards long having a total weight of 1 cwt. ?

Total weight of 1500 yards of wire weighing 300 lb. per mile $= \frac{1500 \times 300}{1760}$.

$$(l_1)^2 : (l_2)^2 :: R_1 : R_2$$

and $$w_2 : w_1 :: R_1 : R_2$$

$$\therefore (l_1)^2 \times w_2 : (l_2)^2 \times w_1 :: R_1 : R_2$$

$$1500^2 \times 112 : 80^2 \times \frac{1500 \times 300}{1760} :: 3 : R_2$$

$$\therefore R_2 = \frac{80^2 \times \frac{1500 \times 300}{1760} \times 3}{1500^2 \times 112} = \frac{3}{154} = \cdot 01948\omega.$$

The weight of a wire of given length and material is proportional to its sectional area. It will, therefore, be evident that the rule given upon page 69 may also be written "*the resistance of a conductor of uniform gauge varies directly as its length and inversely as its weight per mile.*" The application of the rule is so obvious in view of examples 1 to 4 that no illustrations should be necessary.

In practice the various sizes of wire are named by their weights per mile. For instance, an iron wire weighing 400 lb. per mile is termed a "400-lb. iron wire." As the resistance per mile of any particular kind of wire is inversely proportional to its weight per mile it will, therefore, be seen that the two quantities when multiplied together will always give the same result. Hence, by remembering this number for iron and for copper, the resistance of all the various sizes of wire used by the Department may be memorized. The number is 5328 for iron and 878·73 for copper wire.

The resistance per mile of a 400-lb. iron wire is therefore $\frac{5328}{400} = 13{\cdot}32\omega$, a 200-lb. iron wire similarly is $\frac{5328}{200} = 26{\cdot}64\omega$, i.e. twice the resistance of the former.

The resistance of a 100-lb. copper wire is $\frac{878{\cdot}73}{100} = 8{\cdot}7873\omega$ per mile, and of a 150-lb. wire $\frac{878{\cdot}73}{150} = 5{\cdot}8582\omega$ per mile.

The copper wire of commerce is not chemically pure, and the presence of impurities increases its resistance.

Instead of defining the specific resistance per cubic inch, a conductivity of 99 per cent of that of pure copper is often specified.

From either the specific resistance per cubic centimetre or per cubic inch the resistance of any wire of any given material may be calculated. In the same way, from the resistance of a foot of wire weighing one grain similar information may be deduced. This latter value is perhaps more useful in the case of conductors whose gauges are specified by their weights per mile.

The resistance of a foot-grain of pure hard-drawn copper wire is $\cdot 22064^{\omega}$, and of pure iron $1 \cdot 169^{\omega}$ at 60° F.

The corresponding resistivity formula is—

$$R = \frac{l^2 \times W}{w}$$

where l = length in feet.

W = resistance of one foot of wire weighing one grain (7000 grains = 1 lb.)

w = total weight in grains.

Example 14. Find the resistance of a copper wire 1 mile long weighing 100 lb.

$$R = \frac{(1760 \times 3)^2 \times \cdot 22064}{100 \times 7000}$$
$$= 8 \cdot 7873 \text{ ohms.}$$

There is one other class of problem which is occasionally met with. In this the weight and diameter of a wire are specified. The relation is that *the resistance varies directly as the total weight, and inversely as the fourth power of the diameter.**

* w is proportional to $l \times a$

$\therefore$ l is proportional to $\frac{w}{a}$

Now R is proportional to $\frac{l}{a}$

Substituting for l,

$$R \text{ is proportional to } \frac{\frac{w}{a}}{a} = \frac{w}{a^2}.$$

The sectional area is proportional to d^2,

$$\therefore R \text{ is proportional to } \frac{w}{d^4}.$$

EXAMPLE 15. Two wires weighing 80 lb. and 60 lb. have diameters respectively 100 and 40 mils. If the resistance of the thicker wire is 10^{ω}, what is the resistance of the other ?

$$w_1 : w_2 :: R_1 : R_2$$
$$(d_2)^4 : (d_1)^4 :: R_1 : R_2$$
$$\therefore w_1 \times (d_2)^4 : w_2 \times (d_1)^4 :: R_1 : R_2$$
i.e. $$80 \times 40^4 : 60 \times 100^4 :: 10 : R_2$$

$$\therefore R_2 = \frac{60 \times 100^4 \times 10}{80 \times 40^4} = 293^{\omega} \text{ approx.}$$

EXAMPLE 16. Two wires having resistances of 256^{ω} and 81^{ω} weigh respectively 10 lb. and 25 lb. If the diameter of the first wire is 30 mils, what is the diameter of the second ?

$$R_2 : R_1 :: w_2 : w_1$$
$$R_2 : R_1 :: (d_1)^4 : (d_2)^4$$
$$\therefore R_2 : R_1 :: w_2 \times (d_1)^4 : w_1 \times (d_2)^4$$
$$81 : 256 :: 25 \times 30^4 : 10 \times (d_2)^4$$

$$10 \times (d_2)^4 = \frac{256 \times 25 \times 30^4}{81}$$

$$(d_2)^4 = \frac{256 \times 25 \times 30^4}{81 \times 10}$$

$$d = \sqrt[4]{\frac{256 \times 25 \times 30^4}{81 \times 10}}$$
$$= 50{\cdot}3 \text{ mils approx.}$$

Application of Laws to Cells. A consideration of the laws governing the resistance of wires of varying dimensions makes it obvious why a large cell has a lower internal resistance than a smaller one of the same type. The larger the plates the broader is the liquid between them as compared with the intervening distance. The former corresponds to the sectional area of the wire.

Effect of Temperature upon Resistance. The temperature was assumed to be the same in all the problems dealt with, and it is, therefore, necessary that the effect of varying the temperature should now be considered. In the case of all metals the resistance rises as the temperature is increased. In the case of copper wire the resistance increases about ·428 per cent

per degree for each degree Centigrade, or ·238 per cent for each degree Fahrenheit. A more accurate formula is—

$$R_t = R_{32}\{1 + \cdot0023708 \times (t - 32) + \cdot00000034548 \times (t - 32)^2\}$$

where R_t = Resistance at "t°" F.
and R_{32} = „ „ 32° F.

(The numerical coefficients were determined experimentally.)

Example 17. What is the resistance of a copper conductor at 52° F. if its resistance is 1000ω at 32° F. ?

$$R_t = 1000\{1 + \cdot0023708 \times 20 + \cdot00000034548 \times 20\}$$
$$= 1047\cdot554192\omega$$

By approximate rule (·238 per cent per degree F.)

$$\text{Increase} = \frac{1000}{100} \times \cdot238 \times 20$$
$$= 47\cdot6\omega$$
$$\therefore R_t = 1047\cdot6\omega.$$

In the case of carbon the resistance decreases with increase of temperature, and a similar remark applies to most liquid conductors, mercury being excepted. The warming of most insulators decreases their insulating power, i.e. lowers their specific resistances.

The effect of changes of temperature is far more marked with insulators than with conductors, for, whilst an increase of 15° F. would raise the resistance of a 1000ω copper conductor to 1036ω, a gutta-percha core would decrease from 9000 to 1000 megohms with the same rise in temperature. The equation connecting the resistances of insulators is of the exponential type, and varies largely with the quality as well as with the kind of material.*

In the case of gutta-percha the effect of pressure is very great. The insulation resistance of a submerged submarine cable greatly exceeds that observed at the factory. The deeper the cable is laid the higher is its

* *Handbook of Electrical Testing*, by H. R. Kempe, 6th edition, p. 470.

insulation resistance. This effect is due solely to the pressure exerted by the water, and amounts to $61\frac{1}{4}$ per cent per 1000 fathoms depth. Thus the insulation resistance of a cable measuring 100 megohms at atmospheric pressure would be increased to $222\frac{1}{2}$ megohms when laid at a depth of 2000 fathoms. India-rubber, on the other hand, decreases in resistance at the rate of about 16 per cent per 1000 fathoms when subjected to pressure.

Changes of temperature and pressure are found not to affect the true capacity of a G.P. cable. With india-rubber, a rise in temperature from 100° F. to 212° F. increased the capacity 140 per cent (Kempe).

Experiments carried out on a screened cable (31 per cent air, 69 per cent paper) show that the capacity varies with the insulation of the cable, the capacity falling from ·118 mf. at 2000 megohms, to ·108 mf. at 120,000 megohms per mile. The insulation is found to decrease from 20,000 megohms per mile at 16° C. to 2200 megohms at 44° C., but the capacity rises with the temperature from ·1219 mf. at 15° C. to ·131 mf. at 43° C. These variations do not, however, follow any simple law.

CHAPTER III

THE MAGNETIZATION OF IRON

ELECTRO-MAGNETS

The Solenoid. A magnetic field is generated by a loop of wire conveying a current (Fig. 4), but in order to produce large magnetic fields many loops or turns of wire are required. Each turn of wire adds its magnetic field to the other turns. A coil of wire consisting of a large number of such turns is termed a solenoid. The hand rule given on page 13 shows the direction in which the N. pole of a compass needle will move when a wire conveying a current is placed above or below it. A similar rule applies for finding the N. end or pole of a solenoid. The right hand, being placed round the solenoid so that the current is flowing in the direction of wrist to fingers, the outstretched thumb then points to the north end of the solenoid (Fig. 5, page 19).

The magnetic field due to a solenoid carrying a current can be shown by the distribution of iron filings scattered on a card arranged as shown in Fig. 20. The strength of this field depends upon the current and the number of convolutions or turns of wire. This point will, however, be considered more closely later on. The path or direction of the lines of force is indicated by the arrows in Fig. 20.

If, now, an iron core is inserted in the solenoid the magnetic effects are very greatly augmented. The iron is magnetized and adds its field to that of the solenoid. This fact may be expressed by stating that iron conducts lines of force far better than air and that, therefore, the introduction of iron into the magnetic circuit or path of the lines of force greatly increases their number. In order to obtain a magnetic

field of considerable strength from a comparatively small current it is necessary to have a large number

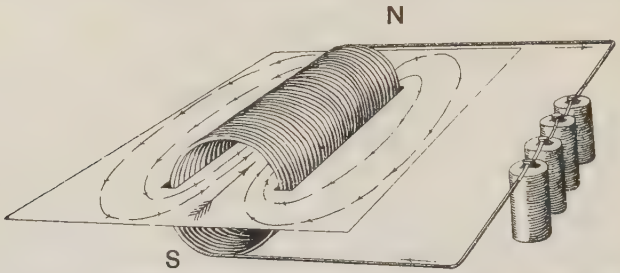

Fig. 20. Illustrates Magnetic Field Due to a Coil of Wire Carrying a Current

of turns of wire and to introduce into the magnetic circuit as small an air gap as possible.

An electro-magnet and armature are conventionally depicted in Fig. 21, the path of the lines of force being

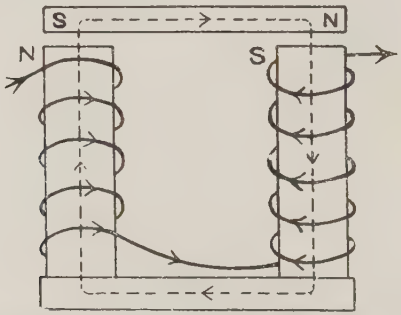

Fig. 21. Magnetic Circuit of an Electro-magnet and Armature

indicated by the dotted line. In order that the circuit may be as shown, the polarities of the upper ends of the cores must be opposite in character—a result which is readily obtained by reversing the direction of winding of the second core. Under the conditions illustrated in

the figure, the polarity at the top of the left core is north and at the top of the right core is south.

The result of energizing the electro-magnet is that the armature is attracted. This may be regarded as the result of the tension along the lines of force which causes them to shorten by producing a downward movement of the armature. Or that the armature assumes an induced polarity as shown by the figure, and that attraction results.

Residual Magnetism or Remanence. If a coil of wire is wound upon a continuous ring of iron and a current is passed through the windings, the iron becomes magnetized. Upon cessation of the current the magnetism will still remain, because there is nothing which tends to demagnetize the ring. The molecules form a continuous chain around the ring. The lines of force are, therefore, circles inside the ring itself, and there are no external north and south poles. In order to demagnetize the ring it is necessary to disturb the closed chains of molecules; this may be done by either a reverse current which reverses the direction of the magnetic field through the iron, or by shaking or hammering the iron and so disturbing the molecular chains. If, however, the ring is cut and straightened out it will be found that the iron becomes demagnetized immediately the current ceases, the amount of residual magnetism being negligible. The reason is that the lines of force in this case have to pass from the north to the south pole of the iron through the badly conducting air. Demagnetization may legitimately be regarded as due to the attraction between the north and south poles of the magnet acting through the length of the magnetized iron. In the case of steel it has been remarked that this effect, even in very short lengths of steel, is not sufficiently great to produce demagnetization and the result is a permanent magnet. In order that demagnetization may be rapid and complete, an iron core should be as short as practicable.

Applying this knowledge to the case of an electro-magnet it will be seen that the nearer the conditions of the closed ring are reproduced, the greater is the value of the magnetization which remains upon cessation of the current. When the armature is allowed to touch the cores no definite poles are created and there is little or no demagnetizing tendency, consequently, the armature " sticks " or " freezes."

It is, therefore, essential that a small air-gap shall be left in order that demagnetization may be produced by the action of the poles. It may also be remarked that the shorter the electro-magnet and the longer the air-gap the more rapid and complete is the demagnetization. With steel the demagnetizing tendency of the poles is quite insufficient to produce demagnetization. This fact is expressed by saying that the retentivity of steel is much greater than that of iron.

The residual value of the magnetism when the magnetizing force is withdrawn is termed the remanence. Referring to Fig. 23, the curve for steel shows a remanence of 10,800 and that for soft iron of 13,200. Reversal of the magnetizing force reduces and finally reverses the direction of the flux in the iron. The demagnetizing force required to reduce the flux to zero is termed the coercive force. The coercivity is defined as the demagnetizing force (value of H) required to do this after saturation. The coercivities for the soft iron and steel shown in Fig. 23 are respectively 7·5 and 15. The values for tungsten magnet steel and hardened magnet steel are, respectively, 27·5 and 52·6 and for cobalt-chromium steels (q.v.) from 200 to 250.

The Magnetic Circuit. A somewhat similar form of law, to Ohm's Law for electrical circuits, applies to magnetic circuits, a magnetic circuit being defined as the path of the magnetic lines of force. The law for a magnetic circuit is—

$$\frac{\text{magneto-motive force (in Gilberts)}}{\text{reluctance (in Oersteds)}} = \text{flux (in Maxwells)}$$

The magneto-motive force corresponds to E.M.F., the reluctance or magnetic resistance to resistance and the flux or number of lines of force flowing through the magnetic circuit to the current. The resistance of an electrical circuit of uniform dimensions may be written,

$$\text{Resistance} = \frac{\text{length}}{\text{sectional area}} \times \frac{1}{\text{specific conductivity}}$$

The corresponding relation for a magnetic circuit is—

$$\text{Reluctance} = \frac{\text{length}}{\text{sectional area}} \times \frac{1}{\text{permeability}}$$

Hence, permeability corresponds roughly to conductivity and is defined as the relative magnetic conductivity of material under the consideration compared with that of a vacuum, which is taken as unity. There is, however, this most important difference between an electric circuit and a magnetic circuit, that whereas the resistance of any particular conductor is the same for any value of current so long as the temperature remains constant, the reluctance varies with the magnetizing force. For example, with a magnetizing force of 2 the permeability is 2500, whilst with 350 it has fallen to 54. This phenomenon also, is fully accounted for in the molecular theory of magnetism (*q.v.*).

Considerable variations are observable in the permeability of different qualities of iron and steel: a few typical curves are shown in Fig. 22. The material "STALLOY" is a mixture of silicon, aluminium, and iron, and its magnetic properties are remarkable. It has, moreover, a high specific resistance. It will be observed from the curves that cast iron has a low permeability as compared with the other materials. The table on page 81 shows the values of the magnetizing force per square centimetre H, the flux per square centimetre B, and the corresponding permeability μ

(Greek letter μ, pronounced *mew*) for wrought and cast iron.

A certain magnetizing force H producing 5 lines per square centimetre in air would in soft iron produce

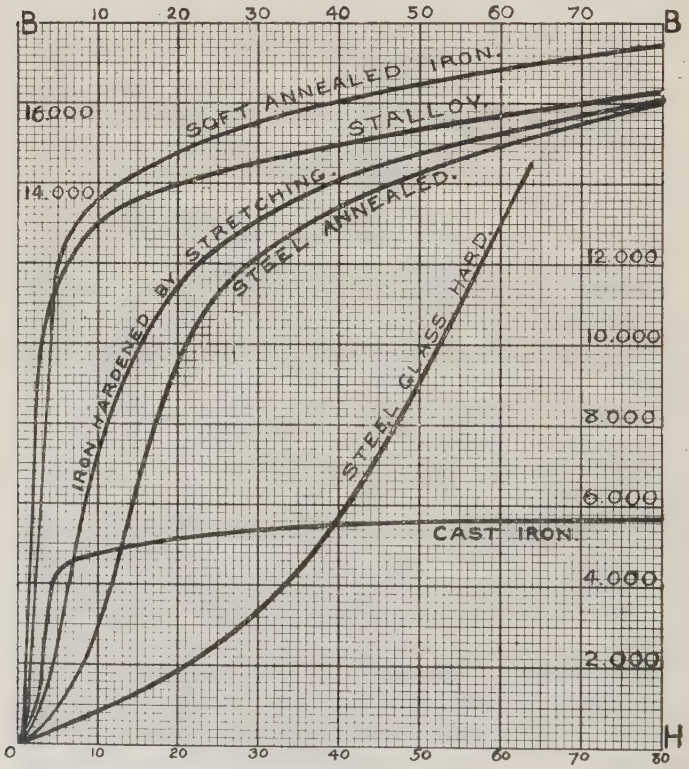

Fig. 22. Magnetization Curves for Iron, Steel, and Stalloy

a flux density of perhaps 10,000 lines per square centimetre. The permeability (μ) for this specimen of iron at this flux density (B) is then—

$$\mu = B/H \text{ (i.e. } 10000/5) = 2000.$$

Annealed Wrought Iron			Grey Cast Iron		
H	B	μ	H	B	μ
1·66	5000	3000	5	4000	800
4	9000	2250	10	5000	500
5	10000	2000	21·5	6000	279
6·5	11000	1692	42	7000	166
8·5	12000	1412	80	8000	100
12	13000	1083	127	9000	71
17	14000	823	188	6000	32
28·5	15000	526	292	11000	37
50	16000	320			
105	17000	161			
200	18000	90			
350	19000	54			
666	20000	30			

If a circular ring of square cross section is formed of this material its reluctance Z is equal to its mean circumference (length of magnetic circuit) divided by its sectional area and its permeability (2000).

Given that the internal diameter of the ring is 8 cm. and its external diameter 12 cm. What is the value of Z? Mean diameter $= \dfrac{8 + 12}{2} = 10$ cm., Sectional area $2^2 = 4$ sq. cm.

$$\text{Its reluctance } Z = \frac{\text{length (i.e. mean circumference)}}{\text{sectional area} \times \mu}$$

$$= \frac{\pi \times 10}{2^2 \times 2000} = \frac{31{\cdot}416}{8000} = {\cdot}00393$$

Had the ring been of circular cross section its area would have been $\cdot 7854 \times 2^2$ instead of 2^2 sq. cm., and its reluctance therefore ·005. If the permeability had been 1000, the reluctance would of course have been twice as great, viz. ·00786 and ·01 respectively.

Example. What is the reluctance of a soft iron ring having

a sectional area of 2 sq. cm. and a mean diameter of 20 cm. for a magnetizing force H of 17 ?

Length of magnetic circuit $= \pi \times 20 = 62{\cdot}83$ cm.
Sectional area $= 2$ sq. cm.
If $H = 17$ (from table) $B = 14{,}000$
and $B/H = \mu = 823$

$$\therefore \text{ Reluctance } Z = \frac{62{\cdot}83}{2 \times 823} = {\cdot}0382 \text{ approx.}$$

Note that the permeability depends on the flux density B—not on the total flux N which is the flux density multiplied by the sectional area, i.e. $B \times a$. In the last example the total flux N is 14,000 $\times$ sectional area.

$$N = 14{,}000 \times 2 = 28{,}000 \text{ lines.}$$

The reluctance of the magnetic circuit illustrated in Fig. 21 may be calculated in similar fashion, given the various dimensions—

Length of each circular core . . .	5 cm.
Sectional area of each circular core . .	4 sq. cm.
Length of armature and yoke from centre to centre of core.	4 cm.
Armature and yoke, sectional area . .	4 sq. cm.
Air gap at each pole	·05 cm.

Let $N = 40{,}000$. $\therefore B = 10{,}000\ \mu$ (from table) $= 2000$

$$\text{Cores } Z = \frac{5}{4 \times 2000} \times 2 = {\cdot}00125$$

$$\text{Armature and yoke } Z = \frac{4}{4 \times 2000} \times 2 = {\cdot}001$$

$$\text{Air gaps } (\mu \text{ for air} = 1) Z = \frac{{\cdot}05}{4 \times 1} \times 2 = {\cdot}025$$

Total $Z = {\cdot}02725$ (for $\mu = 2000$).

The area of the air gap has been assumed to be equal to that of the core, and this assumption is fairly accurate if the air gap be small, so that the lines in passing from the core to the armature do not spread out very much. It would be necessary also to add a certain amount of reluctance for each joint between the core and the yoke. It will, however, be realized that the main portion of the reluctance of any magnetic circuit is in the air gaps.

Magneto-motive Force. The absolute unit of current is defined in terms of the magnetic effect which it

produces under certain conditions. A circular loop of wire carrying a current of 10 amp. produces a magnetic field of 2π lines per square centimetre at its centre. (See page 110.)

The magnetizing force H of a solenoid can be shown to be—

$$H = 4\pi nC \div 10l$$
$$= 1{\cdot}257 \times \text{amperes} \times \text{turns per cm. length}$$

where n is the number of convolutions and l is the length of the solenoid.

The total flux

$$N = \text{flux per sq. cm.} \times \text{sectional area}$$
$$= Ba$$

B is defined as μH

$$\therefore N = Ba = \mu Ha$$
$$= \mu \times (4\pi nC \div 10l) \times a$$
$$= 1{\cdot}257nC \div l/\mu a$$
$$= 1{\cdot}257 \text{ amperes} \times \text{turns} \div l/\mu a$$

Magneto-motive force is defined as $1{\cdot}257 \times$ ampere turns, $l/\mu a$ as the reluctance (for a permeability of μ) and N is the total flux.

Here it will be well to note the value of H depends upon the product of the current and the number of convolutions, the same effect being produced with 200 turns each carrying 2 amp., as with 40 turns carrying 10 amp. In each case 400 amp. turns are produced.

The total number of lines of force N flowing through a solenoid is readily obtained from the previous definitions.

$$N = \frac{1{\cdot}257 \text{ ampere turns}}{\dfrac{\text{length}}{\text{sectional area}} \times \dfrac{1}{\text{permeability}}}$$

and as the permeability of air is unity,

$$N = \frac{1{\cdot}257 \text{ ampere turns} \times \text{sectional area}}{\text{length}}$$

(i.e. 1·257 ampere turns per centimetre length of the solenoid × sectional area)

or $H = 1{\cdot}257$ ampere turns per centimetre length.

This value is independent of the diameter of the solenoid.

EXAMPLE. A solenoid 50 cm. long and 10 cm. in diameter having 200 turns of wire carries a current of 5 amperes. What is the total flux ?

$$N = \frac{1{\cdot}257 \text{ ampere turns}}{\text{length}} \times \text{sectional area}$$

$$= \frac{1{\cdot}257 \times 5 \times 200}{50} \times {\cdot}7854 \times 10^2$$

$$= 1974 \text{ lines.}$$

The intensity of the field in a long solenoid is equal to 1·257 times the number of ampere turns per centimetre of length. At the mouth of such a spiral the intensity of the field is exactly half what it is midway between the ends, hence in the previous example the flux along the middle portion of the coil will be 1974 lines and 987 lines at the open ends.

EXAMPLE. What is the value of the magnetizing force and of the magneto-motive force in the previous example ?

$$\text{M.M.F.} = 1{\cdot}257 \times \text{ampere turns}$$

$$= 1{\cdot}257$$

$$\text{Magnetizing force } H = \frac{1{\cdot}257 \times \text{ampere turns}}{\text{length}}$$

$$= 25{\cdot}14$$

EXAMPLE. What magneto-motive force will be required to produce 100 lines per square centimetre through a solenoid 100 cm. long having a sectional area of 5 sq. cm. ?

$$\text{Total flux } N = 100 \times 5 = 500$$

$$\text{M.M.F.} = 500 \times \text{reluctance}$$

$$= 500 \times \frac{100}{5} = 10{,}000$$

EXAMPLE. A solenoid 25·14 cm. long having 2000 turns, with a mean diameter of 5 cm., carries a current of 3 amperes.

What is (*a*) the total flux, (*b*) the magnetizing force, and (*c*) the magneto-motive force?

(*a*) Total flux

$$N = \frac{1{\cdot}257 \times \text{ampere turns} \times \text{sectional area}}{\text{length}}$$

Ampere turns $= 3 \times 2000 = 6000$
Sectional area $= {\cdot}7854 \times 5^2 = 19{\cdot}63$

$$\therefore N = \frac{1{\cdot}257 \times 6000 \times 19{\cdot}63}{25{\cdot}14}$$

$= 5887$ lines.

(*b*) Magnetizing force

$$H = \frac{1{\cdot}257 \times \text{ampere turns}}{\text{length}}$$

$$= \frac{1{\cdot}257 \times 6000}{25{\cdot}14} = 300$$

(*c*) Magneto-motive force

$= 1{\cdot}257$ ampere turns
$= 1{\cdot}257 \times 6000$
$= 7542$

All the relations required for the calculation of the current required to produce a given flux in any specified magnetic circuit have now been considered—

EXAMPLE. An iron ring 10 cm. mean radius and 5 sq. cm. cross section, wound with 900 turns of wire, has an air gap 1 cm. wide. What current will be required to produce a flux of 50,000 lines through the air gap?

$B = 50{,}000/5 = 10{,}000$. $\therefore$ from table $\mu = 2000$

Total length of magnetic circuit $= 2\pi \times 10$	$= 62{\cdot}83$ cm.
Length of iron	$= 61{\cdot}83$ cm
Reluctance of iron $\frac{61{\cdot}83}{2000 \times 5}$	$= {\cdot}006183$
Reluctance of air gap $= \frac{1}{1 \times 5}$	$= {\cdot}2$
Total reluctance	$= {\cdot}2062$
M.M.F. $=$ flux $\times$ reluctance $= 50{,}000 \times {\cdot}2062$	$= 10{,}310$

$$\text{M.M.F.} = \frac{4\pi \times \text{ampere turns}}{10} = 1{\cdot}257 \times \text{ampere turns}$$

$$\therefore 10{,}310 = 1{\cdot}257 \times 900 \times \text{current}$$

$$\text{Current} = \frac{10310}{1{\cdot}257 \times 900} = 9{\cdot}11 \text{ amperes.}$$

Hysteresis. If the magnetizing current be gradually increased to a maximum, and gradually reduced to zero, then to a maximum in the opposite direction, then reduced to zero, and finally increased to its maximum again in the original direction, it will be found that the curve shown in Fig. 23 is traced out on connecting the points at which the values of the resulting magnetization are observed. The magnetization lags behind the magnetizing force, and this phenomenon is termed hysteresis. The area enclosed by the curve is proportional to the energy wasted in taking the material through a magnetization cycle, as this treatment is termed. In the case of soft iron the energy wasted is small, but for steel, where a large area is enclosed by the curves, it is considerable. Hysteresis losses, which increase with the frequency of the current, occur wherever alternating currents are used, but in telegraphy such losses are usually small, owing to the use of high grade soft iron, and the fact that high values of flux density are not ordinarily required.

In alternating current power work the loss at 50 cycles per second when B does not exceed 5000 may be as low as 130 watts, but if B is increased to 10,000 the waste becomes 360 watts in every cubic foot of iron. Hysteresis should be regarded as an internal magnetic friction, the power wasted being dissipated in heating the iron.

"Stalloy," in addition to high electrical resistance and a permeability equal almost to the best soft iron, has a very low hysteresis loss.

The area of the hysteresis curve or loop is directly proportional to the energy (E) lost or dissipated (in the form of heat)

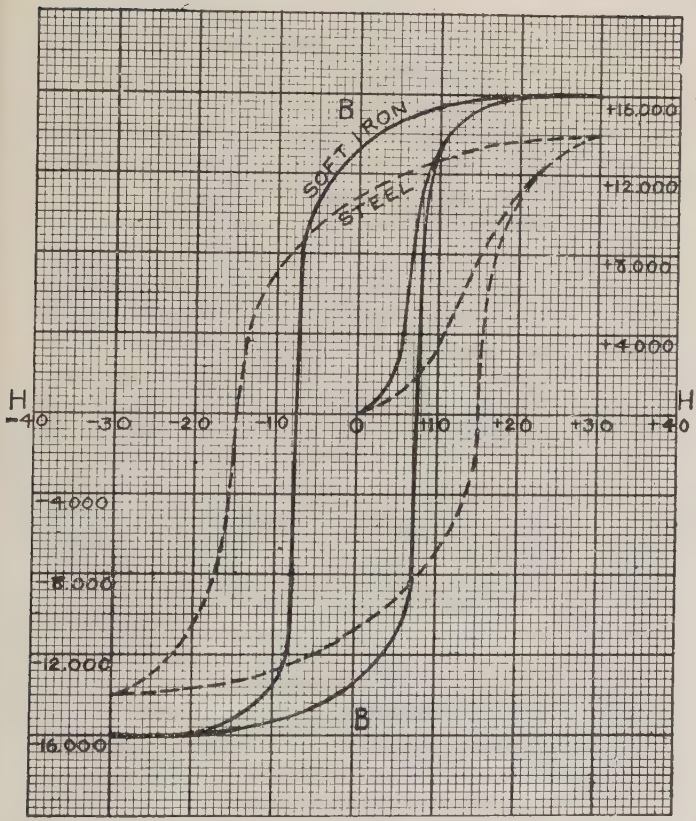

FIG. 23. (I) HYSTERESIS CURVE FOR SOFT IRON AND (II) FOR STEEL (DOTTED CURVE)

per cycle and may be computed by the Steinmetz formula, $E = nB^{1.6}$ where n is a constant varying from ·0007 for stalloy, ·0032 for soft Swedish wrought iron, to ·015 or more for unannealed cast steel.

Eddy Currents. Any motion of a solid conductor in a magnetic field produces currents circulating in the body of the material. These currents oppose the motion to which they owe their origin (Lenz's law) and

so tend to retard or slow down that motion. Examples of the effect are furnished by the copper or silver frame on which the moving coil of a D'Arsonval galvanometer (*q.v.*) is wound. A magnetic material subject to motion in a magnetic field should have high resistivity so as to minimize the energy loss and to secure rapidity of movement. Stalloy fulfils this condition.

Pull of a Magnet. The pull or lifting power of a magnet on an armature in contact with its poles is proportional to the *square* of the flux density,* hence with a given total flux from a magnet, the pull on its armature is doubled if the area of the pole piece is halved. The limit to the reduction in the size of the pole piece is at the point where saturation occurs.

Winding of Electro-magnets. The length of wire of given diameter which can be wound upon a bobbin of specified dimensions is equal to the product of the number of turns in a layer, the number of layers, and the average length of a turn of wire.† A numerical example will, perhaps, best illustrate this.

EXAMPLE. What length of wire 10 mils in diameter can be wound upon a bobbin 3 in. long between the cheeks, with a core diameter of $\frac{1}{2}$ in. and an outer diameter of 2 in. ?

Number of turns in each layer $= \dfrac{3}{\cdot 01} = 300$

Number of layers $= \frac{1}{2}(2 - \frac{1}{2}) \div \cdot 01 \quad = 75$

$\therefore$ Total number of turns $= 300 \times 75 = 22{,}500$

---

* It can be shown that the pull in dynes $f = \dfrac{B^2 A}{8\pi}$ where B is the flux density and A the area in sq. cm. When $B = 1000, f = 39{,}790$ dynes per sq. cm., or ·577 lb. per sq. in. ; hence for $B = 2000$ the pull is $2^2 \times \cdot 577 = 2{\cdot}308$ lb. per sq. in. and for $B = 20{,}000$ is 230·8 lb. per sq. in.

† Let d = diameter of the wire in inches.
h = distance between the cheeks in inches.
d_1 = diameter of core in inches.
d_2 = diameter of outer windings in inches.
l = length of wire in inches.

then $l = \dfrac{\pi h}{4d^2}(d_2^2 - d_1^2)$

Length of shortest turn $= \pi \times \frac{1}{2}$
Length of longest turn $= \pi \times 2$
Length of average turn $1{\cdot}25\pi = 3{\cdot}927$ in.
$\therefore$ Length $= 22{,}500 \times 3{\cdot}927 = 88{,}357$ in.
$= 2454$ yd.

Since the effect of an electro-magnet depends upon the number of ampere turns, one or two useful rules may be deduced. One is that the maximum effect is produced by any given type of apparatus when it is wound to a resistance equal to the resistance of the rest of the circuit. The assumption made is that the windings occupy precisely the same space and that the wire is of the same material but of different gauge in the two instances. The relation is a trifle more complex when the thickness of the insulating covering upon the wire is taken into account, but the approximate rules which will be indicated are sufficiently near to the true results to be of considerable value.

The length of wire, and hence the number of turns of wire, which can be wound upon a bobbin of given dimensions is inversely proportional to the square of the total diameter of the wire. Thus—

$$l_1 : l_2 :: (d_2)^2 : (d_1)^2$$

also

$$n_1 : n_2 :: (d_2)^2 : (d_1)^2$$

where l_1 and l_2, d_1 and d_2, n_1 and n_2 represent respectively the lengths, diameters, and number of turns of wire in each case.

But the relative resistances of the windings R_1 and R_2 in the two cases may be expressed thus—

$$R_1 : R_2 :: l_1 \times (d_2)^2 : l_2 \times (d_1)^2$$

Substituting for l_1 and l_2 the relative values in terms of the diameter of the wire which can be wound upon the bobbin,

$$R_1 : R_2 :: (d_2)^2 \times (d_2)^2 : (d_1)^2 \times (d_1)^2$$

i.e.

$$R_1 : R_2 :: d_2{}^4 : d_1{}^4$$

but

$$n_1{}^2 : n_2{}^2 :: d_2{}^4 : d_1{}^4$$

$$\therefore \quad n_1 : n_2 :: \sqrt{R_1} : \sqrt{R_2}$$

The last relation states that the *number of turns* of wire wound upon an electro-magnet is *directly*, and hence its *figure of merit* is *inversely*, proportional to the square root of the resistance of the windings.

The application of these principles may best be shown by a series of numerical examples.

EXAMPLE 1. The coils of a trembler bell (50^{ω} per coil) can be connected in series or in parallel. Which method is preferable when the bell is directly connected to two cells in series, each having an E.M.F. of 1^{V} and an internal resistance of 5^{ω} ?

The magnetic effects, M_1 and M_2, are proportional to the ampere turns ($A \times T$) in each case.

$$M_1 : M_2 :: A_1 \times T : A_2 \times T.$$

In series, current $= \dfrac{2}{100 + 10} = \cdot 0182$ amperes.

In parallel, current $= \dfrac{2}{25 + 10} = \cdot 057$ amperes.

The current in each coil in the latter case is ·0285 amperes, since they are in parallel.

$$\therefore M_1 : M_2 :: \cdot 0182 \times T : \cdot 0285 \times T.$$

i.e. $$M_1 : M_2 :: \cdot 0182 : \cdot 0285.$$

Hence the coils should be placed in parallel.

EXAMPLE 2. An electro-magnet with two equal coils, each having a resistance of 10^{ω}, is connected to a battery having an E.M.F. of 20^{V}, and an internal resistance of 10^{ω}. Should the coils be connected in parallel or in series ?

In series, current $= \dfrac{20}{20 + 10} = \dfrac{2}{3}$ amperes.

In parallel, current $= \dfrac{20}{5 + 10} = \dfrac{4}{3}$ amperes.

(i.e. $\frac{2}{3}$ amperes in each coil).

$$\therefore M_1 : M_2 :: \tfrac{2}{3} : \tfrac{2}{3}$$

The magnetic effects are equal in the two cases. Since the value of the current in the first case is half that in the second, and the energy expended is also half as much, the series arrangement is to be preferred. Moreover, the internal resistance of the battery is likely to rise.

EXAMPLE 3. An electro-magnet is wound with wire having a diameter of 20 mils, to a resistance of 320^{ω}. With what

diameter of wire must it be re-wound in order that its resistance may be 20ω ?

$$R_2 : R_1 :: d_1^4 : d_2^4$$
i.e. $$20 : 320 :: 20^4 : d_2^4$$
$$\therefore d_2^4 = \frac{320 \times 20^4}{20} \text{ mils}$$
$$d_2^2 = \sqrt{16 \times 20^4 \text{ mils}} = 1600 \text{ mils}$$
$$d_2 = 40 \text{ mils}$$

EXAMPLE 4. An instrument wound to a resistance of 1000ω requires a current of 7 mA to work it satisfactorily. What current will be required to produce the same effect if it is re-wound to a resistance of 100ω ?

$$\sqrt{R_1} : \sqrt{R_2} :: n_1 : n_2$$
$$\sqrt{1000} : \sqrt{100} :: n_1 : n_2$$
i.e. $$31{\cdot}62 : 10 :: n_1 : n_2$$

Since the effects are equal,

$$n_1 \times {\cdot}007 = n_2 \times C$$
i.e. $$31{\cdot}62 \times {\cdot}007 = 10 \times C$$
$$\therefore C = \frac{{\cdot}007 \times 31{\cdot}62}{10} = 22 \text{ mA approx.}$$

EXAMPLE 5. Two electro-magnets of precisely equal dimensions are wound with the same volume of wire, but the first is wound with 14 mils wire, and the second with 4·5 mils wire. What current will be needed to produce the same effect with the second electro-magnet that 200 mA produces with the first ?

$$d_2^2 : d_1^2 :: n_1 : n_2$$
i.e. $$4{\cdot}5^2 : 14^2 :: n_1 : n_2$$

Since the effects are equal,

$$n_1 \times {\cdot}2 = n_2 \times C$$
i.e. $$4{\cdot}5^2 \times {\cdot}2 = 14^2 \times C$$
$$\therefore C = \frac{{\cdot}2 \times 4{\cdot}5^2}{14^2} = 20{\cdot}7 \text{ mA approx.}$$

Qualities of Iron for Electro-magnets. For electro-magnets, only very soft wrought iron or "stalloy" having high permeability can be used, it being essential that changes in current shall produce the maximum changes in flux—as, for example, in the core of a relay.

The method used by the Post Office Engineering

Department for annealing the cores of *G* and *H* relays employs a silica tube electric furnace, the heater being nichrome wire. The cores are tied up in bundles of six and placed in the tube, the ends of which are closed with bungs. Inert gas (hydrogen or nitrogen) is passed in a slow stream at atmospheric pressure through the tube to prevent oxidation and scaling. The temperature, which is checked by a thermo-couple calibrated on a voltmeter, is raised to 950° C. and maintained for 4 hours. The cores then are allowed to cool in the furnace for about 16 hours, with the gas passing all the time. Very good results are obtained from good quality iron, the coercivity being of a very small order.

The precise shape and arrangement of the electromagnet depends upon the purpose for which it is used.

It is, however, probable that the nickel iron alloys which have recently been developed will find extensive application in future apparatus designs.

Nickel-iron Alloys. Permalloy is an alloy of from 70 per cent to 82 per cent of nickel with 30 per cent to 18 per cent only of iron, the best result being obtained with 78·5 per cent of nickel ; all impurities are kept as low as possible. The heat treatment is specially important and consists in heating the alloy to 900° C. for an hour, cooling slowly, reheating to 600° C. at a definite rate, this rate for the tape form in which the alloy is chiefly produced being little different from that given by cooling in air.*

Mumetal, a British product, possesses similar properties ; it contains 74 per cent to 75 per cent nickel with 20 per cent to 25 per cent of iron and certain quantities of copper and manganese.

Fig. 24† contrasts the hysteresis loops of permalloy and a low carbon cast iron. Very small hysteresis loss,

* W. T. Griffiths, " Nickel-iron Alloys," *Electrician*, 26 November, 1926.

† T. D. Yensen, *Journal*, Franklin Institute, 1925, 199, p. 333.

and coercive force with extraordinarily high permeability for low magnetizing forces are indicated ; indeed, saturation is reached in the earth's magnetic field (·18). The alloy has, moreover, a high resistivity, thus minimizing eddy current losses. So far, the principal field of application has been in the direction of continuous loading for submarine cables, the material being applied

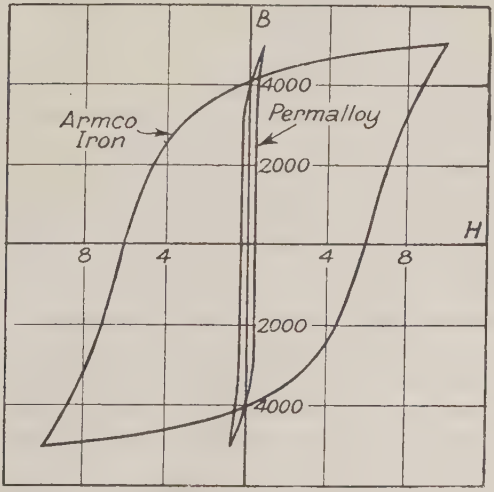

Fig. 24. Hysteresis Curves of Permalloy and Armco Iron

in the form of a tape about $\frac{1}{8}$ in. wide, and 6 mils in thickness, wrapped spirally around the copper conductor. It adds an inductance of about 50 millihenrys per nautical mile to the cable.

It is exceedingly important that the material should be protected from stress or " work " after treatment, as the magnetic properties are very greatly reduced by overstrain. Heat treatment will, however, restore the best characteristics. In the case of the loaded cable it is usual to heat treat the core after the nickel-iron alloy tape has been wound on the copper.

With about 30 per cent nickel and 70 per cent iron a material which is practically non-magnetic is obtained. Between this and the 80 per cent nickel alloys, various ranges of magnetic characteristics are obtainable. For example, where high resistivity combined with high permeability is desired, an alloy between 40 and 50 per cent nickel might be selected, whereas if high resistivity and low permeability are needed, the 30 per cent alloy could be used.

A non-magnetic cast iron* to replace brass and gunmetal has been produced (Dawson-Ferranti patents) under the name of No-mag. Its specific resistance is over 50 per cent greater than that of iron and its permeability (1·03) little more than that of air or brass. It contains 10 per cent nickel and 5 per cent manganese, has good mechanical properties and is easily machinable.

Permanent Magnets. No steel is of any use unless it is capable of being hardened by quenching. Hardenable steels comprise two groups of material : the high carbon steels containing from ·3 to 1·5 per cent of carbon, and the alloy steels containing, along with a certain percentage of carbon, a notable quantity of one of the metals tungsten, molybdenum, chromium, or vanadium.

The steel used should have high retentivity and coercivity. Chromium, tungsten, and molybdenum all impart these properties to iron. Oil-hardened chrome steels (1 to 3 per cent) have coercivities from 30 to 60 ; tungsten steels (2 to 7 per cent) from 50 to 85, and molybdenum steels (3 to 4 per cent), 80 to 85. The " ageing " of such magnets is a process of considerable importance, since it secures practical invariability of the magnetism, thus rendering the indications of a measuring instrument using such a magnet practically constant. A uniform glass-hard temper is first obtained by quenching. The steel is then

* " Non-magnetic Cast Iron," by S. E. Dawson, *The Foundry Trade Journal*, 29 May, 1924.

annealed for 20 to 30 hours in steam and then magnetized to saturation. This is followed by a second immersion in steam for five hours to secure permanence of the magnetic properties. The best permanent magnet steels are 5 per cent tungsten steel and 4 per cent molybdenum steel—both hardened at 800° to 850° C. and aged as described above.*

Recently, it has been found that cobalt steel permanent magnets, containing 15 to 35 per cent of cobalt, have a coercive force of between 200 and 250 when suitably hardened. Even in the soft state their coercive force is between 50 and 60 with remanence from 9000 to 12,000 which compares favourably with tungsten steel. Cobalt-chromium steels only require air hardening, but the temperature varies with the composition of the alloy. For satisfactory results the temperature must be secured within 10° C. above or below the correct value. The best results were obtained with 1 to 1·3 per cent carbon, 4 to 5 per cent manganese, 4 to 5 per cent chromium, and 30 to 35 per cent cobalt, but good results were obtained with only 20 per cent cobalt.

In order to obtain the best results with these steels, the magnetization must be carried out with a much greater magnetizing force than in the case of ordinary magnet steels. While 500 Gilberts is sufficient for tungsten steel, cobalt steels require 1500 Gilberts to obtain their full remanence and coercive force.

These cobalt steels effect a saving of over 50 per cent in weight as compared with tungsten steels, but they are expensive, and as yet no precise data as to their ageing properties are available.†

The precise method of magnetizing is relatively unimportant if a sufficiently powerful electro-magnet is provided to impart the magnetism. The steel

* Whittaker's *Electrical Engineer's Pocket Book*, p. 88.

† "Alloy Steels for Permanent Magnets," by F. O. Barralet and W. G. Radley, *P.O.E.E. Journal*, Vol. XV, p. 344.

should be placed on the poles of the electro-magnet, or, if a bar, it may be placed in a powerful magnetizing coil and magnetized to the highest degree possible. There is some advantage in reversing its magnetism a few times. There is no advantage in magnetizing for a long time, as the result depends on the maximum magnetizing force applied and not on the duration of application. But in the final magnetization, the magnetizing current should not be suddenly switched off, but should be diminished gradually to zero. There appears to be some slight advantage in subjecting the magnet during magnetization to mechanical percussion by striking it with a hammer composed of brass or other non-magnetic but hard material.

For magnets which are required to have extreme constancy, such, for example, as those employed in high grade measuring instruments, there is an advantage in slightly reducing their magnetism by subjecting them to demagnetizing forces, a reduction of from 5 to 10 per cent being sufficient. It is doubtful whether this process is necessary for magnets the form of which is a closed circuit with a very narrow gap. There is supposed also to be some advantage from the point of view of constancy in subjecting the finished magnet to percussion.

A simplified method of magnetization is embodied in a German patent taken out by Dr. Beckmann* by which the necessary heavy rush of current is obtained from a heavy copper conductor forming the secondary winding of a transformer which is magnetized or demagnetized momentarily by switching the primary on or off from an ordinary direct current supply source —switching off, however, appears on the whole to be preferable to switching on. The method avoids the necessity for somewhat special plant such as a large

* Magnetizing Permanent Magnets (abstracted from a paper read before the Electrotechnischer Verein) by Dr. E. Schulze, *Electrical Review*, 24 August, 1928.

capacity secondary battery or a low voltage homopolar dynamo to furnish the heavy currents required, it being possible to obtain a current of as much as 2000 amperes in the secondary from 30 in the primary. The current on switching off rises very rapidly to its full value and then gradually falls to zero. Extraordinarily strong magnetization can be produced in the magnets and, if desired, this can then be slightly weakened by the application of alternating current so as to ensure greater constancy (freedom from ageing).

It is often stated that a more powerful magnet may be obtained by making it up of a series of thin magnets, each separately magnetized on the assumption that the magnetic condition is confined largely to the outer layers of the iron. With modern methods of magnetization by powerful electro-magnets it is found that a solid magnet can be made quite as powerful as a laminated magnet of similar dimensions.

The value of the keeper placed across the poles of a horse-shoe permanent magnet is also very doubtful, its effect being to strengthen the magnet every time it is pulled off but to weaken it when it is restored to the poles.

CHAPTER IV

THE MEASUREMENT OF CURRENT AND E.M.F.

PART I.—RESISTANCE COILS

A SET of resistance coils or a resistance box is, perhaps, one of the most useful and necessary adjuncts in electrical testing. These boxes contain coils of wire of definite resistance, which can be brought into circuit or cut out at will. The wire forming the resistance coil is wound upon a bobbin in a special manner—the reason for which will receive consideration later—and is well insulated with one or two layers of silk covering wound spirally upon the conductor.

The coils are connected between a series of brass blocks cut to receive a tapered circular peg between each block and its neighbour (Fig. 25). With all the plugs in position, the brass block forms a continuous conductor of negligible resistance between the two terminals. The removal of any plug inserts a resistance coil between the terminals of the instrument of the value marked near the two brass blocks. In the case illustrated (Fig. 25) the 2^{ω}, 3^{ω}, and 4^{ω} coils are in circuit, that is to say, a resistance of 9^{ω} is introduced between the terminals. The 1^{ω} coil in this case is short-circuited by the plug.

The brass blocks are fitted upon a slab of ebonite, a material possessing very high insulating qualities. The brass blocks are recessed upon either side, beneath the plug holes, in order to provide facilities for cleaning the ebonite and removing all dust, dirt, or metallic filings, due to the continual twisting of the plugs in their holes. Where specially high insulation is required, the blocks are usually mounted on ebonite pillars.

The brass plugs usually take one of two forms—either a turned plug of brass or a plug of brass with an

ebonite handle. The latter is the preferable form on account of the superior grip which can be obtained upon it. It is a matter of considerable importance that the plugs should fit accurately and tightly, and that the contact surfaces should be kept bright and clean. Where accuracy is required, these points must receive very careful attention, for it will be obvious that even

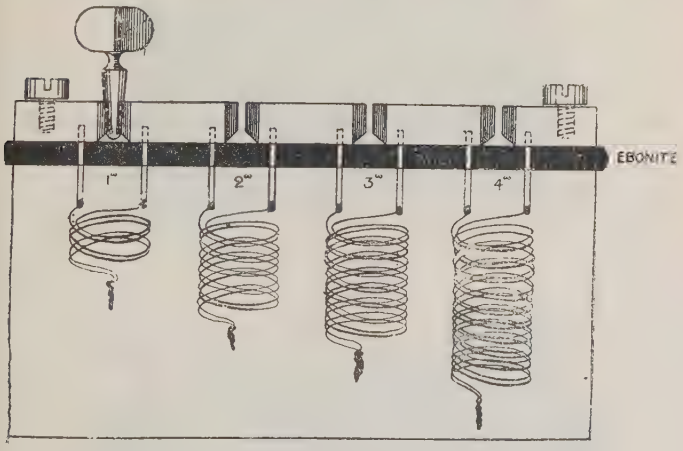

FIG. 25. CONNECTIONS AND WINDINGS OF A SET OF RESISTANCE COILS

four bad contacts in series will produce a considerable amount of resistance which should not be present. Again, this resistance will vary with the manner in which the plug is inserted. A plug should be put in firmly with a twisting motion in order to ensure a good contact. Neglect of this simple and obvious precaution often produces somewhat serious errors. Upon the other hand, resistance boxes must be handled carefully, and the use of considerable force in putting in the plugs is strongly deprecated.

The values given to the coils are usually as follows : 1, 2, 3, 4 ; 10, 20, 30, 40 ; 100, 200, 300, 400, etc. The four

coils, shown in Fig. 25 have the values 1^{ω}, 2^{ω}, 3^{ω}, and 4^{ω}, and it will, therefore, be seen that any resistance from 1^{ω} to 10^{ω} by gradations of 1^{ω} can be thrown into circuit. This is termed a set of unit coils. With 1, 2,

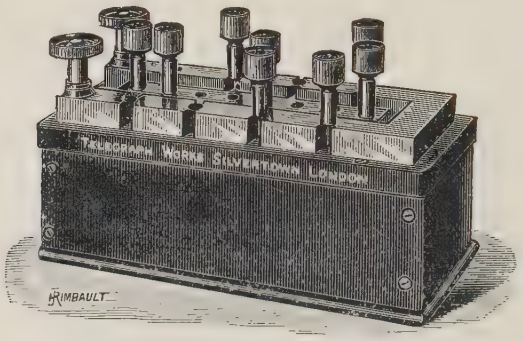

FIG. 26. RETARDATION COILS

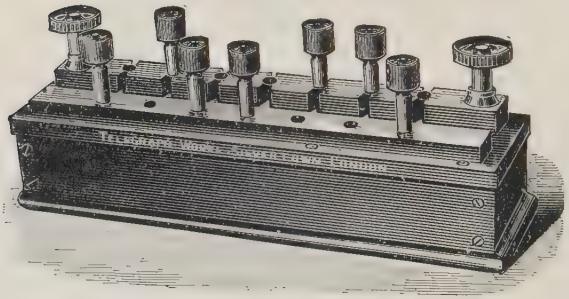

FIG. 27. CONDENSER COILS

3, 4 units and corresponding tens any resistance from 1^{ω} to 110^{ω} by gradations of one ohm can be obtained. Four "units" coils, four "tens" coils, four "hundreds" coils, and four "thousands" coils, provide for any integral resistance from 1^{ω} to $11{,}110^{\omega}$.

Two forms of resistance box employed in practical telegraphy are illustrated in Figs. 26 and 27. The former, known as a set of "retardation coils," on

account of the purpose to which it is put (see Chapter IX), has eight coils of the following resistances: 10^{ω}, 20^{ω}, 30^{ω}, 40^{ω}, 100^{ω}, 200^{ω}, 300^{ω}, 400^{ω}. This gives 10^{ω} to 1100^{ω} by gradations of 10^{ω}. The second form used for a similar purpose is in contradistinction known as a set of "condenser coils." The resistance of its seven coils are respectively 50^{ω}, 100^{ω}, 200^{ω}, 300^{ω}, 400^{ω}, 1000^{ω}, and 2000^{ω}, i.e. 50^{ω} to 4050^{ω} by gradations of 50^{ω}. Both these sets of coils are used in cases where the absolute accuracy of the resistance is of very little consequence, and the form chosen is, therefore, simpler than that of those previously illustrated.

In another type of resistance coils, the resistance required is introduced by plugging in at one point with a single plug. For 10^{ω} with steps of 1^{ω}, ten 1 ohm coils are necessary, and the arrangement is, consequently, more expensive than the type previously described. In many modern sets used for measurements requiring a high degree of accuracy, a radial brush arm similar to that used on the rheostat *D* (Fig. 29) is employed. An accuracy within ·02 per cent or less is readily obtainable.

Type of Wire to be Used. The material of which the wire for a resistance coil is composed is a matter of considerable importance. Copper wire is quite inadmissible on account of its large variations in resistance with changes of temperature. Again, where a large resistance is required, the quantity of wire necessary would render the coils very bulky, or extremely fine wire would have to be employed.

Precautions must be taken to ensure permanent accuracy; stresses in the material are avoided, and any residual strains removed by careful "ageing" after the coils are wound. In this way the change of resistance over a period of years can be kept within ·005 of 1 per cent.

Alloys in general have high resistivity and small temperature variation of resistance as compared with

pure metals. Those generally employed are stated in the following table.

Material	Composition	Resistivity per cub. cm. at 18° C. in microhms	Temperature Coefficient per cent per degree C.
Annealed copper	100% Cu	1·6963	·428
Nickel silver	60 Cu 15 Ni 25 Zn	16 to 40	·023 to ·06
Platinum silver	67 Pt 33 Ag	24·2	·024 to ·033
Platinoid	Cu 59 Zn 25·5 Ni 14 Tungsten 1·5	34·4	·025
Constantan (eureka)	60 Cu 40 Ni	49	−·004 to +·001
Manganin	84 Cu 12 Mn 4 Ni	44·5	·0002 to ·005

Platinum silver has, on account of its cost, only been used for extremely important standards. It is known to age very little, to be subject to no oxidation, and has a small and very accurately known temperature variation of resistance. Nickel silver is the oldest of these resistance alloys, but is now superseded by manganin and constantan (eureka), both of which have negligible temperature coefficients.

All resistance coils are marked with the temperature at which they are correct, and this is usually made 15·5° C. or 60° F. In the case of very important standard coils the temperature variation is carefully determined, and a certificate as to this and the resistance of the coil is provided by the makers.

Gauge of Wire. The gauge of the wire to be employed next requires consideration. Where cost and size are no object the gauge should be large, since this will give great accuracy of adjustment, and any rise of temperature due to the passage of a current through it will be reduced to the lowest possible value. Naturally, a wire with a large surface will radiate any heat generated much faster than a smaller one, and its temperature will, consequently, be lower. In practice, however, the questions of cost and bulk are distinctly

important, and, therefore, the low resistance coils are made of thick, while the high ones are composed of fine, wire. If fine wire were used for the low resistance coils the length of wire necessary would be short, and, consequently, the accurate adjustment of the actual length required would be extremely fine, and, therefore,

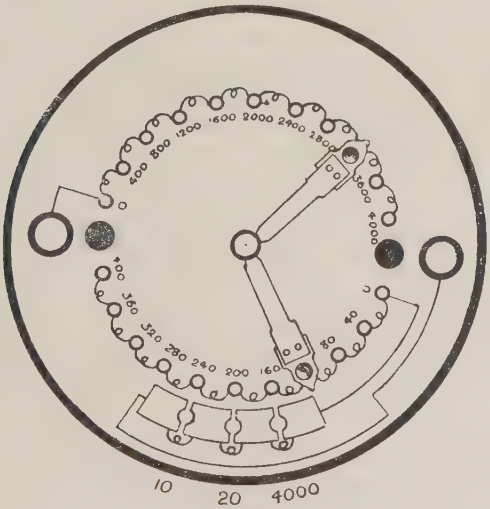

FIG. 28. CONNECTIONS OF RHEOSTAT "C"

subject to considerable inaccuracy. Usually, too, the currents flowing through low resistances are larger than those flowing through high resistances, and upon this account also, thick wire is desirable.

Rheostats. The obsolescent rheostat "C" (Fig. 28), comprises two contact arms, each of which is capable of being moved over a semicircle of contact points, and three separate resistance coils and plugs. The one set of studs is consecutively marked 0, 40, 80, 120, 160, 200, 240, 280, 320, 360, and 400, while the other half is similarly marked, but with values ten times as great, i.e. 400 to 4000. By means of the nearer arm any

resistance up to 400ω by gradations of 40ω can be inserted. With the other, any resistance from 400ω to 4000ω, by gradations of 400ω, may be obtained. Using both arms, any resistance from 0 to 4400ω by gradations of 40ω may be obtained. On the base of the instrument three coils of 10ω, 20ω, and 4000ω are

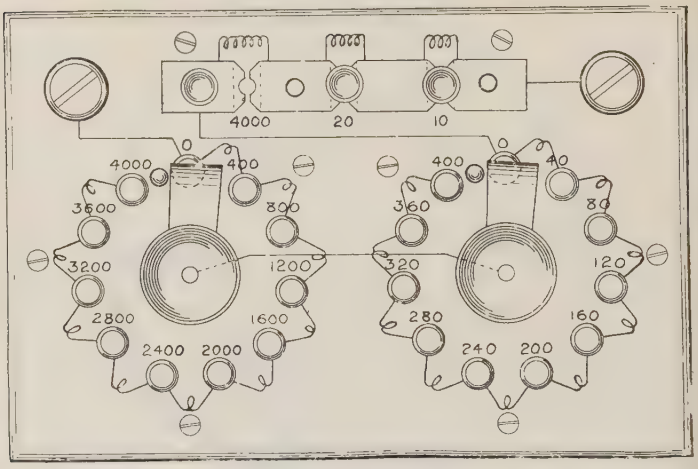

Fig. 29. Rheostat "D"

provided, thus bringing up the maximum resistance obtainable to 8430ω. The first two coils provide for gradations of 10ω instead of 40ω; for instance, 3330ω would be provided by the 400ω coil arm at 3200ω, the 40ω coil arm at 120ω, and the 10ω coil plug out; 3340ω would require the 20ω coil; 3350ω both 10ω and 20ω; whilst 3360ω would be provided by moving the 40ω coil arm to 160ω and plugging up both the base coils. The 4000ω coil is for use when the resistance required exceeds 4430ω.

The "D" form (Fig. 29) which is now the standard pattern, possesses the merits of less cost and superior efficiency of the contacts. The two radial arms each

consisting of strips of phosphor bronze, bent as shown, bear down upon the circular brass contact blocks, between which the 40^{ω} and 400^{ω} coils are connected. In addition, 10^{ω}, 20^{ω}, and 4000^{ω}, plug coils are provided, as in the " C " type.

A rheostat " F " having also 1^{ω}, 2^{ω}, 3^{ω}, and 4^{ω} is provided for use with the bridge megger.

The rheostat " K " is a rheostat " D " but with an extra 4000^{ω} coil and plug. The rheostat " J " has two dials 5^{ω} to 50^{ω} and 50^{ω} to 500^{ω} with three coils each of 250^{ω} and three plugs. It is used as the control resistance in the motor circuit of the Distributor Baudot No. 3.

Double-winding. All resistance coils are so wound as to have the smallest possible self-inductance. This is accomplished by doubling the wire and w nding it as indicated in Fig. 25. A current traversing the coil does not generate a magnetic field, and the coil has, therefore, no inductance. Moreover, magnets moved in the vicinity of the coils will not produce induced currents. In considering such instruments as Wheatstone bridges, it will be quite apparent that this method of winding is essential.

A resistance with very small inductance may be formed by winding the coil upon a thin flat strip of insulating material. In this case, the two sides of the coil are so close to each other as practically to neutralize each other's magnetic effect. This plan is very extensively adopted in telephony.

PART II.—GALVANOMETERS

An electric current can only be measured indirectly by the effects which it produces under given conditions. Its principal effects are magnetic, thermal, and chemical, and each of these effects may be employed to detect, to compare, or to measure currents.

The magnetic field round a current conveying wire is strictly proportional to the value of the current

flowing in the wire, and its direction depends upon the direction of the current producing it. If the relative values of the magnetic field at a given point produced by two successive currents in a particular conductor or series of conductors can be ascertained, then the values of the two currents producing those magnetic fields can be ascertained.

The underlying principle in all horizontal galvanometers (with the exception of the D'Arsonval types) is the comparison of the value of the magnetic field produced by a current in its coils with the earth's magnetic field.

Galvanometers may be distinguished as pointer galvanometers and reflecting galvanometers. All the instruments used in Post Office instrument rooms belong to the former class—a pointer or needle being employed to indicate the deflection. The latter class comprises all those instruments in which a mirror is fixed to the moving system to indicate the deflection by a ray of light.

Tangent Galvanometer. This instrument is no longer used in practical telegraphy. Its merit lay in the fact that its indications bear a definite and simple relation to the current flowing through its coils, viz. that the current is directly proportional to the tangent of the angle of deflection. Essentially, a tangent galvanometer consists of a circular coil of wire the diameter of which is at least ten times the length of the magnetic needle suspended or pivoted at its centre. The coil is placed in the magnetic meridian, and in order to observe the deflections a light pointer of non-magnetic material is fixed at right angles to the magnetic needle. Beneath the pointer is placed a circular scale divided into degrees reading from 0° to 90° on each side of the normal E. and W. position of the pointer. The object gained by fixing the pointer at right angles to, instead of parallel with, the magnetic needle, is that the normal position of the pointer at zero or 0°, and the centre of the scale are then outside instead of under the coil.

The magnetic needle of a tangent galvanometer lies in the magnetic meridian, i.e. it is held in a N. and S. position. The horizontal component of the earth's magnetic field and that due to the current in the coils of a tangent galvanometer are at right angles to each other. When a current is passed

through the coils of the galvanometer the direction of the resultant field is altered. If the two fields be of equal strength the resultant field lies midway between the two, i.e. 45° from the magnetic meridian and 45° from the direction of the field due to the coil considered by itself. If the deflecting field be less than the controlling field at the point considered, the resultant field is less than 45° from the magnetic meridian. If greater, then it is over 45°. A minute magnetic needle placed at the point in question would lie along the resultant field at that point, and therefore in the three cases taken,

Fig. 30. Helmholtz or Gaugain Galvanometer

deflections of 45°, less than 45° and over 45° would be indicated by the pointer.

By making the diameter of the coil ten times the length of the magnetic needle it may still be assumed that the needle indicates the direction of the resultant field at the centre of the coil, and that therefore the tangent law still holds. But were the needle a long one, its poles would move further and further from the coil as it deflects, and therefore in the case of two unequal deflections the magnetic fields would not be compared at the same point. With a small needle the magnetic field is practically uniform over the area through which the magnetic needle swings. For still greater accuracy the depth of the windings of the coil should bear to their width the ratio of $\sqrt{3} : \sqrt{2}$.

The error can be further reduced to the order of one-hundredth

of 1 per cent by adopting the form of galvanometer devised by Helmholtz (Fig. 30) and referred to variously as the Helmholtz or Gaugain galvanometer. Two equal and parallel coils are employed with the needle lying midway between them in the line joining their centres. The distance from the centre of either coil to the needle is made equal to half the radius of either coil.*

In short, the deflecting force, which is strictly proportional to the current, is at right angles to the controlling force (the horizontal component of the earth's magnetic field), normally holding the needle in the magnetic meridian, and the current producing a deflection is proportional to the tangent of the

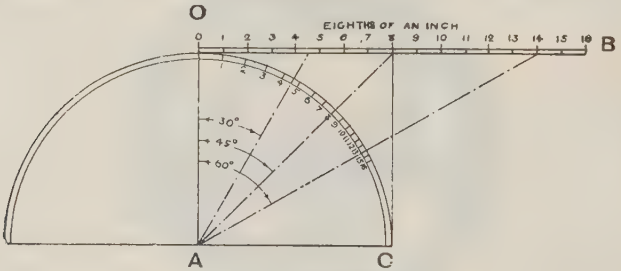

Fig. 31. Division of Galvanometer Scale into Tangent Divisions, and Illustrating the Values of tan 0°, tan 30°, tan 45°, tan 60°

angle of deflection. If therefore a current of 10 mA produces a deflection of 38°, the current producing a deflection of 65° would be found thus:

$$\tan 38^\circ : \tan 65^\circ :: 10 : x$$
$$\text{i.e. } \cdot 7813 : 2 \cdot 1445 :: 10 : x$$
$$\therefore x = \frac{2 \cdot 1445 \times 10}{\cdot 7813} = 27 \cdot 45 \text{ mA.}$$

The values of tan 38° and tan 65° are obtained from a table of tangents.

Tangent of an Angle. In order to ascertain the value of the tangent of any particular angle, that angle should be marked off from AO along the quarter circle OC (Fig. 31). A line is then drawn connecting A and OB through the point upon the quarter-circle. The tangent of the angle is equal to

* The relation given on page 110 for an ordinary galvanometer $[C = \frac{Hr}{2\pi n} \tan a]$ becomes for the Helmholtz instrument $C = \frac{5\sqrt{5}\,Hr}{32\pi n} \tan a$ where H, r, and n have the same meanings as before.

the length from *O* to the point of intersection along *OB*, divided by the length of the radius of the circle. This number has only one value for any given angle, but it will be obvious that the larger the circle the greater is the accuracy with which the measurements may be obtained. In Fig. 31 the radius of the circle is 1 in., and the divisions are each one-eighth of an inch, therefore the tangent of any angle drawn from *AO* is equal to the length in inches of the line from *O* to the point of intersection. The tangent of 0° is 0, since the length along *OB* for angle of 0° is 0. The tangent of 45° is seen to be eight one-eighths of 1 in., i.e. 1 in. Its tangent is therefore 1. In the case of 30° it will be seen that the intersection occurs just after $\frac{4}{8}$ in., and making a guess at the point one would say it was about half-way between $\frac{4}{8}$ and $\frac{5}{8}$, i.e. $\frac{4}{8} + \frac{1}{16} = \frac{9}{16}$ in. According to this guess its tangent is then $\frac{9}{16}$ or ·56 approximately. Its actual value is $1/\sqrt{3}$ or ·57735. The tangent of 60° is by the same rough and ready process found to be $1\frac{4}{5}$ or 1·75. Its actual value is $\sqrt{3}$ or 1·73205. It will be noticed that tan 60° is exactly three times as large as tan 30°, a fact which may readily be verified by using a pair of dividers upon Fig. 31. From *O* to 14 along *OB* is exactly three times the distance from *O* to the point at which the line setting off 30° cuts *OB*. The tangent of 90° is infinity since the lines *AC* and *OB*, being parallel, never meet. *AO* is of finite length and *OB* infinite.

Having defined the actual values of the tangents of the various angles it is an easy matter to show the relative values of the divisions. For the purpose of simplifying the previous calculations the divisions bore a simple and direct relation to the radius of the circle, but this is by no means essential. The length of a division upon the line *OB* may be of any chosen value so long as all the divisions are of equal length.

The tangents of the angles of deflection are the particular lengths marked off along *OB*, divided in each case by the radius of the circle. The radius of the circle is the same in each case, therefore the tangents of the angles of deflection are directly proportional to the lengths marked off from *O* along *OB*. These lengths are, however, divided into equal divisions, consequently the divisions marked off along *OB* are proportional to the tangents of the angles. Therefore the current producing any deflection on a tangent galvanometer is directly proportional to the number of divisions on the circle indicated by the needle or pointer.

Tangent Scale. The construction of a tangent scale therefore consists (1) in drawing a straight line at right angles to the line joining the centre of the circle and zero of the scale,

(2) in dividing it into equal divisions of any convenient length, and (3) in marking and numbering consecutively the points at which lines drawn from each division intersect the circle of the scale. In this way, repeated reference to a table of tangents is avoided, since the current is then directly proportional to the number of divisions indicated by the pointer.

Theory of Tangent Galvanometer. The deflecting force is the magnetic field due to the current in the coils, while the controlling force which tends to hold the needle in the magnetic meridian is the earth's field. These forces are at right angles to each other, and, when the needle comes to rest under their combined action—

Deflecting force (F) = controlling force (H) $\times$ tan a where tan a is the tangent of the angle of deflection.

By definition, unit current flows in an arc of 1 cm. length and radius when the magnetic field generated at its centre is 1 gauss (1 line per sq. cm.). The magnetic field F at the centre of a coil of r cm. radius with n turns of wire is—

$$F = \frac{\text{length of wire}}{(\text{distance of wire from centre})^2} = \frac{2\pi rn}{r^2} = \frac{2\pi n}{r}$$

with a current of C units $F = \dfrac{2\pi nC}{r}$

When the needle comes to rest $F = H \tan a$, where a is the angle of deflection from the magnetic meridian.

$$F = \frac{2\pi nC}{r} = H \tan a$$

$$\therefore C = \frac{Hr}{2\pi n} \tan a$$

Absolute Measurement. The value of H can readily be determined* from the rate of swing of a magnet in the horizontal field, and from its dimensions and the deflection produced on a magnetometer and its distance therefrom.

Having determined H, and knowing "n" and "r" the value of the current producing a deflection a can be calculated. Such a measurement is termed an absolute determination, since it has been made independently of existing electrical standards or units. A galvanometer used in this way is termed an absolute galvanometer.

It should be added that in all absolute determinations the

* Stewart and Gee's *Practical Physics*, Vol. II, Chap. II and Chap. VI, or Gray's *Absolute Measurements in Electricity and Magnetism*, Chap. II.

value of the current is in C.G.S. units which require to be divided by ten to give the current in amperes.

As an example, the current producing a deflection of 45° (tan 45° = 1) on a Post Office tangent galvanometer (with the coil in the magnetic meridian and not from the skew scale zero) and taking H as ·18 would be—

$$C = \frac{\cdot 18 \times (6\cdot 0 \times 2\cdot 54)}{2 \times 3\cdot 1416 \times 1400} \times 1 \quad \begin{matrix} = \cdot 000361 \text{ units} \\ = 3\cdot 61 \text{ mA.} \end{matrix}$$

Controlling Magnet. The object of the controlling magnet is to vary the sensitiveness of the instrument. The value of any current indicated by the galvanometer depends directly upon the value of the horizontal component of the earth's magnetic field. If this value is large, then a correspondingly large current is required to produce a given deflection. If the controlling magnet is placed with its north pole facing the north pole of the needle the value of the earth's field is reduced, whilst if it has its south pole opposite the north pole of the needle, the value of the earth's field is correspondingly increased. It will be obvious that the sensitiveness of the instrument is reduced if the controlling magnet is so placed as to attract the needle backwards, from the deflection produced, towards zero. If, on the other hand, there is repulsion, then the sensitiveness is increased. The extent to which the sensitiveness is increased or reduced is dependent upon the proximity of the controlling magnet to the needle. The nearer they approach the greater is the effect produced.

The controlling magnet should always be placed parallel to the needle (i.e. it should lie in the magnetic meridian). Unless this condition is observed, the needle of the galvanometer may not point to the zero of the scale. In practice the controlling magnet is invariably used to increase the sensitiveness of the galvanometer ; its north pole, therefore, faces the magnetic north.

Galvanometer Constant. The deflection obtained on a tangent galvanometer depends upon the value of

the controlling force, and this is subject to variation by the presence of local masses of iron such as girders, hot-water pipes, etc. Its value can only be assumed to be constant for a particular place during a particular set of measurements. The absolute determination of current is a difficult process, involving great care, knowledge, and experimental skill, and it is, therefore, unsuited for everyday purposes. It has been shown that currents can be compared with the aid of a tangent galvanometer, but to give the value of a current in milliamperes involves the use of a known current.

With tangent galvanometers, a current of one or two milliamperes is required to produce a reasonably large deflection, and this may be obtained by the use of a standard Daniell cell made up with chemically pure materials—the small and very accurate Clark cell being quite valueless when so large a current is required.

Knowing the total resistance of the circuit in which the cell and galvanometer are included, the current flowing is also known and thus the value corresponding to any given deflection can be given in milliamperes. This process is known as taking the constant of the galvanometer. The constant may be defined as the number by which the deflection must be multiplied to give the current in milliamperes.

For example, let the resistance of the galvanometer be 500ω, the internal resistance of the standard Daniell cell be 4ω, and the deflection produced 100 tangent divisions.

$$\text{Current} = \frac{1{\cdot}08}{500 + 4} = 2 \text{ mA approx.}$$

then 1 division = ·02 mA.

Hence, the value of any other deflection produced is readily obtained assuming that the position of the instrument and that of the controlling magnet are unchanged.

Paul's Unipivot Instruments. The advantages of an instrument which is independent of the value of

the earth's magnetic field, and which does not require the adjustment of its constant upon each occasion on which it is used, will be apparent. This result may be accomplished by providing a constant magnetic field together with a suitable spring to provide the controlling force to oppose the turning force of a movable coil placed within the field. Paul's unipivot galvanometer (Fig. 32) consists of a large permanent magnet between the poles of which there swings a coil of insulated copper wire wound upon a light copper frame. The magnetic field across the coil is rendered uniform by placing a spherical wrought iron armature between the poles, so shaped as to maintain a perfectly uniform air gap in which the coil moves. The coil (Fig. 33) is carried on a single pivot resting on a jewel cup at the centre of the armature.

The direction of the magnetic field generated by the current is at right angles to the plane of the coil, and the tendency is, therefore, for the coil to turn into such a position that its lines of force are in the same direction as the permanent magnetic field. This turning force is opposed by the torsion which is put upon the spring when the coil turns, the torsion thus provides the controlling force. The magnet is subjected to a series of processes which have the effect of "ageing" it and thus rendering it practically constant. The magnetic field being uniform throughout the area through which the coil moves, and the opposition of the spring being proportional to the angle through which the coil is turned, it will be recognized that the current will be directly proportional to the angular deflection of the coil. The scale will, therefore, be a uniform one with equal divisions representing equal currents. By suitable design the constant of the instrument may be given a particular value, and, in the case of all the Paul instruments, the value is $\frac{1}{100}$ mA per division.

The instrument may, when necessary, be set to zero by means of the small projecting lever to which the

torsion spring is attached. A further device has been added by which the coil may be raised and clamped for transport.

The function of the light copper frame upon which the coil is wound is to damp the vibration of the coil, and thus to render the instrument dead-beat. The

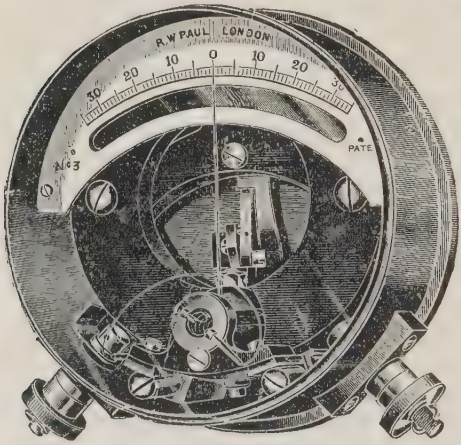

Fig. 32. Paul's Unipivot Galvanometer

Fig. 33. Unipivot Coil and Core

motion of the copper frame across the intense field of the permanent magnet causes a current to be induced in the frame. This current circulating round the frame produces a magnetic field which combines with the permanent field to oppose the motion of the frame, to which motion the induced current is due. Since the value of the current depends upon the rapidity of the motion of the coil, a very considerable opposition to sudden motion is experienced. In this way the time taken for the needle to come to rest after being deflected is reduced, and the needle comes to rest with few oscillations, and, therefore, a large number of readings may be taken in a given time.

Consideration will show that instruments of this type may have their scales marked in milliamperes and be

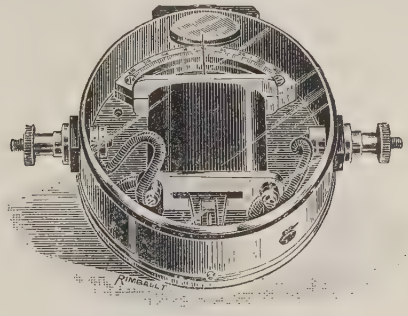

FIG. 34. HORIZONTAL GALVANOMETER USED IN CONJUNCTION WITH THE WHEATSTONE BRIDGE

FIG. 35. DETECTOR NO. 2

employed for the measurement of currents. Such an instrument is then termed a milliampere meter.

Horizontal Galvanometer. This instrument (Fig. 34) consists of a coil of wire with a very large number

of turns and having a comparatively long magnetic needle pivoted at its centre. The pointer is fixed at right angles to the needle, and a corresponding counterpoise provided upon the opposite side of the needle. The whole of the moving parts can be raised and

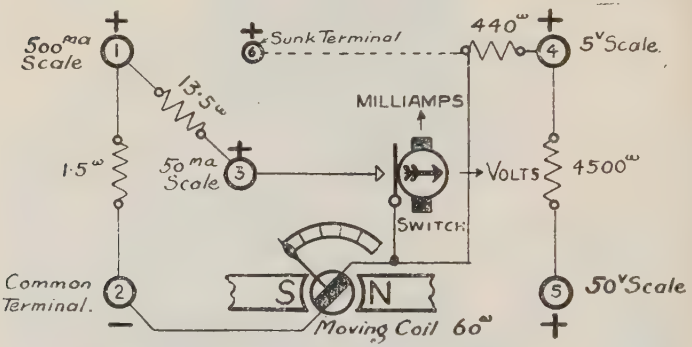

Fig. 36. Connections of Detector No. 2

clamped at will by moving the projection outside the brass case, thus avoiding damage during transport.

It can be used only to detect the presence and direction of a current, since, unlike the Paul instrument, its scale degrees are not proportional to the current, nor owing to its dimensions does it obey the tangent law.

Detector No. 2.* This instrument is a moving coil voltmeter and milliampere meter of robust construction contained in an aluminium case, and provided with a leather case so arranged that the instrument may be used without withdrawal. It will be observed that the coil is placed at an angle to instead of in the line joining the soft iron pole pieces. This gives extended range of measurement. The moving coil has a resistance of 60ω, and unshunted gives a full scale reading with 10 mA and with the $\frac{1}{50}$ and $\frac{1}{5}$ shunts with

* *P.O. Electrical Engineers' Journal*, Vol. III, p. 234, and Vol. IV, p. 278.

which it is fitted 500 mA or 50 mA. Its use as a voltmeter reading 0 to 5^{v} and 0 to 50^{v} will be apparent after a consideration of the subsequent chapter.

Detector No. 4.* This instrument (Fig. 37) is a refinement on the detector No. 2, but is of equally

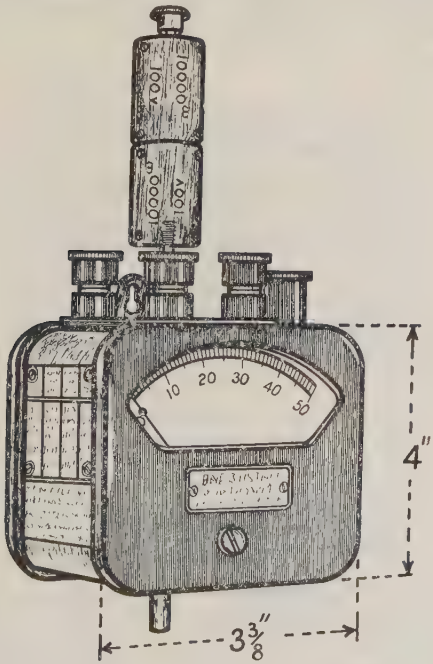

FIG. 37. DETECTOR NO. 4 WITH BOTH MULTIPLIERS ON TERMINAL 3

robust construction. The moving coil circuit has a resistance of 10$^{\omega}$ only (moving coil 3$^{\omega}$, phosphor bronze hair springs control 1·3$^{\omega}$, eureka fuse ·7$^{\omega}$, and a series manganin resistance of 5$^{\omega}$). The temperature variation of the resistance of this circuit amounts to only ·13 per

* "Detector No. 4," by Captain H. Yorke Starkey, *P.O.E.E. Journal*, Vol. 20, p. 97.

cent as compared with ·427 per cent per degree centigrade for a circuit made up wholly of copper wire. In

Fig. 38. Shunts

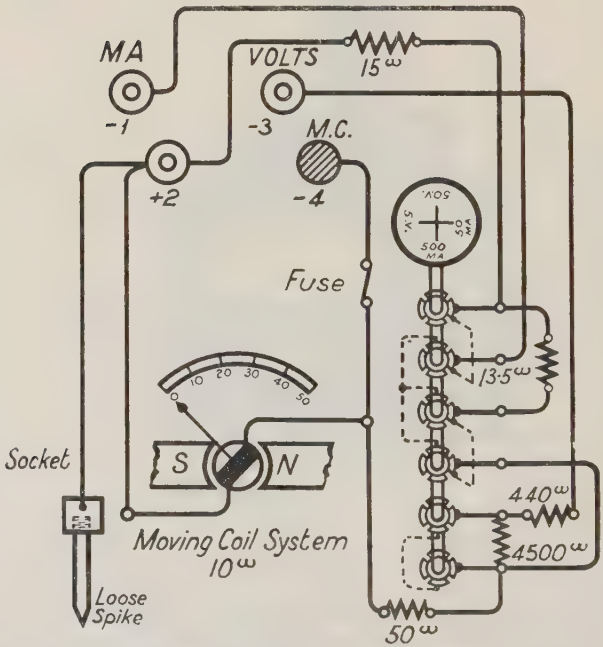

Fig. 39. Internal Connections of Detector No. 4

addition to the two internal shunts and two internal multiplying resistances, two separate shunts (5 amp. and 25 amp.) (Fig. 38) and two 10,000ω multiplying resistances are provided. The latter may be screwed together

in series, and the threads of terminals Nos. 2 and 3 are elongated to accommodate one or both according to the range required.

A full scale deflection is given with 10 mA, and the ranges of the instrument are as shown in the table on page 120.

The switch is novel in that the " clicks " are between the " on " positions, thereby ensuring good rubbing

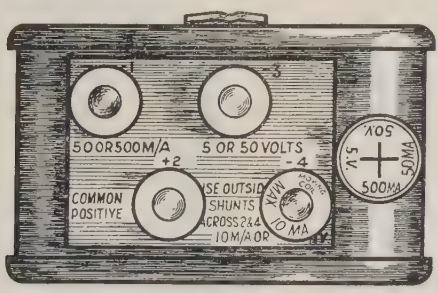

Fig. 40. Plan of Top of Detector No. 4 Showing Terminals

contacts during use. The zero of the pointer is adjustable by the screw provided, and a spike is added for secondary cell voltage or other similar tests.

Galvanometers with Induced Needles. Small permanent magnet needles are subject to demagnetization by the continual passage of working currents through the coils. In order to avoid this defect the needles of all galvanometers used on telegraph circuits are of soft iron rendered magnetic by induction from a pair of comparatively large permanent magnets. There are two types of such galvanometers in general use, viz. those having Varley and Spagnoletti coils.

In the Varley form, the needle is a fork-shaped piece of soft iron rendered magnetic by induction from a pair of comparatively large bar magnets fixed one upon each coil (Fig. 43). The magnetic needle is fixed upon an axle which also carries the pointer, and is suspended

Range	Terminals	Value per Division	Resistance in ohms	Shunt and Resistances in use
Current				
0–10 mA	2 and 4	·2 mA	10	Direct on moving coil
0–50 mA	2 and 1	1·0 mA	12	Internal shunt
0–500 mA	2 and 1	10 mA	1·47	Internal shunt
0–5 amp.	2 and 4	100 mA	·0199	External shunt
0–25 amp.	2 and 4	500 mA	·004006	External shunt
Volts				
0–·1v	2 and 4	·002v	10	Direct on moving coil
0–5v	2 and 3	·1v	500	Internal resistance
0–50v	2 and 3	1v	5000	Internal resistance
0–150v	2 and 3	3v	15,000	External resistance
0–250v	2 and 4	5v	25,000	External resistance

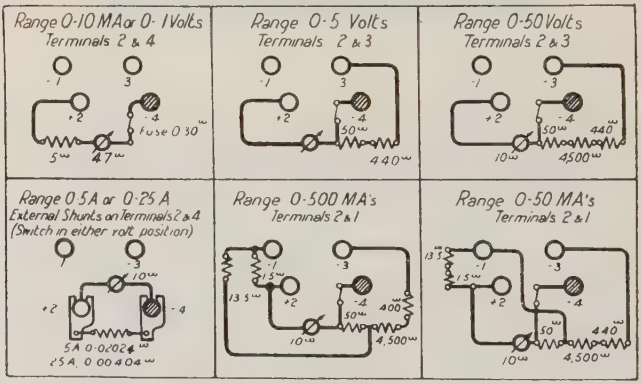

Fig. 41. Connections Between Terminals for Various Positions of Switch

well below the centre of the coils. As the direction of the magnetic field due to the earth (vertical component) is such as to make the upper end of the soft iron needle south, and the lower end north, the permanent bar magnets are arranged so as to reinforce, instead

of to oppose, this effect. The upper, or free ends of the needle are, therefore, of south and the lower end north polarity. The passage of a current through the coils creates a magnetic field through the centre spaces, and the needle deflects in accordance with the principles previously explained. In this case, however, the deflection of the needle is opposed by the earth's

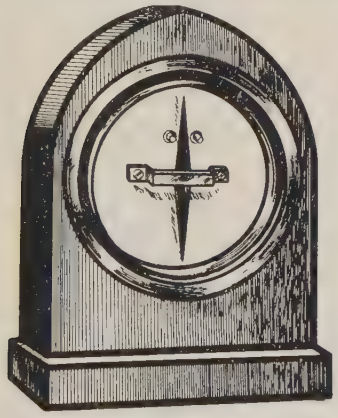

Fig. 42. Single Coil Galvanometer (Resistance 30ω)

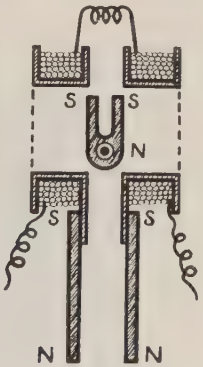

Fig. 43. Varley Induced Needle and Coils

vertical field (which is larger than its horizontal field), but is assisted somewhat by gravity.

The Spagnoletti type (Figs. 44 and 45) comprises two coils side by side at the centre of which the induced needle swings. This needle is in two sections, separated magnetically by a layer of spelter which serves to braze them together. The two magnets, each of which passes over the coil from front to back, have their like poles opposite. The soft iron axle extends downwards to form the lower half of the needle, which is given north polarity by induction of the two north poles of the horse-shoe magnets upon the front part of the axle. In similar manner the upper end of the needle is made

south. The two rectangular coils enclose the needle and are fixed as indicated in Figs. 44 and 45. The curious dumb-bell shape of the needle is claimed to produce an extended range of measurement and greater sensitivity.

The coils of all Post Office galvanometers are connected to the terminals in such a direction that the

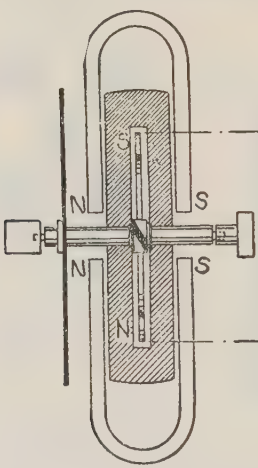

FIG. 44. SIDE VIEW OF SPAGNOLETTI'S COILS

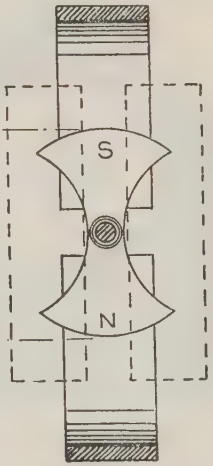

FIG. 45. ILLUSTRATES THE SHAPE OF THE NEEDLE IN SPAGNOLETTI'S COILS

top of the pointer deflects in the direction in which the current passes through the instrument. For example, if the current passes from the right to the left-hand terminal, the top of the pointer moves over to the left.

Galvanometer 22A. This was formerly termed a "single coil galvanometer," and was in its earlier forms fitted with ivory stop pins to limit the swing of the needle. The coils are either of the Varley or Spagnoletti type, and are wound to a resistance of 30^{ω}. The needle should normally be vertical when facing

either north or south, and should deflect to either stop pin with a current of 9·3 mA.

In the later patterns the stop pins are omitted ; the dial is fully engraved as in Fig. 47. In addition a 1000$^{\omega}$ non-inductive shunt is placed across the coils to reduce the inductance of the instrument. The coils are joined to two cheese-headed contact screws at the back of the wooden case.

The 22A galvanometer is used on simplex sounder and central battery circuits.

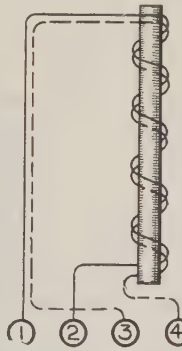

FIG. 46. DIFFERENTIAL WINDING

Differential Winding. A galvanometer is said to be differentially wound when it has two coils equal in resistance, length, and position with respect to the needle. A current of any given value would therefore produce the same deflection by passing through either coil. When the current traverses both coils in sequence the deflection is doubled, whereas no deflection will result if the current passes through the two coils in such a direction that their effects oppose each other. The principle may be best illustrated by the two coils wound upon a rod of iron illustrated in Fig. 46. A current flowing from 1 to 2 tends to make the top a north pole, as does a current from 3 to 4. A battery connected between terminals 1 and 3 with 2 and 4 joined together would produce no magnetic effect, since the coils carry equal current and have equal and opposite effects. It is quite impossible for two magnetic fields of opposite direction simultaneously to exist in one place, hence, no magnetic field whatever is generated by the arrangement described. If now terminals 1 and 4 be joined and terminals 2 and 3 connected, a battery applied to the two sets of joined terminals will similarly produce no effect upon the core. The two coils being equal in

resistance divide the current equally between them and their effects oppose.

The two tests described serve to *prove* whether a relay or galvanometer is differential. It will be obvious that by placing a rheostat in circuit with one coil of the galvanometer the resistance of a circuit connected in series with the other or opposing winding may be measured by adjusting the resistance in the rheostat until the needle stands at zero.

It may be added that the resistance of a differentially wound instrument with its coils in series is four times as much as with its coils in parallel ; the figure of merit in parallel is equal to that of one coil or twice that of the two coils in series ; the inductance of the coils in series is four times that in parallel, excepting when the coils carry equal current which oppose each other and, consequently, their inductance is then negligible.

An instrument is differentially wound when it has two windings of equal resistance and equal but opposite effect upon the cores when the same value of current circulates in each coil in contrary direction.

Galvanometer 1a. The 1A type was formerly known as the " differential galvanometer." Its coils may be of either the Varley or Spagnoletti type, generally the former. The coils are differentially wound (*q.v.* page 123) to a resistance of 50^{ω}, and each is shunted with a 300^{ω} resistance bobbin. The object of this shunt is to reduce the inductance of the instrument when used on circuits worked at high speed. The effect of the shunt is to reduce the total resistance of each coil to approximately 43^{ω} ($42{\cdot}9^{\omega}$ nearly).

The needle should rest at zero when facing either north or south, and should return to zero after deflection. A current of 17·5 mA through either of the shunted coils should produce a deflection of not less than 40 degrees nor more than 50 degrees. The coils should be differential with the needle in any position between 30 degrees right and left of zero with 100 mA

when the coils are joined in series so as to oppose each other, and with 200 mA when the coils are joined in parallel in opposition.

As a rough guide when estimating currents on working circuits it may be assumed that up to 30° the current is approximately proportional to the deflections produced. Using one coil only, or both in parallel, the

Fig. 47. Differential Galvanometer (No. 1A)

value of 1° is $\frac{2}{5}$ mA, which gives 20° = 8 mA and 30° = 12 mA (actually, 11 mA). Beyond this point the current required to produce a given deflection is much larger than ·4 mA per degree. For instance, 50° corresponds to 25 mA and 60° to 40 mA. When the deflections are produced by the coils in series the currents are, of course, one-half the values given above.

The 1A galvanometer is used on all duplex circuits, high speed, machine telegraphs, and for test box localization tests. Its four terminals are at the back, and are spaced as indicated in conventional fashion in Fig. 46.

Moving Coil Circuit Galvanometers. Recently, Elliott Bros. have produced a differential moving coil galvanometer with an equa division current scale reading directly up to 100 mA on either s de of zero. The Automatic Telephone Manufacturing Co. have also incorporated a similar instrument reading to 30 mA on either side of zero in their new Universal Duplex Unit. The advantages of such an instrument as compared with the induced needle type are manifest.

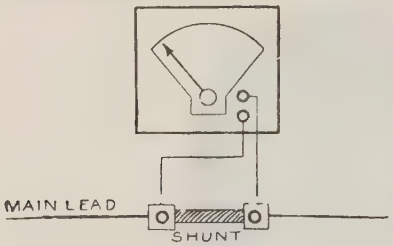

FIG. 48. AMMETER

Ammeters. To measure larger currents such as those used in charging secondary cells, instruments reading in amperes are employed. Many of these are of the moving coil type, the main current being diverted through a shunt. The arrangement is illustrated in Fig. 48. The resistance employed as the shunt is low and is capable of carrying heavy currents. With a Weston instrument reading from 0 to 50 amperes, the resistance of the shunt is about $\cdot 00435^{\omega}$. The arrangement may be regarded as consisting of a voltmeter (the actual instrument) which indicates the difference of potential across the shunt, which in turn depends upon the current flowing through the shunt.

It may be added that by placing a shunt in each of several circuits, the current can, with the aid of a simple form of multiple-way switch, be measured in those several circuits at will by a single indicating instrument. The leads connecting the shunts with the instrument must not be shortened, any slack being neatly coiled up, since the instrument is calibrated with the resistance of these leads in circuit.

A recording ammeter is an ammeter the index of

which is provided with a pen, and by a suitable clock causing a paper chart, carried on a drum making one revolution per 24 hours, to move beneath the pen. A permanent and continuous record of the current passing through the instrument is made on the chart which is divided up into hours along its length, and into amperes across its width.

Moving Iron and Hot Wire Ammeters. There are three main types of ammeter, of which only the moving coil type has so far been considered, and it may, therefore, be useful to describe briefly the principles involved. The other types are those in which the motion of an iron armature is employed, and those in which the heating of a wire by the passage of the current is utilized.

If a solenoid be provided with an iron core attached to a fixed spring balance so disposed that a current through the coil draws down the plunger, the scale of the balance could be marked with the value of the current corresponding to the weight pulled. This is the arrangement and principle of the Kohlrausch ammeter. In the Westinghouse type the motion of the armature towards the edge of the coil is opposed by gravity. In several other types a similar principle is employed, viz. the tendency of the iron to move from a comparatively weak to a stronger magnetic field, which is opposed by the weight of the moving system.*

In hot wire instruments a proportion of the main current is passed through a wire which becomes hot and increases in length under the action of the current. This extension in length is employed to move the pointer.

Reflecting Galvanometers. The original galvanometer of the reflecting type was invented by Lord Kelvin, and consists of a circular coil of wire, in the centre of which is fixed a removable copper tube carrying

* For descriptions of various patterns see Maycock's *Electric Light and Power Distribution,* Vol. I, p. 374.

a small circular mirror suspended from its centre by an extremely short length of silk. Upon the back of the mirror two or three short pieces of magnetized steel are fastened. The coil is placed in the magnetic meridian, and opposite it a lamp and scale for observing the deflection.

A beam of light is directed by a lens on to the mirror, which, in its normal position reflects a circular beam

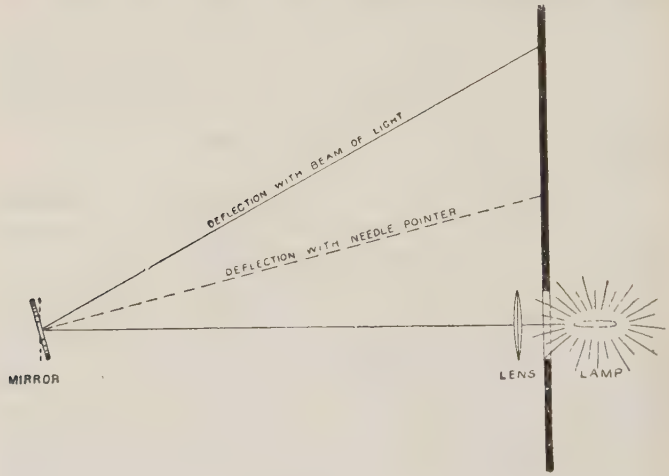

Fig. 49. Principle of Reflecting Galvanometer

of light on to the scale. When the mirror is deflected by the smallest amount the spot of light moves along the scale. This is roughly illustrated in Fig. 49, where it will be observed that a very small angular deflection of the mirror has produced a large alteration in the position of the spot of light upon the scale. The beam of light is practically a pointer of indefinite length, and by increasing the distance from the mirror to the scale the sensitiveness of the arrangement may be greatly enhanced. The usual distance employed is a metre, i.e. rather more than a yard. If the scale divisions are

equal, the conditions shown in Fig. 31 are fulfilled, and the current may, therefore, be assumed to be proportional to the number of divisions passed over by the spot of light. If the angular deflection is extremely small the tangent law may be assumed to apply, the corrections necessary when the dimensions differ widely from those laid down for an ordinary tangent galvanometer being extremely minute.

Since the angle at which the light strikes the mirror is equal to the angle at which it is reflected, the value of the deflection is doubled. This introduces a very small correction, which for most practical purposes is ignored. The actual error which is made is the assumption that half the tangent of the angle between the beam of light and its reflection is equal to the tangent of half the angle of deflection. In an absolute determination the error amounts to rather less than $\frac{1}{3}$ of one per cent for a 3° deflection of the mirror. In a comparative test the error would be far less.

Damping. In the earlier forms of reflecting galvanometer the time taken for the needle to come to rest after being deflected was considerable, so that, in any given time, a comparatively small number of measurements could be made. This defect has been remedied in the more modern forms of instrument by various devices. The copper tube mentioned in the description of the original galvanometer was provided for the purpose of damping these vibrations, but it was only partially successful. The magnetic needles upon the back of the mirror carry with them a small magnetic field which is united with that of the earth. When the needle is deflected, its magnetic field cuts through the copper tube, and eddy currents, which oppose the rapid motion of the mirror, are generated in the tube.

The opposition offered by the air contained in the restricted space of the copper tube to the rapid motion of the mirror through it also adds its damping effect. In one type of galvanometer the mirror is placed in oil.

A galvanometer in which the damping is very great is termed "*dead-beat.*"

A lamp and scale are illustrated in Fig. 50. It may be remarked that the circular spot of light thrown upon the scale is crossed by a fine vertical line. This vertical line is produced by a scratch, or a fine wire upon the lens. Its object is to render the reading of the deflection

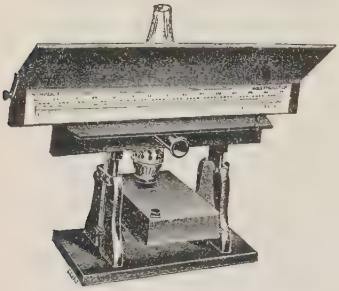

Fig. 50. Lamp and Scale for Use with Reflecting Galvanometers

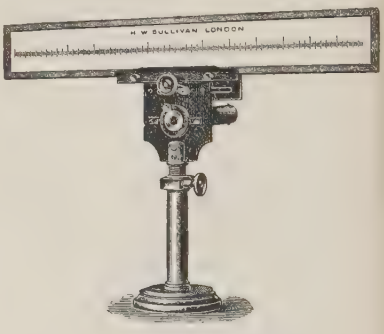

Fig. 51. Sullivan Semi-transparent Scale

easier and, consequently, more accurate. The dark line down the centre of the spot of light is adjusted by means of the controlling magnet to fall upon the zero of the scale, and the value of any deflection is read as the number of the division upon which the line falls. The flame of the lamp should present its edge to the lens and not its breadth.

The semi-transparent scale (Fig. 51) is used by the Post Office for precision testing. The light from a small incandescent electric lamp lighted by a portable secondary battery is focused on to the mirror via lenses, and the movement of the spot is observable from either side of the scale. In other arrangements the reflection of the scale on the mirror is read by a small telescope, but this type is employed only in exceptional circumstances.

Kelvin (or Moving Magnet) Reflecting Galvanometers. One of the numerous forms given to this instrument is shown in Fig. 52 with the moving system drawn to an enlarged scale at the side (Fig. 53).* An aluminium wire, *AW*, carries the two compound needles, *SN*, *NS* (which are arranged to form an astatic combination), the vane *V* of aluminium foil, and the

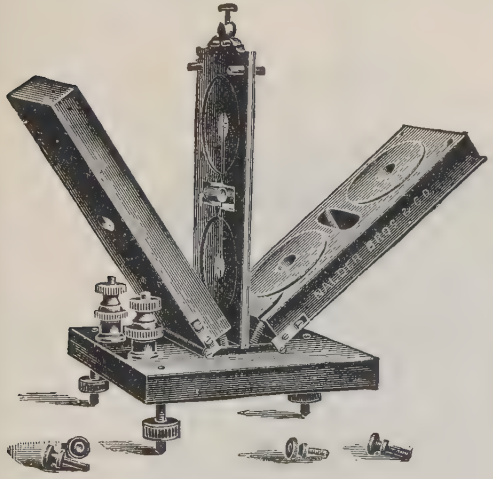

Fig. 52. Simple Form of Kelvin Galvanometer

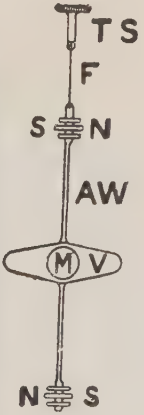

Fig. 53. Needles and Mirror

mirror *M*. This constitutes the moving system, and is suspended from the screw *TS* by a very fine fibre *F* of cocoon silk. The four coils are mounted on two-hinged frames to facilitate adjustment, or inspection of the needles. The four coils are connected in series, but the direction of the current in the lower pair of coils is opposite to that in the upper coils, so that they combine to deflect the needles in the same direction.

The vane *V* moves in a small and almost enclosed chamber, thus damping or retarding the oscillations of

* Taken from W. Perren Maycock's *Electric Light and Power Distribution*, Vol. I, p. 299.

the needles. Careful levelling is necessary to ensure that the needles and vane may hang quite clear.

Frequently the coils are wound differentially, the final adjustment being made by a small sliding coil which can be moved towards or away from one of the needles.

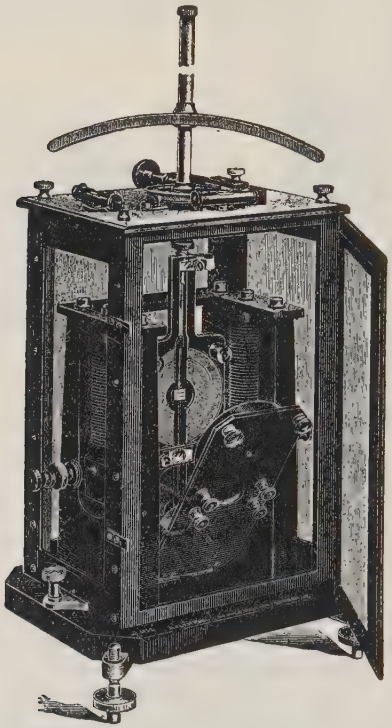

Fig. 54. High-grade Kelvin Galvanometer

A high-grade instrument with a long suspension and controlling magnet and wound to a resistance of 100,000ω is shown in Fig. 54. Special precautions have been taken to secure very high insulation, but otherwise it differs little from the instrument previously described.

Astatic Needles and Systems. An astatic combination of needles may be employed in many types of galvanometer for the purpose of increasing the sensitiveness. In its simplest form it consists of two needles of equal length and equal pole strength, but with opposite poles facing each other, rigidly connected together.

The arrangement shown in Fig. 55 constitutes an astatic combination, but frequently the number of

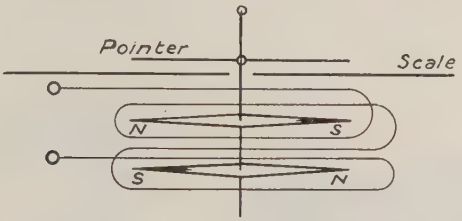

Fig. 55. Astatic Pair of Needles

needles exceeds two. The qualification for a system or arrangement of needles to be considered astatic is that the earth's directive control shall have been reduced to a minimum. With the aid of the controlling magnet it is possible to reduce it to zero, and the torsion on the cocoon fibre then becomes the controlling force, but this condition gives the needles too unstable a zero for practical use. The ballistic galvanometer illustrated in Fig. 58 has four needles arranged to form an astatic combination.

D'Arsonval (or Moving Coil) Reflecting Galvanometers. In this type, the pointer is replaced by a mirror attached to the top of the moving coil. The controlling force is the torsion on the suspending wires, which serve also to convey the current to and from the coil. The Sullivan galvanometer (Fig. 56) is used by the Post Office as part of the precision testing outfit. The moving coil is wound on a light silver frame to damp vibration, and moves in the gaps between the poles of the circular magnet and the soft-iron armature

supported on the suspension frame. A camel hair brush can be brought into contact with the suspension so as further to increase the damping. Levelling screws and level gauges are added for setting up the instrument on a large block of paraffin wax which is used to secure high insulation. The presence of the universal shunt (*q.v.*) across the terminals of the galvanometer is

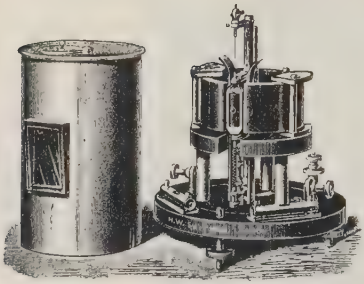

FIG. 56. SULLIVAN GALVANOMETER

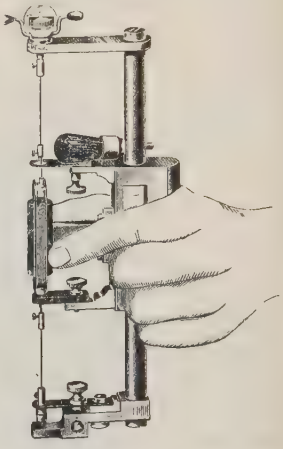

FIG. 57. MOVING SYSTEM

also effective in adding to the dead-beat quality of the instrument since E.M.F.'s generated in the moving coil itself produce a current through the shunt which is wound to 2000^{ω}. This galvanometer has a figure of merit of about ·005 to ·007 micro ampere per 1 m.m. of scale deflection when the scale is 1 metre from the mirror.

Moving coil galvanometers are, in general, dead-beat, but, perhaps their greatest advantage lies in the fact that owing to the large value of the permanent magnetic field, they are practically unaffected by external magnetic fields. They are not, however, so sensitive as the highest types of Kelvin galvanometer.

There are many forms of this type of instrument, as,

for example, the robust Paul single-pivot galvanometer, with its spiral spring control, thus dispensing with the somewhat fragile suspension wires. In the Ayrton Mather instrument* the coil is made very narrow, and the soft-iron armature is dispensed with. The coil is enclosed in a silver tube to secure damping. In the Crompton galvanometer† the coil is hung on two suspending wires placed side by side and close together. At the upper end the distance between the ligaments may be varied to increase or reduce the sensitivity as required.

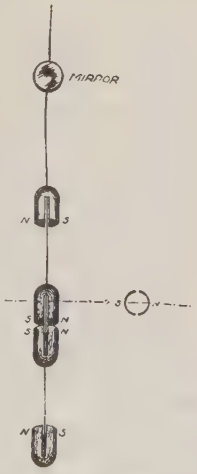

FIG. 58. NEEDLES AND MIRROR OF BALLISTIC GALVANOMETER

Ballistic Galvanometer. The ballistic galvanometer differs from other types of galvanometer in the kind of needle employed. It is used for measuring the quantities of electricity discharged by condensers or electro-magnets, and not usually for measuring currents. It might therefore be more correctly termed a coulomb-meter. The needles are heavy and cylindrical, the object being to secure a weighty moving part and at the same time to reduce the friction caused by its movement as much as possible. With this object in view, the suspending silk is often made of considerable length. To give a correct indication it is essential that the whole of the discharge to be measured shall have passed through the instrument before the needle has sensibly moved from its position of rest. The quantity of electricity discharged through it is then proportional to the value of the swing produced. The period of time taken for the needle to swing from side to side is made as large as possible, and in this respect it is diametrically opposite to a dead-beat galvanometer.

The needles are cylindrical so as to minimize air friction during movement and also form an astatic combination. The central pair of needles (Fig. 58), which are at the centre of the coil, consist of two split tubes with hemispherical ends.

* *Outlines of Electrical Engineering*, by Simmons, p. 254.
† *Ibid.*

The upper and lower needles are just outside the periphery of the coil.

Some galvanometers of the D'Arsonval type are used as ballistic galvanometers by replacing the light conducting frame upon which the coil is wound by an extra winding which can be short-circuited to damp the instrument, or which can be disconnected at will when the latter is required for ballistic tests. In the Ayrton Mather instruments the silver tube may, with this object, be replaced by an ivory one.

Figures of Merit. The figure of merit of a galvanometer is the value of the current required to produce a deflection of one division, or one degree, as the case may be. The smaller the figure of merit, the smaller is the minimum value of the current which the instrument will indicate. Another method of comparing the constants of galvanometers is to specify the value of the resistance in circuit with an E.M.F. of one volt to produce unit deflection. This is termed the "resistance constant." In the case of a reflecting galvanometer, the current required to produce a deflection of one millimetre from the scale zero when the scale is one metre distant from the mirror is usually taken as the figure of merit.

Where the deflections of an instrument do not bear any simple relation to the currents producing them, the deflection produced and the current required are stated.

The figures of merit of a few types of galvanometer are shown in the table on the next page.

Number of Convolutions. In any galvanometer, the sensitivity is directly proportional to the number of convolutions of wire occupying the same space in a coil. This will be clear from the considerations discussed on page 83. In order to obtain a large number of turns of wire, a small gauge is selected, and thus the resistance of the coil may become considerable, so that the term "high-resistance galvanometer" has come to be synonymous with "galvanometer of high sensitivity." It is interesting to note that if a

GALVANOMETERS: FIGURES OF MERIT

Type	Resistance of Coils	Figure of Merit
Single coil . . .	30ω	9·3 mA for deflection to stop-pin
Differential (one coil)	43ω	20 mA for deflection of 45°
Detector No. 2 . .	60ω	10 mA full scale
,, No. 4 . .	10ω	,, ,,
Horizontal . .	800ω	·048 mA for 25°
Paul unipivot . .	60ω	·6 micro-ampere per division
Single pivot reflecting	200ω	·04 micro-ampere per division
Paul reflecting (Ayrton Mather coil) .	1,400ω	·00862 micro-ampere per division
Sullivan . . .	2,000ω	·005 micro-ampere per division
Kelvin . . .	100,000ω	·0001 micro-ampere per division

particular instrument is re-wound with wire of different gauge, its sensitiveness is directly proportional to the square root of its resistance (see page 89).

For instance, if two galvanometers of equal dimensions each give 100 divisions deflection, and their resistances are respectively 900ω and 9ω, the currents indicated in the two cases will be as $\sqrt{9} : \sqrt{900}$, i.e. as 3 is to 30, or as 1 : 10. The 9ω galvanometer's 100 divisions therefore represent ten times as much current as the 900ω galvanometer giving the same deflection.

Sensitiveness and Sensitivity. If the current flowing through a galvanometer produces a certain deflection and by altering the value of this current by an extremely small fraction of its value, a comparatively large change in the deflection results, the galvanometer would be said to be highly sensitive. In comparing two instruments, the galvanometer which would produce the largest alteration in deflection corresponding to the minute fractional change of current value would be termed the more sensitive instrument. This is the strict meaning of the term, but it is often employed as a substitute for " sensitivity," i.e. " small figure of merit," or " large resistance constant."

GALVANOMETER SHUNTS

The value of the current which can be measured by any particular galvanometer is distinctly limited. For instance, a Detector No. 2 gives a full scale deflection with 10 mA. If it is desired to measure a larger current, two courses are open, either to re-wind the moving coil with a proportionally smaller number of turns of wire, or to divert a large known portion of the current and to infer the value of the total current from a knowledge of the actual current shown upon the galvanometer and the proportion diverted.

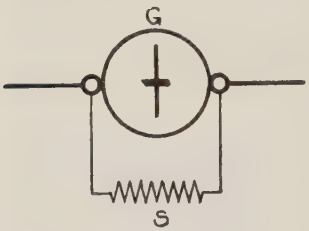

FIG. 59. SHUNTED GALVANOMETER

Principle. The method of diverting a known proportion of the current through another path placed in parallel with the galvanometer is termed "shunting the galvanometer," and the resistance employed is, in this connection, termed a "shunt." The arrangement is shown in Fig. 59, where the galvanometer G has a shunt S connected across its terminals. The current entering the instrument divides between the galvanometer and the shunt in direct proportion to their conductances. If the resistances of the galvanometer and its shunt are equal, one half of the current flows through each path. The galvanometer, therefore, indicates $\frac{1}{2}$ of the current flowing through the whole arrangement. The current indicated upon the galvanometer must, therefore, be multiplied by 2, and 2 is accordingly termed the multiplying power of the shunt. The shunt is termed a $\frac{1}{2}$ shunt.

Let the resistance of the galvanometer under consideration be 90^{ω}, and then determine the consequences following the use of various shunt resistances. It has already been shown that if the shunt were 90^{ω} it would be termed a $\frac{1}{2}$ shunt, and have a multiplying power of 2. If now the shunt were 45^{ω},

two-thirds of the total current would pass through the shunt and one-third through the galvanometer, therefore it would be a $\frac{1}{3}$ shunt.

The following table gives the particulars of ten different shunts which might be applied to the 90ω galvanometer, together with various facts derived therefrom—

Resistance of galvanometer (ohms)	Resistance of Shunt (ohms)	Proportion of the total Current in the Galvanometer	Proportion of the total Current in the Shunt	Name of Shunt	Multiplying power of Shunt	Joint Resistance of Galvanometer and Shunt
90	90	$\frac{1}{2}$	$\frac{1}{2}$	$\frac{1}{2}$	2	45
90	45	$\frac{1}{3}$	$\frac{2}{3}$	$\frac{1}{3}$	3	30
90	30	$\frac{1}{4}$	$\frac{3}{4}$	$\frac{1}{4}$	4	22·5
90	18	$\frac{1}{6}$	$\frac{5}{6}$	$\frac{1}{6}$	6	15
90	15	$\frac{1}{7}$	$\frac{6}{7}$	$\frac{1}{7}$	7	12·9
90	10	$\frac{1}{10}$	$\frac{9}{10}$	$\frac{1}{10}$	10	9
90	9	$\frac{1}{11}$	$\frac{10}{11}$	$\frac{1}{11}$	11	8·2
90	$4\frac{1}{2}$	$\frac{1}{21}$	$\frac{20}{21}$	$\frac{1}{21}$	21	4·3
90	2	$\frac{1}{46}$	$\frac{45}{46}$	$\frac{1}{46}$	46	1·9
90	1	$\frac{1}{91}$	$\frac{90}{91}$	$\frac{1}{91}$	91	·99

The shunt takes its name from the fraction of the total current flowing through the galvanometer itself. If the 90ω galvanometer unshunted gave a deflection of 20 divisions with 1·5 mA flowing through its coils, the value of 20 divisions with each of the shunts shown would be 1·5 mA multiplied by the multiplying power of the shunt, e.g. $\frac{1}{2}$ shunt $(1{\cdot}5 \times 2)$ mA ; $\frac{1}{3}$ shunt $(1{\cdot}5 \times 3)$ mA ; $\frac{1}{4}$ shunt $(1{\cdot}5 \times 4)$ mA, etc.

From a consideration of the numerical examples given for this particular galvanometer, it will be observed that the following relations hold—

$$\text{Multiplying power} = \frac{\text{galvo. res.} + \text{shunt res.}}{\text{shunt res.}} \quad . \quad (1)$$

$$\text{Shunt res.} = \frac{\text{galvo. res.}}{\text{multiplying power} - 1} \quad . \quad (2)$$

Rule I states that the multiplying power of a shunt is equal to the sum of the resistances of the galvanometer and the shunt, divided by the resistance of the

shunt. In the case of the 10^{ω} shunt to the 90^{ω} galvanometer, its multiplying power is at once found to be—

$$\frac{90 + 10}{10} = 10$$

The second rule enables the resistance of the shunt necessary to reduce the current through the galvanometer itself in any desired proportion to be ascertained. The shunt resistance required is equal to the galvanometer resistance divided by a number obtained by subtracting unity from the power of the shunt required. In the case of the 90^{ω} galvanometer, if it is desired to apply a $\frac{1}{6}$ shunt, its resistances must be—

$$\frac{90}{6 - 1} = 18^{\omega}$$

Having established these rules, the following numerical examples of their application should be clear—

EXAMPLE 1. A galvanometer of 320^{ω} resistance, having a constant of 80 divisions per milliampere is shunted by a resistance of $35\frac{5}{9}^{\omega}$. What is the power of the shunt, and what is the constant of the shunted instrument?

$$\text{From (1) multiplying power} = \frac{320 + 35\frac{5}{9}}{35\frac{5}{9}}$$
$$= 10$$
$$\text{Constant when shunted} = \tfrac{1}{8} \text{ mA per division.}$$

EXAMPLE 2. What resistance must be applied to a 320^{ω} galvanometer in order to shunt it $\frac{1}{5}$, and what will be its constant if, when unshunted, 80 divisions represent 1 mA?

$$\text{From (2) shunt} = \frac{320}{5 - 1} = 80^{\omega}$$

Unshunted, 80 divisions = 1 mA
Shunted $\frac{1}{5}$, ,, ,, = 5 mA
or 16 ,, = 1 mA

It will be obvious that the application of a shunt to a galvanometer reduces the resistance of the instrument as a whole. The resistance is then equal to the product of the resistances of the galvanometer and shunt divided by their sum. Fortunately, a much

simpler relation holds in the case of a galvanometer and shunt. It is—

$$\text{The combined resistance} = \frac{\text{resistance of galvanometer}}{\text{multiplying power of shunt}} \quad . \quad . \quad (3)$$

For instance, the combined resistance of the 320^{ω} galvanometer and shunt dealt with in the last example will be, according to this rule, $\frac{320}{5} = 64^{\omega}$, a result which may readily be verified.

Compensating Resistance. The reduction in the resistance of a circuit containing a galvanometer, due to the application of a shunt, leads to an increased value of current through that circuit. The application of the $\frac{1}{5}$ shunt, therefore, would not reduce the value of the current from, say, 200 divisions to 40 divisions. If the resistance of the circuit, exclusive of the galvanometer, were absolutely nil, the application of the shunt would not reduce the deflection at all. This fact led Kempe to design a special shunt box in which each shunt when applied also introduced a resistance in the main circuit equivalent to the decrease produced by its application. This resistance was termed a compensating resistance, and in the case of a 320^{ω} galvanometer with $\frac{1}{5}$ shunt would be $320 - \frac{320}{5} = 256^{\omega}$. The joint resistance added to the compensating resistance is, of course, 320^{ω}, so that the application of the shunt would not alter the resistance of the apparatus as a whole.

The device has not, however, found favour in practice for two reasons, firstly, its cost, and secondly, that in the majority of cases the resistance of the galvanometer or of the galvanometer and shunt is but a small fraction of the resistance of the circuit as a whole. In the few cases where this is not the case, the calculation of the effect of the diminished resistance is comparatively simple.

Shunts are very frequently employed in connection with reflecting galvanometers, and usually three values are supplied ,viz. $\frac{1}{10}$, $\frac{1}{100}$, and $\frac{1}{1000}$. Unfortunately, many makers insist upon labelling these shunts with the fraction of the resistance of the galvanometer, i.e. $\frac{1}{9}$, $\frac{1}{99}$, and $\frac{1}{999}$. This fact occasionally leads to some confusion in the minds of students. Such a shunt box is illustrated in Fig. 60. The two terminals are connected to the galvanometer, and the particular shunts are introduced by placing the plug between the central block and the particular shunt required. At the back is placed a small movable switch which, upon being moved downwards, short-circuits the shunts altogether.

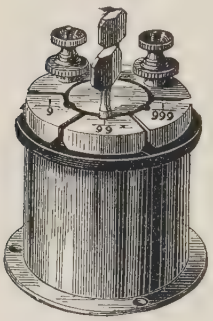

FIG. 60. GALVANOMETER SHUNT BOX

The following examples show a couple of problems which may arise in connection with shunts as applied to reflecting galvanometers.

EXAMPLE 3. A galvanometer of 950ω resistance shunted $\frac{1}{10}$ gives a deflection of 53 divisions. What must be the resistance of the shunt applied to increase the deflection to 240 divisions ?

Galvanometer shunted $\frac{1}{10}$ gives 53 divisions.
$\therefore$ Galvanometer unshunted gives 530 divisions.

Mult. power of shunt to reduce 530 to 1 division $= 530$

$\therefore$,, ,, ,, ,, increase 1 div. to 240 divs. $= \frac{530}{240}$

$$\text{Shunt} = \frac{950}{\frac{530}{240} - 1} = \frac{950}{290} = 786{\cdot}2\omega$$

EXAMPLE 4. If the constant of a galvanometer of 800ω resistance is ·002 mA per division, what will be its constant when shunted by a resistance of 55ω ?

$$\text{Multiplying power} = \frac{800 + 55}{55}$$

Unshunted. Value of 1 division = ·002 mA

Shunted. ,, ,, ,, $= ·002 \times \frac{855}{55}$

$= ·03109$ mA approx.

Universal Shunt. The arrangement of shunts, previously considered, possesses the very great disadvantage that each set must be specially designed for the particular resistance of galvanometer with which it is

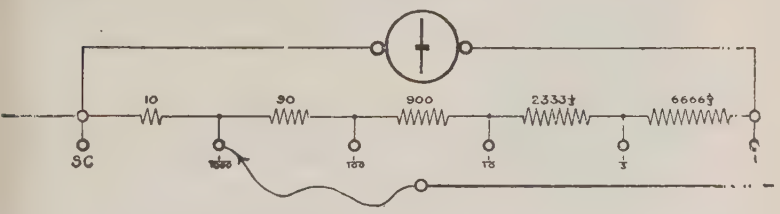

Fig. 61. Principle of the Universal Shunt

to be used. This defect has been met by the invention of the universal shunt by Ayrton and Mather. This shunt may be applied to any galvanometer, irrespective of its resistance, and still give equally accurate results. On page 139 it was stated that

$$\text{Multiplying power} = \frac{\text{galvo. resistance} + \text{shunt res.}}{\text{shunt res.}}$$

If now the resistance of the galvanometer added to the shunt resistance could always have the same value, the multiplying power of the shunt would be inversely proportional to the resistance of the shunt.

In the universal shunt this object is attained by placing a subdivided resistance of $10{,}000^{\omega}$ directly across the terminals of the galvanometer, and adding a radial contact arm moving over the series of studs in connection with those subdivisions. The arrangement is conventionally depicted in Fig. 61. When the

arm is on the position marked 1 the galvanometer is shunted by $10{,}000\omega$.

If the arm is moved to $\frac{1}{3}$ the resistance thrown into the circuit of the galvanometer is $6666{\cdot}7\omega$, and across this is a resistance of $\frac{1}{3}$ of $10{,}000\omega = 3333{\cdot}3\omega$. Since the resistance of the galvanometer circuit and the resistance of the shunt proper is the same as in the first case (galvo + $6666{\cdot}\dot{6}$) + $3333{\cdot}\dot{3}$, the multiplying power is inversely proportional to the shunt resistance proper ($3333{\cdot}3\omega$) and is, therefore, precisely three times that in the first case. It will be recognized that the value of the resistance of the galvanometer + shunt is the same for each position of the contact arm, and it therefore follows that—

$$\text{Multiplying power} = \frac{\text{total res. of box*}}{\text{res. of shunt}}$$

A very little consideration of the figures given upon the sketch will show the truth of these facts. The practical form of the shunt box is shown in Fig. 62. It has thirteen powers, viz. 1, 2, 5, 10, 20, 50, 100, 200, 500, 1000, 2000, 5000, and 10,000.

Usually the total resistance of the box is either 1000ω, $10{,}000\omega$, or $100{,}000\omega$, but it will be equally obvious that any value might be chosen. It is, however, advisable not to have too great a disparity between the

* Let R = total resistance of shunt box
b = resistance of shunt
G = galvanometer resistance
C = current through galvanometer coils
C_1 = ,, ,, apparatus with shunt $R\omega$
C_2 = ,, ,, ,, ,, ,, $l\omega$

$$C_1 = C\,\frac{R}{R+G} \text{ and } C_2 = C\,\frac{b}{R+G}$$

$$\therefore \frac{C_1}{C_2} = \frac{R}{b}, \text{ or } C_1 = C_2\,\frac{R}{b};$$

that is, the multiplying power of the shunt is $\frac{R}{b}$

resistance of the galvanometer and the total of the shunt box, as this leads to loss of sensitiveness.

A notable advantage gained by using the universal shunt is that the resistances required are mostly whole numbers, and where not so, the values are quite simple and readily obtained fractions. This is a remarkable advance upon the $\frac{1}{999}$ of 8576ω, which would have to be calculated and provided for an instrument of 8576ω shunted $\frac{1}{1000}$. The fact that the new shunts may be applied to any galvanometer without reference to, or knowledge of, its resistance cannot be too highly estimated.

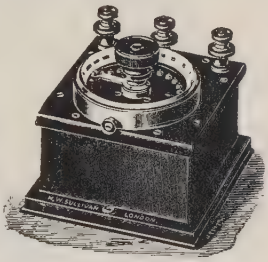

Fig. 62. A Universal Shunt Box

If ordinary shunt coils were wound with nickel silver or manganin wire, a temperature error would be introduced. This can be avoided by winding the coils with copper wire so that changes in temperature may affect equally both the shunt and the galvanometer coils. With the universal shunt this source of error does not arise since the shunt is independent of the galvanometer resistance. Compensating resistance boxes can only be used with ordinary individual shunts.

Constant of Reflecting Galvanometer. With a reflecting galvanometer the constant is taken in a similar manner, but usually considerable accuracy is required, and, therefore, a Clark cell is employed. A resistance of $10{,}000\omega$ or $100{,}000\omega$ is inserted with the cell and galvanometer. The galvanometer is usually heavily shunted.

As an example, suppose that the Clark cell E.M.F. 1·433 volts (at the temperature at which the test is made) is joined to a 5000ω galvanometer shunted $\frac{1}{100}$ through a resistance of $100{,}000\omega$, and that a deflection of 200 divisions resulted—

Resistance of galvanometer and shunt	=	50^{ω}
Standard cell about		50
Resistance coil 100,000 . . .		100,000
Total		100,100

$$\therefore \text{ total current} = \frac{1{\cdot}433}{100{,}100} = {\cdot}01432 \text{ mA}$$

Current through galvanometer	= ·0001432 mA
Value of 1 division	= ·000000716 mA

PART III. THE MEASUREMENT OF E.M.F.

In order to measure the current flowing, an ammeter or milliampere meter is interposed in the circuit. It is, therefore, essential that the resistance of the instrument shall be small in comparison with the resistance of the circuit into which it is introduced. For, if this be not so, the ammeter resistance, which is added to circuit resistance, diminishes the value of the current, and the instrument does not, therefore, indicate the value of the original current.

If the resistance of a circuit is so high that the resistance added by including the resistance of the battery or other source of E.M.F. may be neglected, and the resistance, therefore, can be considered constant, the current produced in the circuit will depend upon and be directly proportional to the E.M.F. applied. A voltmeter is directly connected to the two points between which it is required to measure the E.M.F. or potential difference, and by similar reasoning to that employed to show that the resistance of an ammeter must be low, it will be recognized that a voltmeter must have a high resistance, since its connection across a circuit must not appreciably vary the resistance of, and, consequently, the difference of potential existing across, the circuit.

A voltmeter (unless on the electrostatic principle) may be defined as a high-resistance galvanometer or

current-measuring device of unvarying constant with a scale marked in volts. For example, take a milliampere meter reading from 0 to 1 mA by gradations of ·01 mA, and bring up its resistance to, say, 10,000ω by adding a resistance coil in series with it. Then, since $C \times R = E$, a reading of 1 mA requires an E.M.F. of

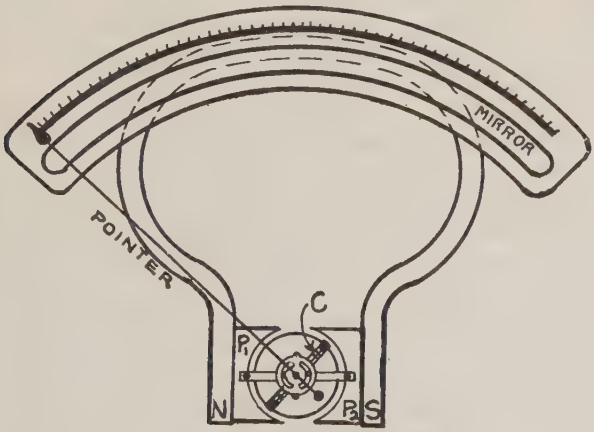

FIG. 63. WESTON VOLTMETER

$\cdot 001 \times 10{,}000 = 10^{V}$ to be applied to the instrument and each division represents ·1 volt. To double the range of the instrument it is merely necessary to double its total resistance. Additional resistance coils used to increase the resistance of the instrument for extended range of measurement are termed multipliers.

The Weston voltmeter (Fig. 63) consists of a D'Arsonval galvanometer with an aluminium pointer controlled by the moving coil C and two flat spiral hair springs. These springs, which provide the controlling force, are of non-magnetic material and are placed in front of, and at the end of, the pivoted moving coil, and serve also to connect the ends of the coil to the stationary terminals of the instrument. The scale is marked from 0 to 15 volts, but by using a suitable

resistance coil in series (i.e. a multiplier) the divisions read ten times these values, viz. from 0 to 150^{v}. The resistance of the instrument is 1677·5$^{\omega}$ for 15^{v}, and 16,775$^{\omega}$ when reading to 150^{v}.

The resistance of the No. 2 Detector (see Fig. 36) when reading to 5^{v} is 500$^{\omega}$, and a 4500$^{\omega}$ multiplier is added to extend the range to 50^{v}. Each sca'e division represents a current of ·2 mA, and, therefore, with the resistance of the instrument at 500$^{\omega}$ is equivalent to $500 \times \cdot0002 = \cdot1^{v}$ and at 5000$^{\omega}$ to 1^{v}.

There are many other types of voltmeter in general use, but they may be classified as moving iron types, hot wire types, and electrostatic types. The moving iron types frequently are identical with the moving-iron ammeter, but with a solenoid of fine wire to render the instrument sensitive and to increase its resistance. In the hot wire types, in which the current, by heating the wire, produces expansion of the wire or strip, and so determines the motion of a pointer, a resistance coil is necessarily added to the instrument. The electrostatic instruments depend upon the attraction and repulsion between two charged vanes, one of which is movable. All these instruments may be used to measure alternating currents, whereas moving coil instruments cannot.*

Principle of Potentiometer. The potentiometer method of measuring E.M.F.'s is one of extreme accuracy and it is also a " null " or " zero " method, a term which signifies that the result of the test does not depend upon the observation of the value of a deflection, the galvanometer being used merely to *indicate* the existence or absence of a difference of potential and not to *measure* its value.

A long wire of uniform material and cross-section, and of high resistivity, is stretched above a scale of equal divisions between two terminals (Fig. 64). A contact point with a terminal attached to it slides over the wire and a secondary

* Descriptions of a number of instruments of these various types will be found in Perren Maycock's *Electric Lighting and Power Distribution*, Vol. I, p. 361 *et seq.*

cell with an adjustable resistance sends a steady unvarying current through the slide wire, but this current must not be so large as to heat the wire appreciably. As the wire is of uniform resistance the potential due to the current flowing in the wire falls uniformly along it. For example, if the difference of potential between 0 and 1000 is 1·5^{v}, the difference of potential between 0 and 500 is ·75^{v}; in fact, each division

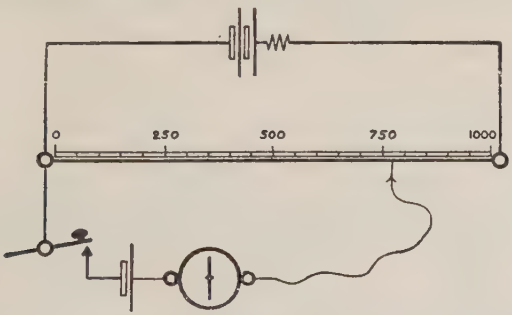

Fig. 64. Potentiometer Method of Measuring the E.M.F. of a Cell

represents $\frac{1{\cdot}5}{1000} = {\cdot}0015^{v}$. The point marked 0 is termed the zero of the scale, and the potentials along the wire considered with respect to it.

If now one end of a standard cell, with a galvanometer in series with it, be attached to the 0 end of the wire, while the other terminal is connected with the slider, a point can be found upon the slide wire where the difference of potential from 0 to that point is equal to the E.M.F. of the cell. Such a point is found by moving the slider until the galvanometer shows no deflection. When this is the case, the difference of potential between 0 and the slider is equal to the E.M.F. of the cell. Since no current flows under these conditions the difference of potential between the negative pole of the cell and the opposite end of the galvanometer is clearly the same as that between the terminals of the cell. If this were not so, there would be a difference of potential between the terminals of the galvanometer, but this is not the case, since there is no deflection.

The difference of potential between 0 and the slider has now been determined, since it is known to be equal to the E.M.F. of the standard cell. Assume that the E.M.F. of the standard

cell is 1·434 volts, and that the point at which the slider stands, for brevity usually termed the "reading," is 760 divisions. Therefore 760 divisions equal 1·434 volts, and one division will therefore be equal to $\frac{1}{760}$ of 1·434 volts. The standard cell is then removed and its place taken by the cell to be tested. The same procedure is followed, and a place is accordingly found where there is no deflection. Let this reading be 580 divisions. The difference of potential per division has already been found to be $\frac{1{\cdot}434}{760}$ volts, therefore 580 divisions represent 580 times as much. The E.M.F. of the cell is therefore—

$$580 \times \frac{1{\cdot}434}{760} = 1{\cdot}094 \text{ volts.}$$

The operation of finding the null point is very simple, since the direction of the deflection is determined by whether the slider is to the left or to the right of the point of balance, and the magnitude of the deflection by the distance from the balance point.

The accuracy of the method is only limited by the accuracy with which the slide-wire divisions can be read. This may greatly be increased by the use of a vernier. There are, however, two distinct assumptions made in the course of the tests, firstly, that the current flowing along the slide wire is absolutely invariable, and secondly, that the slide wire is absolutely uniform in resistance. The first assumption holds good if a secondary cell or cells are employed and the measurements are taken in rapid succession. The second one is not so readily met, the wire never is uniform, and, even if it were, it would very soon be damaged by continual use. This difficulty may be met by calibration, i.e. determining the resistance of the wire between a large number of points.

Consideration will show that the cell to be tested may be applied to the wire with a second slider, while the standard call is also connected. In this way, by watching both galvanometers it can be made quite certain that the value of the current through the slide wire is absolutely the same for both tests.

Rayleigh's Compensation Method. In order to illustrate further the principle of the potentiometer it will be convenient to describe Rayleigh's compensation method of measuring E.M.F. Instead of a slide wire two boxes of coils, R and C (Fig. 65), each of which will give any integral value of resistance up to at least 10,000ω, are connected together by a short piece of thick wire, and a current from one or even two secondary

cells is caused to flow through both in series. The resistance between the terminals of the battery is kept constant at 10,000ω, i.e. the resistance unplugged in R added to that of C is always kept equal to 10,000ω. When R is increased C is reduced by an exactly equal amount. The standard cell, together with a highly sensitive galvanometer, a large resistance coil T, and a suitable key, are connected to the ends of R.

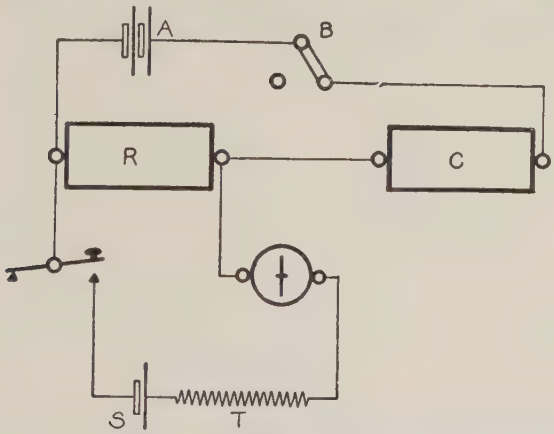

FIG. 65. RAYLEIGH'S COMPENSATION METHOD OF MEASURING THE E.M.F. OF A CELL

R is then adjusted until no deflection is shown upon the galvanometer when the key is depressed. With each increase of resistance in R, C is decreased by exactly the same amount, thus keeping the sum of R and C constant at 10,000ω. The difference of potential between the ends of R is equal to the E.M.F. of the standard cell. The value of R is noted and the cell to be tested is then substituted and R is readjusted until no deflection is obtained when the key is depressed. As in the previous test R and C together must be kept at 10,000ω during the whole process.

The object of the coil T, which may have a resistance of from 100,000ω to 200,000ω, is to prevent any large value of current from flowing through the galvanometer and cell owing to any accidental mistake.

A numerical example of the method is appended—

The standard cell E.M.F. 1·434 volts balanced when R was

7352^{ω} and the cell under test when R was 6853^{ω}. What is the E.M.F. of the cell tested ?

$$7352^{\omega} : 6853^{\omega} :: 1{\cdot}434 : \text{E.M.F.}$$

$$\therefore \text{E.M.F.} = \frac{6853 \times 1{\cdot}434}{7352} = 1{\cdot}3367 \text{ volts.}$$

It may be remarked that when R was 7352^{ω} C must have been $10{,}000 - 7352 = 2648^{\omega}$, and when 6853^{ω}, C must have been 3147^{ω}. The direction and magnitude of the deflection obtained when altering R serves as a guide in finding the required value.

CHAPTER V

THE MEASUREMENT OF RESISTANCE AND BATTERY TESTING

PART I. THE WHEATSTONE BRIDGE

A WHEATSTONE bridge comprises three sets of resistance coils, a battery and a galvanometer. With this apparatus the resistance of any line, instrument, or other system of conductors can readily be measured. The three resistances are usually included in a single box and the term Wheatstone Bridge is employed to denote only the box of coils. The apparatus is connected as shown in Fig. 66, the resistance x to be measured being connected between A and D. The three resistances CA, CB, and BD are then varied until the galvanometer is undeflected with K_2 and K_1, closed when the resistance

$$CB : BD :: CA : AD.$$

Theory of the Wheatstone Bridge. CAD and C_1BD_1 (Fig. 67) are two wires whose resistances are represented by their respective lengths. Their extremities are joined by two heavy conductors CC_1 and DD_1 of negligible resistance, to which a battery is connected to maintain a constant difference of potential between the ends of the wires. Taking CC_1, which is connected to the negative pole of the battery as zero potential, the potential at D and D_1 is represented by DV_1 and $D_1V_1^1$ and the fall of potential along the two wires by V_1V_2C and $V_1^1V_2^1C_1$. Take any point A on CD. The potential will have fallen from DV_1 to AV_2 at this point. If on C_1D_1 a point B is found where the potential has fallen to BV_2^1 equal to AV_2, then the relative position of A along CD is similar to the relative position of B along C_1D_1, i.e. the resistances

$$C_1B : BD_1 :: CA : AD.$$

The point B along C_1D_1 is found by connecting a galvanometer to A and moving B until equal ty of potentials is indicated by the absence of deflection.

The P.O. Form of Wheatstone Bridge. The four

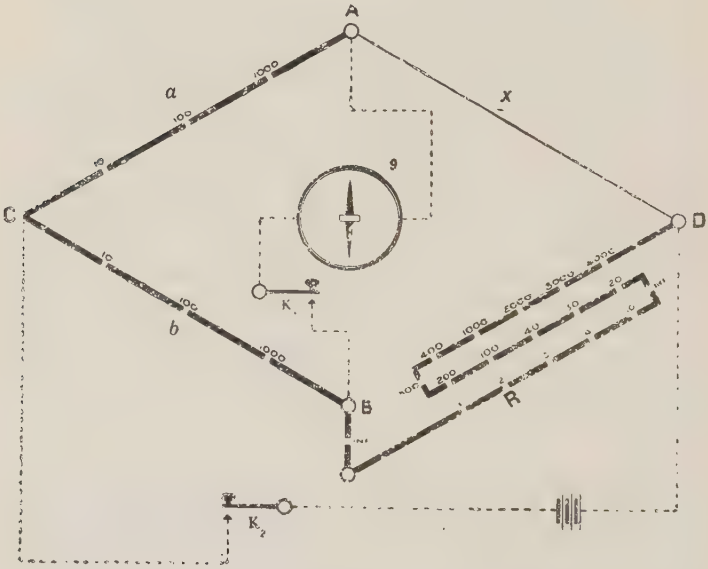

Fig. 66. Arrangement of Wheatstone Bridge

resistances CB, BD, CA, and AD in Fig. 66 are respectively arranged in the same way as C_1B BD_1, CA and AD, and when the galvanometer connected between A and B is undeflected (K_2 and K_1 being closed) the resistances

$$CB : BD :: CA : AD$$

or, using the single letters to denote the four resistances (Fig. 66).

$$b : R :: a : x, \text{ i.e. } a \times R = b \times x$$

$$\text{or } x = \frac{a}{b} \times R$$

The resistances a and b, termed the proportionals or ratio arms, usually each consist of three resistance coils 10^{ω}, 100^{ω}, and 1000^{ω}. The third, or rheostat, arm contains 16 coils, by means of which resistance

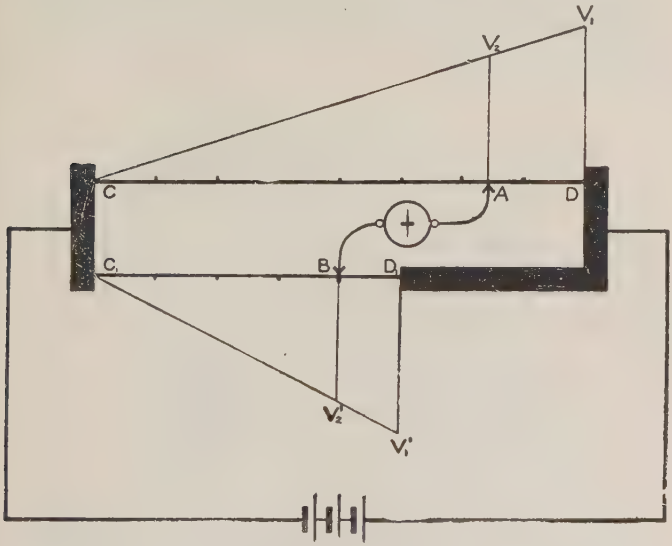

FIG. 67. PRINCIPLE OF WHEATSTONE BRIDGE

from 1^{ω} to $11{,}110^{\omega}$ by gradations of 1^{ω} may be inserted.

If a and b are given equal values the resistance in R is equal to the unknown resistance x. With $a = 1000$ and $b = 10^{\omega}$ the unknown resistance x is 100 times that of R, and the highest resistance which such a bridge can measure is, therefore, $100 \times 11{,}110^{\omega} = 1{\cdot}111$ megohms. The ratio of a to b may be made 1, 10, 100, $\frac{1}{10}$, or $\frac{1}{100}$, thus theoretically providing for the measurement of any resistance from $\cdot 01^{\omega}$ to 1·111 megohms. Since all these ratios are multiples or sub-multiples of 10, the value of any resistance tested may be written down without calculation. For instance, if

a is 100, b is 1000, and R is 1536, when a balance is obtained the resistance tested is $153{\cdot}6^{\omega}$.

The direction of the deflection on the galvanometer at once indicates whether the resistance inserted in R is greater or less than that required to produce a balance.

The actual arrangement of the P.O. pattern is shown in Fig. 68, the ratio arms BC and CA being lettered

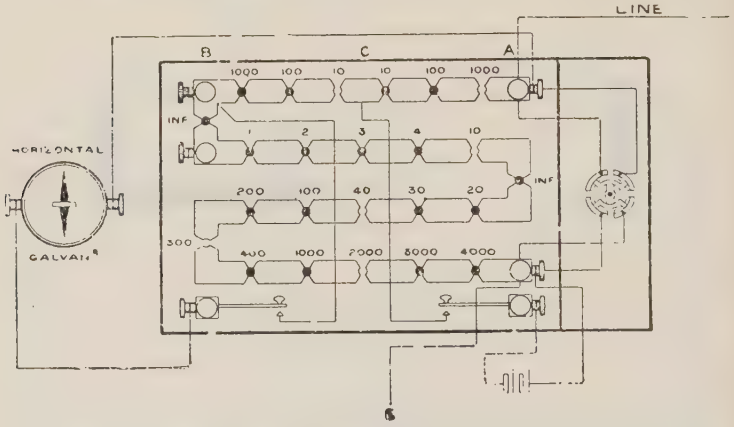

Fig. 68. Actual Arrangement of a Wheatstone Bridge of the P.O. Pattern

to correspond with Fig. 66. It is often required to reverse the direction of the testing current through the resistance to be measured (*vide* page 158), and this is effected by turning the handle of the reversing switch on the side of the box (compare Figs. 68 and 69). The ends of the ratio arm CA and the rheostat arm are connected to double terminals (Fig. 69), the upper and lower binding screws being insulated from each other by a flanged ebonite tube. With the handle in the position shown in Fig. 69 A is joined through to the upper part of the terminal through the upper pair of connected brass quadrants, and R is similarly connected to the upper terminal above R. By turning the

handle through 90 degrees A is joined to the upper part of R and R to the upper part of A. This arrangement is preferable to reversing the battery, since the reversal of the switch does not alter the meaning of the direction in which the needle deflects. A deflection to the right, say, still means that too much resistance has been inserted, whereas on the reversal of the battery itself

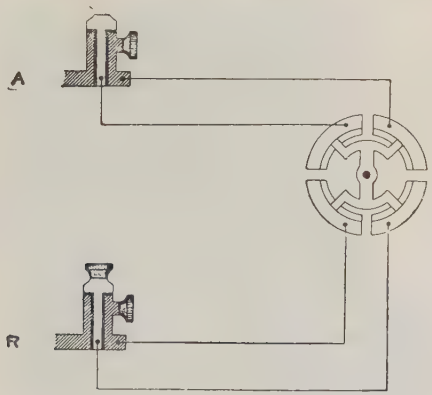

FIG. 69. BRIDGE TERMINALS

it would mean that too little resistance had been inserted, which would tend to confusion in making the successive tests.

Practical Use of the Bridge. The battery power required when using the bridge in conjunction with the horizontal galvanometer (Fig. 34) or the Paul unipivot galvanometer (Fig. 32) is usually of the order of 20^{v}. For testing insulation resistances twice this may be used when the proportionals bear the ratio of 10 and 100 respectively. For measuring very low resistances but 10 cells should be used. It may, however, be pointed out that a Wheatstone Bridge is not a satisfactory instrument for measuring resistances greatly below one ohm, owing to the resistance which is

necessarily introduced in the connections that have to be made.

In measuring a resistance by means of the Wheatstone Bridge, the following rules should be observed—

1. The values of the resistance inserted in the proportionals should be as near to that of the resistance to be measured as is possible.

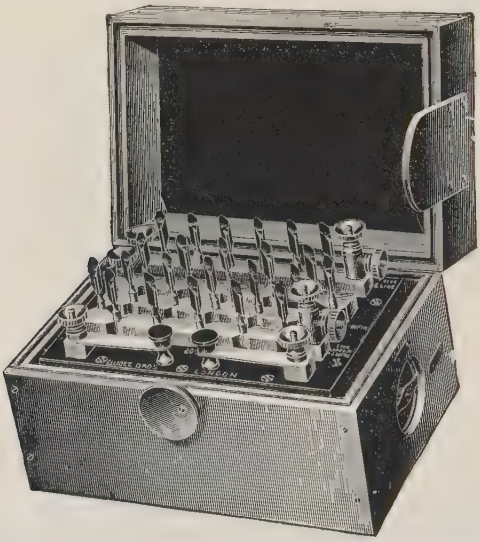

Fig. 70. View of a Wheatstone Bridge

2. The right-hand (battery) key should be depressed before the left (galvanometer) key.

3. The battery should be applied for the shortest possible time.

4. In the case of measurements of resistances containing an E.M.F. the resistance should be measured with both directions of current.

These rules are obtained by mathematical investigations, but they may be verified by taking a few simple numerical cases. For instance, let the rheostat arm

have a resistance of 101^{ω} with 100^{ω} connected as the unknown resistance. It will be found that with a given E.M.F. the difference of potential across the galvanometer is much greater with the two 100^{ω} than with the two 10^{ω} or the two 1000^{ω} proportionals. It will be obvious that the galvanometer will be unaffected if the proportionals have no resistance, even when the rheostat arm has no resistance inserted whilst the fourth arm is disconnected.

Let it be known that the resistance to be measured is between 500^{ω} and 800^{ω}. From Rule 1 the values of the proportionals should be 1000^{ω} each in preference to 10 : 10 or 100 : 100. In the present case it will be assumed that the resistance to be tested is entirely free from E.M.F. Rules 2 and 3 should be observed in the case of each measurement.

Firstly, the infinity plug should be taken out and the keys depressed. If no deflection results, either the battery is disconnected or the resistance to be measured is disconnected. A deflection proves that the value of the resistance is less than infinity. The direction of the deflection (usually arranged to be to the right) indicates that the resistance inserted in the box is too great.

The following operations would result—

Resistance Unplugged	Deflection Towards	Unknown Resistance is
Infinity	Right	Between 0 and infinity
1000 ohms	Right	,, 0 ,, 1000 ohms
400 ,,	Left	,, 400 ,, 1000 ,,
600 ,,	Left	,, 600 ,, 1000 ,,
650 ,,	Right	,, 600 ,, 650 ,,
630 ,,	Left	,, 630 ,, 650 ,,
640 ,,	Left	,, 640 ,, 650 ,,
645 ,,	Right	,, 640 ,, 645 ,,
643 ,,	Right	,, 640 ,, 643 ,,
642 ,,	Nil	642 ohms

Measurement of Resistances having Capacity, Inductance, or an E.M.F. The battery and galvanometer keys greatly facilitate the measurement of resistances having capacity or inductance. The coils of the bridge are double-wound so as to have the minimum amount of inductance. Reference to Fig. 66 will show that when the resistance unplugged in *BD*

is too little the galvanometer deflects to the right, whilst too large a resistance produces a deflection to the left. If an electro-magnet having a resistance of 100ω is placed in the fourth arm of the bridge with 100ω inserted in each of the other arms, a perfect balance will be obtained when the current has attained its steady value. By depressing the battery key before the galvanometer key, ample time will have been allowed for the

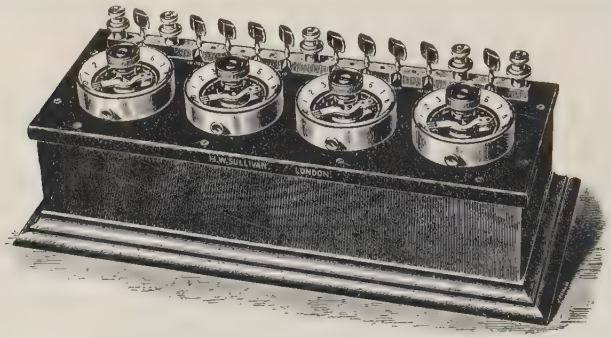

Fig. 71. Dial Pattern Bridge used for Precision Testing

current to rise to its full value in the electro-magnet and the galvanometer will be unaffected. If, however, the galvanometer key is depressed before the battery key, the galvanometer will be momentarily deflected owing to the E.M.F. of self-induction opposing the current. The direction of the kick will be such as to indicate that not enough resistance has been unplugged in the box.

When the resistance to be measured possesses capacity, a rush of current takes place into the cable or condenser, as the case may be. This upsets the balance in the opposite direction to inductance, and the deflection therefore is such as to indicate that too much resistance has been inserted. By depressing the battery key before the galvanometer key the current attains its Ohm's law value before the galvanometer is applied, and therefore a perfect balance is obtained when the four resistances bear the correct relations to each other.

Having obtained a balance it may be ascertained whether the circuit possesses capacity or inductance by depressing the galvanometer key first. Where both are present this test is inconclusive, since either may predominate or they may be balanced.

When the circuit under test has an E.M.F. in it a deflection will be observed when the galvanometer key only is depressed (provided resistances are unplugged in the proportionals). The same effect may, however, be produced by defective insulation of the testing battery, but this is readily verified by disconnecting the bridge from the line under test but leaving on the earth connection. This defect is not uncommon,

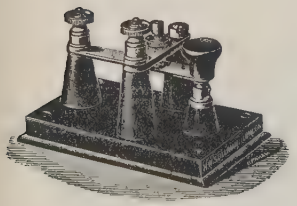

Fig. 72. Short-circuiting Key

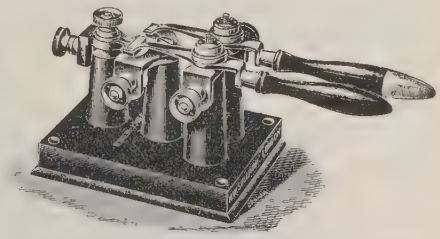

Fig. 73. Rymer Jones Charge and Discharge Key

especially where dry cells have to be used in the open, but it may be eliminated by standing the cells upon a perfectly dry board.

Wheatstone Bridge for Precision Testing. The pattern adopted by the Post Office is shown in Fig. 71, The rheostat arm consists of four dials, thousands. hundreds, tens, and units, and there are four pairs of proportionals, 10,000, 1000, 100, 10 ohms. Finely-laminated copper brushes ride over gold-silver faced contacts, and each dial is protected from dust and moisture by a removable glass cover. The values of the coils are determined with the highest degree of accuracy possible.

Battery and galvanometer keys are provided separately, a short-circuiting key (Fig. 72) is used with the galvanometer and a Rymer Jones charge and discharge key (Fig. 73) for connecting and reversing the battery. The two handles may be moved separately or together across three end contacts. By joining one battery lead to the centre and the other to the two outer segments,

the direction of the testing current will be determined by the position of the handles to the right or left.

PART II. THE MEGGER AND BRIDGE-MEGGER

The Megger, which is the result of evolution from the original Evershed Ohmmeter,* consists of a direct current generator, and moving double coil instrument contained within a single case. The resistance of a

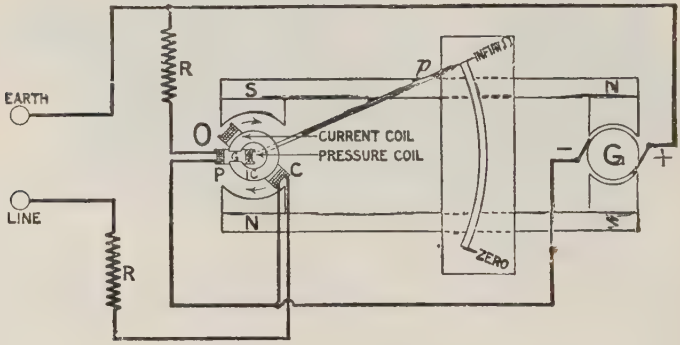

Fig. 74. Principle of the Megger

circuit in which a current is flowing is equal to the E.M.F. divided by the current. One of the two coils is urged with a force directly proportional to the current flowing, while the other coil is urged in the opposite direction with a force depending on the E.M.F. and the distance through which the coil is turned. The position which the pair of coils takes up will depend on the ratio existing between E and C, i.e. upon the resistance of the circuit. The pointer attached to the coils moves over a scale marked in ohms and megohms.

The general arrangement of the Megger is indicated in Fig. 74. The two-bar magnets SN and NS magnetized to about 2000 Gausses, furnish the magnetic

* Perren Maycock's *Electric Lighting and Power Distribution*, Vol. I. p. 324.

field for the dynamo or generator G and the moving-coil system PC. The current coil moves in the uniform field in the spaces between the fixed soft-iron core and the pole pieces, and a current passing through it tends to turn it in the direction shown by the arrowheads—the arrangement so far being identical with that of an ordinary D'Arsonval galvanometer (compare Fig. 56). It will be observed that the core IC is split, and that

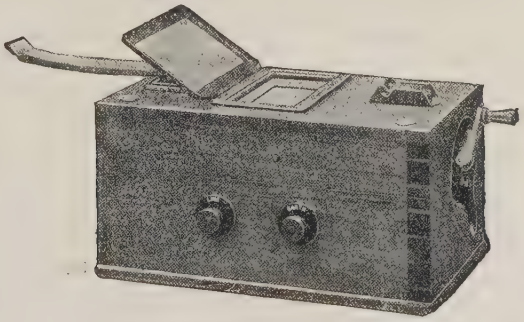

Fig. 75. View of Megger

in the position shown the pressure coil, which is threaded on the core, lies over this air gap. The magnetic field threading the pressure coil is weakest at this point, but as the coil deflects to embrace IC the field becomes stronger. A current in the pressure coil alone tends to hold it in the position shown. When both coils carry a current, the two coils and the pointer move until the forward pull of the current coil is balanced by the increasing backward drag of the pressure coil. Extremely fine phosphor bronze wire is used to lead the current to the coils, and is so arranged as to produce no appreciable opposition to the movement of the coils. With the handle of the generator at rest, the pointer is entirely free and will rest anywhere on the scale.

The generator is driven through gearing by revolving the handle to be seen in Fig. 75. To avoid any possibility of this being damaged in transit, the handle lever

is mounted on a spring-controlled hinge arranged transversely at the end of the revolving axis, so that the handle can be folded into the side of the instrument when not in use. A recess to accommodate the wooden handle can be seen in the illustration.

Terminals on the front of the case are marked respectively for connection to " Line " and " Earth."

A centrifugal governor and friction clutch ensure that the speed of revolution of the armature, and, therefore, the voltage generated, is maintained constant when the handle is turned at slightly above 100 revolutions per minute. The remarkable constancy of the E.M.F. generated is of especial importance in testing cables or similar circuits possessing capacity—since a variable E.M.F. necessarily involves condenser currents through the instrument thus producing variable readings.

The pressure coil is connected with a series resistance directly across the generator terminals, while the current coil is connected in series with the resistance to be measured, a suitable resistance inside the case being placed in series with it, to prevent mechanical damage to the instrument in case of short circuit. This resistance is, of course, taken into account in calibrating the scale—a typical scale is shown in Fig. 76.

In order to measure a resistance, it is necessary merely to connect it between the terminals marked line and earth, to turn the handle steadily and uniformly at such a speed that the clutch is felt to slip, and to read opposite the deflection of the pointer the resistance marked on the scale.

In order to protect the pressure coil from the influence of external magnetic fields, a rectangular compensating coil in series with it is fixed on the end of the pressure coil, and so connected that any E.M.F. induced in the pressure coil is balanced by the equal but opposite E.M.F. induced in the compensation coil. This precaution is necessary because the pressure coil is not, like the current coil, always wholly within a field of

large and uniform intensity. The pressure and compensation coils are fixed in the same plane, but the latter is not shown in Fig. 74, which illustrates merely the general principle of the instrument.

The instruments are constructed with various ranges of measurement and with generators giving 100^{v}, 250^{v}, 500^{v}, and 1000^{v}. The high range megger used by the Post Office reads from 5 to 1000 megohms with a pressure of 500^{v}, which latter constitutes the highest voltage used by the Department. The low range megger reads from 1000$^{\omega}$ to 10 megohms with a pressure of 100^{v}, a switch can be added to give a range 100$^{\omega}$ to 1 megohm.

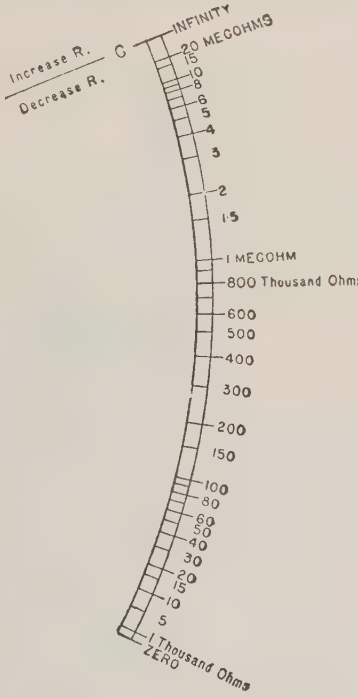

FIG. 76. SCALE OF MEGGER

Another feature of the instruments consists in the use of the Price guard-wire device which secures that neither internal nor surface leakage can affect its readings. Any error due to leakage across the surface of the insulator under test is eliminated by wrapping a wire round the insulation between the conductor and earth, and attaching it to the guard wire terminal of the instrument (Fig. 77). The guard terminal is connected to the positive terminal of the generator, and there is, therefore, no difference of

potential between the conductor and the point at which the guard wire is attached, and, on the other hand, any current escaping over the outside of the conductor to earth does not pass through the current coil of the

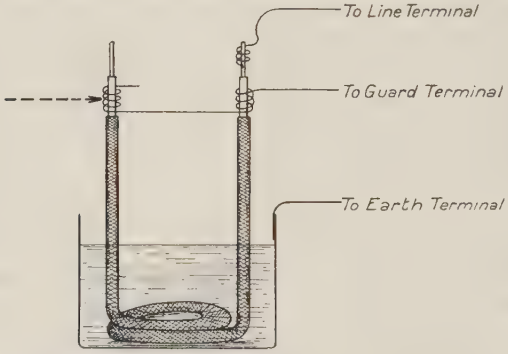

Fig. 77. Price Guard-wire Device

megger. It may be remarked that in testing the insulation resistance of cables the matter is one of great importance, since it often happens that the insulation

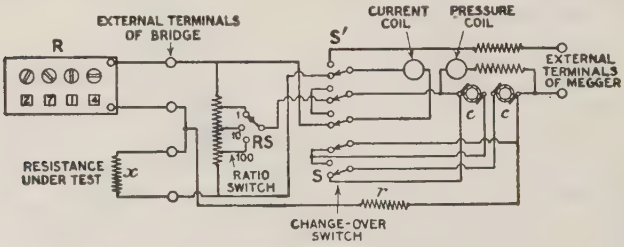

Fig. 78. Full Connections of Bridge-megger

resistance of the cable proper is much higher than the insulation resistance of its ends.

The condition of the instrument may readily be verified by measuring the insulation of a $7\frac{1}{4}$ m.f. condenser. To remove all traces of previous absorption charge, the condenser should be short-circuited for a few minutes prior to the test. The insulation should,

after the first throw to zero, during the charging of the condenser, rise evenly and steadily during the one minute's electrification (see page 186). An unsteady reading is an indication of varying voltage, a defect

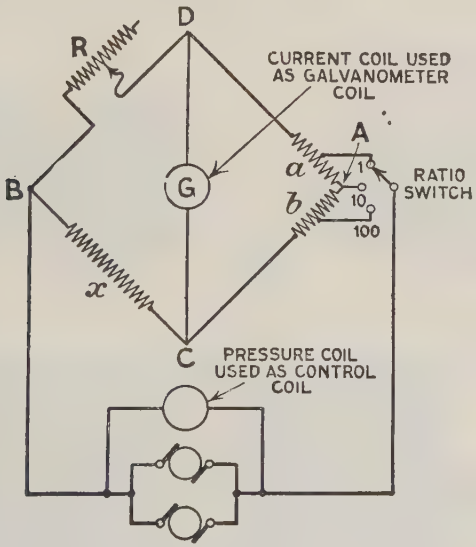

FIG. 79. THEORETICAL CONNECTIONS OF BRIDGE-MEGGER

which should not occur if the handle is turned at a uniform speed slightly in excess of that at which the clutch slips. After the test the condenser should again be short-circuited, and, owing to the high voltage of the megger, it is advisable to use an insulated wire for the purpose.

The Bridge-megger. This instrument with the change-over switch at "Megger," has a range of 1000^{ω} to 20 megohms at 250^{v}, as indicated by the scale reproduced in Fig 76. With the addition of a resistance box connected to the megger, and by turning the switch to "Bridge" the instrument is converted into a

Wheatstone Bridge. The switch places the two windings of the generator armature in parallel, thus reducing the voltage to 125^{v}, but increasing the maximum current which the generator can deliver. The pressure coil is used as the control coil and holds the needle at

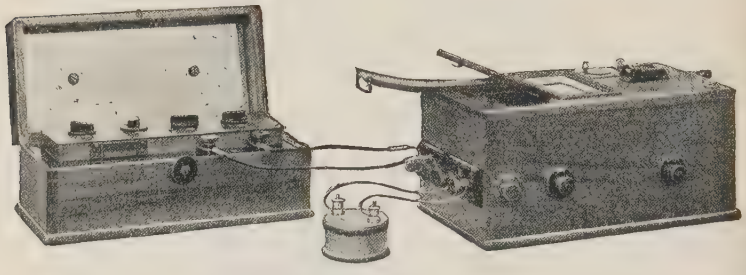

Fig. 80. View of Bridge-megger and Resistance Box

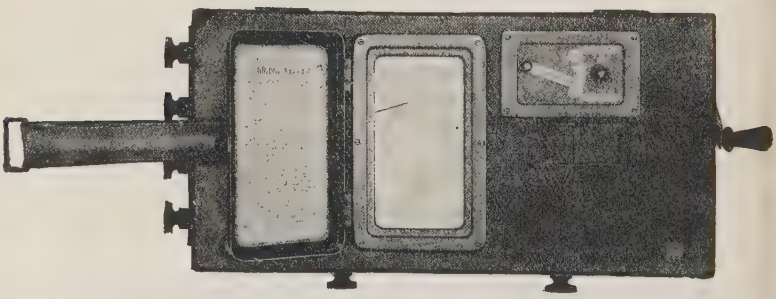

Fig. 81. Plan View of Bridge-megger

infinity when the current coil, used as the galvanometer, carries no current. The ratio arms consist of a resistance with three taps so arranged that the resistance measured is equal to one-tenth of, or one-hundredth of, the resistance inserted in the box, according to the position of the switch. The direct reading resistance box consists of four radial arm rheostats (each with 10 coils) indicating units, tens, hundreds, and thousands. To each radial arm is attached a figure dial

arranged to show, through a window in the top plate, a digit representing the position of the switch. The total resistance is thus given directly as a row of figures. Thus, in Fig. 78 the resistance x is 2714^{ω}. Had the ratio switch been placed at " 100 " the resistance would have been $27{\cdot}14^{\omega}$.

The connections are shown in full in Fig. 78, and in comparing them with the theoretical diagram (Fig. 79) it will be observed that a resistance r is placed in series with the generator and bridge, in order to prevent the current exceeding reasonably safe limits when measuring low resistances.

The general appearance of the apparatus is conveyed by Figs. 80 and 81.

The bridge-megger may be used to measure accurately any resistance from 1^{ω} to 9999^{ω} by the bridge method, and thence by the megger proper to 20 megohms. The advantage gained by dispensing with batteries can scarcely be over-estimated.

PART III. VARIOUS METHODS OF MEASURING RESISTANCE

The choice of the method of measuring a resistance depends upon the value of the resistance, the degree of accuracy required, and upon the apparatus available. For resistances ranging from an ohm or two up to a megohm the Wheatstone Bridge is usually employed. Above this value either a megger or a deflection test is used.

Very Low Resistances.* For resistances of the order of a fraction of an ohm a fall of potential test is usually employed, but as it is seldom necessary in practical telegraphy to determine resistances of this order, it will suffice to say that if the resistance to be measured is placed in series with a standard low resistance (say $\cdot 01^{\omega}$) and a steady current flows through them the differences of potential between the ends of each are proportional to their resistances. The differences may be compared with the aid of a galvanometer of high resistance alternately connected across them or by the potentiometer

* Perren Maycock's *Electric Lighting and Power Distribution*, Vol. I, p. 68, *et seq.*

method. Again, by passing a known current (observed on an ammeter placed in series) and reading the difference of potential across the resistance with a low reading voltmeter. the resistance is obtained by dividing the observed voltage by the current.

Rough Methods. A rough method of measuring ordinary resistances met with in telegraphy consists in connecting a battery, galvanometer, and the resistance to be measured, and observing the resulting deflection, which should be as near the angle of maximum sensitiveness as possible. A rheostat is then substituted for the resistance and the deflection reproduced by introducing resistance into the rheostat. When this has been done the rheostat resistance is equal to the unknown resistance.

With the aid of a differential galvanometer, battery, and rheostat, the unknown resistance may be balanced by the rheostat as is done on a duplex circuit. This method and the substitution method previously described should be regarded only as very rough approximations.

Voltmeter Method. An approximate method which is much used in telephone test rooms consists in the provision of a battery having an E.M.F. of 40^{v} with a tap at 4^{v}, and a voltmeter having a resistance of $10{,}000\omega$ reading from 0 to 4^{v}, and, with the aid of a multiplier, bringing the resistance up to $100{,}000\omega$, also reading 0 to 40^{v}. It is first ascertained that the voltage of the battery (usually of dry cells) is 40^{v}, and the voltmeter is then placed in series with the battery and the resistance to be measured. If the voltmeter with $100{,}000\omega$ shows 20^{v}, the unknown resistance is equal to the voltmeter resistance, the battery resistance being negligible. If the voltmeter shows 10^{v}, the resistance under measurement is $300{,}000\omega$. With a 4^{v} battery and $10{,}000\omega$ voltmeter resistance, a deflection of 2^{v} corresponds to $10{,}000\omega$ and 1^{v} to $30{,}000\omega$. With the aid of a $\frac{1}{10}$ shunt (1111ω) on the voltmeter 2^{v} corresponds to 1000ω, and 1^{v} to 3000ω. Measurements may be made on this principle with a Detector No. 2 and the 40^{v} secondary cell lead, the unknown resistance is then $\left(\frac{40}{V} - 1\right) \times 5000\omega$, or with a 4^{v} battery $\left(\frac{4}{V} - 1\right) \times 500\omega$ where V is the reading of the detector in volts.

Direct Deflection Method. For the measurement of extremely high resistances a high resistance reflecting galvanometer provided with shunts, a megohm standard resistance, and a battery are required. With the battery, megohm

resistance, and the galvanometer (shunted $\frac{1}{100}$) in series, to facilitate the calculation of the result, a deflection of 100 divisions is obtained by adjusting the controlling magnet. Neglecting the resistance of the battery and galvanometer, it may be assumed that the same deflection would have been obtained through 1000 megohms with the galvanometer unshunted, and that a deflection of 1 division would be obtained through a resistance of 100,000 megohms. Now if the battery and galvanometer be connected to the resistance to be measured, its resistance will be $\frac{100{,}000}{\text{deflection}}$ megohms. If shunts have to be employed the result is divided by the power of the shunt used.

The accurate formula is—

$$x = \frac{d_1}{d_2}\left\{\frac{G+S}{S}(R+B)+G\right\}-(G+B)$$

where d_1 is the constant,

d_2 is the observed deflection,

G, S, R and B are respectively the resistances of the galvanometer, shunt, resistance coil and battery.

In taking the insulation resistance of cables all quantities save the multiplying power and the resistance coil may be neglected.

PART IV. BATTERY TESTING*

Measurement of E.M.F. When the highest accuracy is required in measuring the E.M.F. of a cell either the potentiometer or Rayleigh's compensation method, both of which involve the use of a standard cell, are invariably employed. But, for all ordinary purposes a voltmeter of high resistance with a suitable range of measurement, such as the Weston pattern described on page 147, may be used. It is then merely necessary to join up the cell to the voltmeter and read the E.M.F. in volts indicated by the pointer. With this instrument the E.M.F. of any battery having an E.M.F. of 150^{v} or less may be measured with a considerable degree of accuracy. The No. 2 or No. 4 Detectors (page 116) may be used instead of the Weston

* In earlier editions of this work a number of methods of measuring battery resistance and E.M.F. were described, but none of those now omitted are in general use. Kempe's *Handbook of Electrical Testing* contains full descriptions of every possible test.

voltmeter. Their general construction is more robust, but the scales less finely divided, and, whilst they do not give such accurate results as the Weston instrument their indications are quite sufficient for most practical purposes.

THE MEASUREMENT OF INTERNAL RESISTANCE

Voltmeter Shunt Method. The internal resistance of a cell or battery can readily be ascertained by measuring, with a voltmeter, (i) the E.M.F. of the cell or battery, and (ii) the difference of potential across its terminals when joined by a low resistance of known value (*vide* page 60). These measurements may be effected with reasonable accuracy with the aid of a Detector No. 2.

Calling E the E.M.F. of the battery, V the difference of potential across its terminals when joined by a resistance of S ohms, the internal resistance r is—

$$r = S \times \frac{E - V}{V}$$

Wheatstone Bridge Method. Another method of measuring the internal resistance of a battery is to divide it into two halves and join these two halves up so that their E.M.F.'s oppose. The battery is then joined up to a Wheatstone Bridge in the ordinary way and measured like a simple resistance, but both directions of current must be employed. The resistance of the battery is then equal to the square root of the product of the resistances required to balance in the two cases. The method is one of considerable accuracy.

Resistance of Secondary Cells. The resistance of a secondary cell or battery cannot conveniently be measured by any of the methods just described, owing to the extremely small resistance and very large currents to be dealt with. A fairly accurate test may, however, be made with the aid of a voltmeter and an ammeter. The battery is connected through the ammeter to a discharge tank, the resistance of which is adjusted until a current equal to maximum rate of

discharge is obtained. The P.D. across the terminals of the battery is then taken, and, leaving the voltmeter connected the external circuit is broken and the voltmeter again read.

EXAMPLE. A voltmeter connected across the terminals of a secondary battery indicated 22·6 volts when the current passing was 150 amperes and 23·1 upon open circuit. What is the internal resistance of the battery ?

$$\text{E.M.F. lost in battery} = 23{\cdot}1 - 22{\cdot}6 = {\cdot}5^{\text{v}}$$

$$R = \frac{E}{C} \therefore \text{ internal resistance} = \frac{{\cdot}5}{150} = {\cdot}0033^{\omega}$$

Post Office Standard Test for Primary Cells. The E.M.F. of any cell is higher immediately after a period of rest than the mean value during the time it is supplying a current. The extent to which the E.M.F. falls during the discharge is determined by the value of the current and the state of exhaustion of the depolarizer. As indicated on page 24 in the case of the simple cell the E.M.F. fell very rapidly. With Leclanché cells charged with granular manganese dioxide, the fall in E.M.F. during the first few minutes is also very rapid unless the current rate is very low. Conversely, the rate of recovery of the same cell, during a period of rest, is rapid. Hence, tests taken of the E.M.F. of a Leclanché cell should be so designed that regard is paid to the conditions under which the battery is to be applied. If it be applied for the purpose of ringing an ordinary bell for very brief periods with reasonably long intervals of rest the E.M.F. measured during periods of rest may be considered approximately the mean E.M.F. during a period of discharge. On the other hand, if the battery be applied for a continuous period of some length, the value of the mean working E.M.F. will be very much less. A few examples quoted from the researches of J. G. Lucas will make this clear.

Two new granular Leclanché cells measured 3·1^{v} when first placed upon a circuit arranged so that a current of 80 mA was flowing. Five minutes later the E.M.F. had fallen to 2·7^{v}, and

at the end of 30 minutes the E.M.F. had fallen to 2·5^{v} ; upon disconnecting the battery the E.M.F. rose in five minutes to 2·75^{v}, and at the end of 30 minutes it measured 2·9^{v}.

Comparison of E.M.F.'s of Granular and Powdered MnO_2 Cells

Conditions	Granular MnO_2 cells E.M.F.	Powdered MnO_2 cells E.M.F.
E.M.F. when newly made up . . .	3·1	3·05
,, after 5 minutes' discharge at 80 mA	2·7	2·95
,, ,, 30 minutes' discharge at 80 mA	2·5	2·9
,, ,, 5 minutes' rest . . .	2·75	—
,, ,, 30 minutes' rest . . .	2·9	—
Both cells were then discharged until their E.M.F.'s had fallen to one volt per cell.		
E.M.F. after a 17 hours' rest . . .	2·6	2·2
,, ,, 7 minutes' discharge at 70 mA	2·0	—
,, ,, 5 minutes' discharge at 70 mA	—	2·0
,, ,, 30 minutes' discharge at 70 mA	1·6	1·925
,, ,, 2 months' rest . . .	2·9	—
,, ,, 7 minutes' discharge . .	2·3	—
,, ,, 30 minutes' discharge . .	1·85	—

The tests now applied by the Post Office for primary cells are first to measure the E.M.F. of a cell after a period of rest, then to shunt the battery by a resistance of two ohms per cell for one minute and, after removing the shunt, immediately to note the value to which the E.M.F. has fallen. The cell is rejected if the latter value is below 1^{v} for Leclanché cells. This test gives also the internal resistance of the cell.

In order to simplify these tests a set of resistance coils with a connection key termed a " Coil Testing No. 1 " (Fig. 82) is used. This contains six coils having resistances of 2ω, 2ω, 6ω, 10ω, 20ω, and 4960ω. The terminal 1 and the terminal providing a resistance of 2ω per cell are joined across the battery to be tested with the 5^{v} or 50^{v} coil of the detector as required. Three voltage readings are then taken as follows—

1. The voltage indicated on joining up the detector.

2. The testing coil key is depressed and the voltage read immediately.

3. The testing coil key is kept depressed for one minute and the voltage read immediately the key is released.

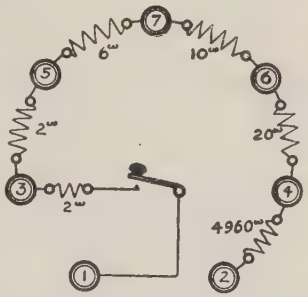

FIG. 82. COIL TESTING No. 1

If the voltage reading (3) is less than 1^{v} per cell for Leclanché or dry cells, or if the voltage reading (2) is less than half of voltage reading (1) for Leclanché 0 or No. 1 cells, or less than voltage reading (1) divided by three for Leclanché No. 2A cells, then each cell should be tested separately.

For this purpose the 2^{ω} coil and 5^{v} winding of the Detector No. 2 should be used, and the three voltage readings taken as previously described. If voltage reading (3) is less than 1^{v} the depolarizer needs renewal. If voltage reading (3) is above 1^{v} and reading (2) is less than $\frac{1}{2}$ or $\frac{1}{3}$ of reading (1), the excitant should be renewed and the cell cleaned out.

CHAPTER VI

CAPACITY AND CONDENSERS

Condensers. A condenser consists essentially of two conductors separated by an insulating material termed, in this connection, the dielectric. The capacity of the condenser is the value of its charge or the quantity of electricity with which it is charged by unit potential difference (page 178). A condenser having a capacity of one farad would, therefore, be charged with one coulomb of electricity if a difference of potential of one volt existed between its terminals.

Capacity. In order to appreciate the effects and behaviour of capacity generally, it is necessary to consider carefully the fundamental difference which exists between a conductor and an insulator. The former permits the passage of a continuous electric current through it, whilst the latter does not. Now the creation of a difference of potential between the two sides of an insulator (e.g. a slab of paraffin wax) produces an electric strain through it. In the case of the lightning protector it is clearly demonstrated (Chapter XXI) that a large potential difference produces so great a strain upon the layer of air between the plates that the air breaks down, and a disruptive discharge occurs. Again, it is well known that a Leyden jar may be broken into fragments by applying a sufficiently large difference of potential. The creation of a difference of potential between the sides of the slab of wax produces a strain, and a current flows into the dielectric at one side, and a current of equal value flows out at the other. This current ceases when the backward pressure of the dielectric is equal to the forward pressure of the battery; in other words, when the backward E.M.F. of the condenser is the same as that of the battery.

Hence, the condenser is said to be charged to the voltage of this battery. If the battery is removed and the terminals of the condenser are connected by a conducting path, the strain will relieve itself by discharging the quantity of electricity whose admission gave rise to the state of strain. This discharge is a current from the positive to the negative electrode of the condenser through the conducting path substituted for the battery.

Electrostatic Lines of Force. The lines along which electric strains occur are termed electro-static lines of force, and a definite numerical value is assigned in a similar manner to that given to magnetic lines of force. A static line of force begins upon a conductor of higher potential and ends upon one of lower potential. In the case of a charged condenser they extend from plate to plate, and serve to mark out the direction of the electric strain and by their number express its value. There is a tension along their length, and they always endeavour to shorten themselves by an attracting pull between the two conductors to which they are attached. Parallel lines of force of similar direction exert a lateral repulsion from each other.

Dimensions of Condensers. The capacity of a condenser depends upon its dimensions and the material of which the dielectric is composed. With a given thickness of dielectric between two metal plates of equal size the capacity is directly proportional to the area of either plate. The reason is that in doubling the area of the plates the area of dielectric strain is doubled, and, therefore, since the difference of potential is the same between every part of the one plate and every part of the other plate, the quantity of electricity stored is doubled.

By doubling the thickness of the dielectric the capacity is halved if the size of the plates is unaltered. This is due to the greater stiffness of the thicker dielectric to an electric strain.

Specific Inductive Capacity. If a number of condensers are constructed of precisely equal dimensions, but with different materials as dielectric, it will be found that their capacities will also differ to a considerable extent, the condenser in which the plates are separated by air having the smallest capacity. The values of the capacity obtained with the various materials substituted for the air dielectric are, therefore, stated relatively to the capacity of the air condenser, which is taken as unity. Since the *relative* capacities are always the same for the various materials, provided the condensers are of equal dimensions, the numerical values refer solely to the dielectric material. The numbers are those by which the capacity of an air condenser must be multiplied in order to obtain the capacity of the condenser when the material in question is substituted for air. The number assigned to each substance is termed its specific inductive capacity, or, briefly, its specific capacity.

The values of the specific capacities of a few materials commonly employed are given below—

Material	Specific capacity
Air	1
Paraffin (solid)	1·9 to 2·3
Paraffined paper	2·8
Shellac	3 to 3·5
India-rubber	2·12 to 2·69
Sulphur	2·8 to 3·8
Ebonite	1·9 to 3·5
Gutta-percha	2·462
Mica	5 to 8
Glass	6·72 to 9·9

The capacities of two copper wires of equal diameter and length covered with equal thicknesses of gutta-percha and vulcanized india-rubber respectively will, if submerged, have relative values in the ratio of 2·462 to 2·69 (vulcanized rubber).

The capacity of a plate condenser varies directly as the area and specific capacity and inversely as the thickness of dielectric strained. Three metal plates separated by two dielectric slabs will give twice as great a capacity between the centre and the two outer plates as two sheets of metal separated by a single dielectric slab. The three-electrode condenser is clearly equivalent to two two-plate condensers joined together, thus doubling the area of dielectric strained, but with the same potential difference applied throughout. The capacity in microfarads of a condenser with two equal plates separated by a single sheet of dielectric is approximately—

$$\frac{a \times k}{t} \times \cdot 000,000,2246$$

where a is the area of dielectric strained, i.e. the area of either metal plate, k is the specific capacity of the dielectric, and t its thickness in inches*.

Condensers in Parallel and Series. Condensers may be joined up in two different ways, viz. in parallel and in series, or cascade as it is sometimes termed. The latter method is very seldom if ever used in telegraphy, but it has a definite sphere of utility which wi l be apparent when the question of joint capacity has

* The formula is obtained as follows—

$$K \text{ (absolute electro-static units)} = \frac{ak}{4\pi t}$$

1 absolute electro-magnetic unit of capacity $= v^2$ static units where v is numerically equal to the velocity of light, viz. 3×10^{10} cm. per second.

10^{15} m.f. = 1 absolute electro-magnetic unit of capacity.

$$\therefore K \text{ in m.f.} = \frac{ak \times 10^{15}}{t \times 4 \times 3{\cdot}1416 \times 3^2 \times 10^{20}}$$

$$= \frac{88{\cdot}42\, ak}{t \times 10^9} \text{ where } a \text{ and } t \text{ are in cm.}$$

$$= \frac{88{\cdot}42 \times 2{\cdot}54^2 \times ak}{t \times 2{\cdot}54 \times 10^9} \text{ where } a \text{ and } t \text{ are in inches.}$$

been considered. The two methods are illustrated in Figs. 83 and 84.

When condensers are connected in parallel it will be quite evident that the effect is to increase the area of dielectric subjected to strain, and, therefore, that the resultant or joint capacity of the combination is obtained by adding their capacities together. In the case

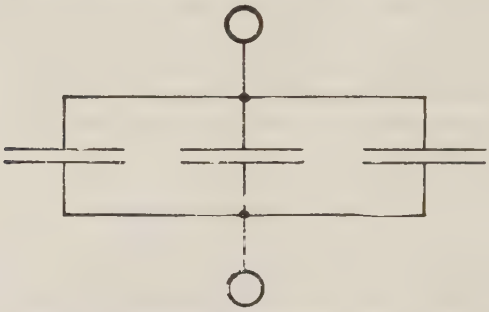

Fig. 83. Three Condensers in Parallel

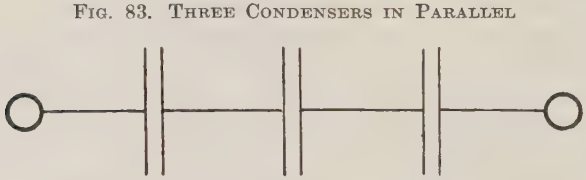

Fig. 84. Three Condensers in Series

illustrated, in Fig. 83, if the respective capacities are 5 m.f., 2 m.f., and 1 m.f., the joint capacity is $5 + 2 + 1 = 8$ m.f.

Three condensers are depicted in Fig. 84 joined in series or cascade, and the joint capacity is then less than that of the smallest condenser. This is due to the greater thickness of dielectric interposed between the two extreme outside plates, since each condenser placed in series interposes the thickness of its dielectric in the direction of the electric strain.

The joint capacity of condensers in series is ascertained in the same manner as that of the resistance of

circuits placed in parallel. It is equal to the reciprocal of the sum of the reciprocals of the separate capacities. Taking the same values as before, viz. 5 m.f., 2 m.f., and 1 m.f., respectively—

$$\text{Joint capacity} = \frac{1}{\frac{1}{3} + \frac{1}{2} + \frac{1}{1}} = \frac{10}{17} \text{ m.f.}$$

In the case of two condensers placed in *series* the above rule may be simplified in the same way as that for two circuits in *parallel*, viz. that the joint capacity of two condensers in series is equal to their product divided by their sum. Similarly, if condensers of equal capacity are connected in series the joint capacity is equal to the capacity of one of them divided by their number.

EXAMPLE. (*a*) What will be the joint capacity obtained by connecting a condenser of 5 m.f. in series with one of 3 m.f. capacity ? (*b*) Find the joint capacity of five 2 m.f. condensers joined in series.

$$(a)\ \frac{5 \times 3}{5 + 3} = 1\tfrac{7}{8} = 1{\cdot}875 \text{ m.f.}$$

$$(b)\ \frac{2}{5} = {\cdot}4 \text{ m.f.}$$

Dielectric for Condensers. The choice of materials for use as dielectric in telegraph condensers is extremely limited. Glass is too fragile for use in extremely thin sheets, and by sufficiently increasing the thickness, the size and cost of the condenser are enormously enhanced. Gutta-percha can be made in very thin sheets, but unless kept under water it rapidly becomes hard and brittle. Mica would certainly be an ideal substance, were it not for the fact that its cost prevents its use in any but standard condensers. For telegraph purposes paraffined paper is exclusively employed.

Condensers Used in Telegraphy. Formerly, telegraph condensers were built up of alternate sheets of paraffined

paper and tinfoil, two sheets of paper being used to separate the adjacent sheets of tinfoil. The two top corners of every paper were cut off, but only one corner of each foil was removed. As the foils were laid alternately with their whole corners in opposite directions, it will be obvious that the corners of foils 1, 3, 5, 7, etc., projected beyond the papers upon the one side, whilst foils 2, 4, 6, 8, etc., projected upon the other, thus affording a simple and obvious method of connection. The whole series was held in position by two iron plates of rather larger size than the paper and securely bolted together at the corners.

The method of condenser manufacture invented by G. F. Mansbridge is now used by the Post Office. The process is much cheaper and consists in the use of the material known as "tinfoil paper," in place of the metallic foil and plain paper previously employed. The tinfoil paper for making condensers is prepared in the form of continuous reels, and the process of making a condenser plate consists simply in winding into the form of a flat roll two strips of this paper, each strip being perhaps 30 ft. long, the precise length depending; of course, upon the capacity of the plate required. The tinfoil paper, which is somewhat similar to the paper used commercially for wrapping up packages of tea, etc., is prepared by pasting tin which has been reduced by chemical processes to a state of extremely fine subdivision, upon one side of a thin "body paper." To render this coating of tin paste practically continuous, and to improve its electrical conductance, the prepared paper is subjected in the course of manufacture to a calendering process, which consolidates and burnishes the minute particles of tin, and firmly fixes the metal to the body paper. It will be obvious that when two spirals of such paper are rolled up together the thin film of tin on one spiral will be separated from that of the other spiral by means of the paper which forms the dielectric.

In order to obtain very high insulation, and to increase the dielectric strength it is usual to interleave between the strips of tinfoil paper a strip of thin plain paper, i.e. two strips of tinfoil paper, and two strips of plain paper are arranged alternately and rolled up together. The coating of tin on the tinfoil paper is so extremely fine that it would not be possible to make a soldered electrical connection to it, consequently the " lugs " by which contact is maintained consist of strips of thin metal foil laid between the foiled surfaces and the interleaving paper, separate lugs being, of course, used for the two foiled surfaces. After being removed from the winding machine the rolled strips are thoroughly desiccated by prolonged heating at a temperature of about 200° F., and the last traces of moisture are then extracted by means of desiccation under vacuum. When thoroughly dry and still in vacuo, hot paraffin wax is allowed to flow into the vacuum pan, and, after the plates have soaked for some hours so that the wax may thoroughly penetrate the pores of the paper, the vacuum is broken, the wax is drained off, and the plates are then taken out and put under considerable pressure until cold. They are then tested for capacity and insulation. The value of the capacity is adjusted by peeling off some of the outside layers to reduce the capacity, or by re-soaking the plate and subjecting it to a greater pressure to increase the capacity.

The standard plate is of the 2 microfarad size, and this contains 21 sq. ft. of surface to each electrode.

The dimensions of a finished 2 m.f. plate are $7\frac{1}{2}$ in. $\times$ $4\frac{1}{2}$ in. $\times$ $\frac{1}{2}$ in. thick, and its average weight is 13 oz. The specific inductive capacity of the paraffined paper may be taken at 2·8. Calculations made from a condenser constructed of " tinfoil paper " would give results somewhat higher than this figure, due to the fact that the effective thickness of the body paper is less than its apparent thickness owing to the particles

of tin being so thoroughly driven into the pores of the paper in the process of manufacture. The insulation resistance obtained from a condenser depends upon many details of manufacture, and also upon the conditions under which the test is made, particularly as regards temperature. It is hopeless to look for high insulation unless the last traces of moisture have been

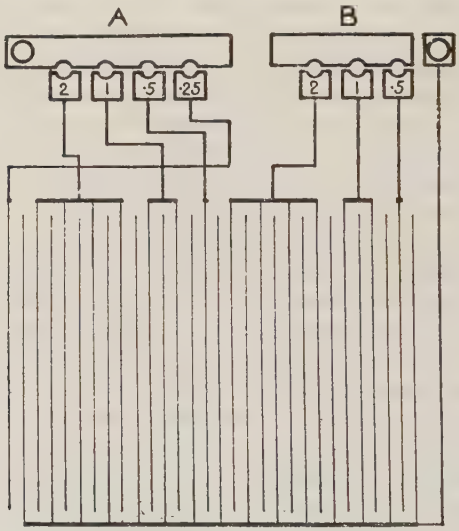

Fig. 85. Arrangement and Principle of $7\frac{1}{4}$ m.f. Condenser

removed from the paper, and unless the paraffin wax and the paper are of the highest quality.

It should be added that the whole arrangement is firmly clamped between iron plates in precisely the same manner described in the case of the older type of condenser.

The connections and external appearance of the $7\frac{1}{4}$ m.f. condenser are shown in Figs. 85 and 86. It is divided into two sections in order that it may be used in place of the two separate condensers which

would otherwise be required upon long duplex and other circuits. The seven section lugs are connected to condenser plates of the capacities indicated in Fig. 85. Capacity is inserted by plugging the main and section bars together. To obtain the full capacity $7\frac{1}{4}$ m.f. *A* and *B* are joined together and all the plugs inserted so as to connect all the plates of the condenser together.

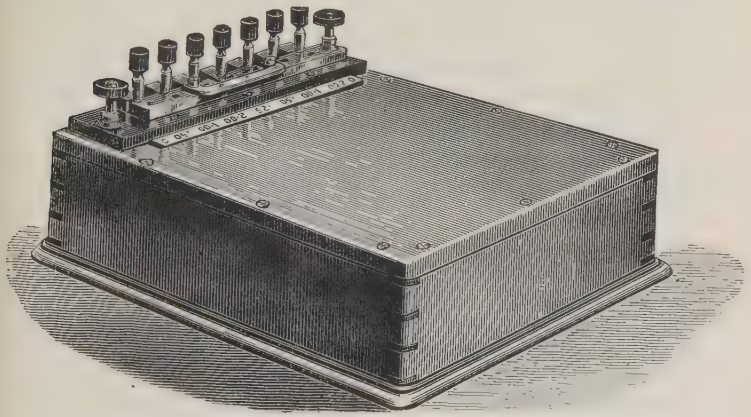

FIG. 86. $7\frac{1}{4}$ M.F. CONDENSER

For telephone purposes condensers are made up in metal cases of various sizes, for example, the "Condenser MC No. 30" is $4\frac{3}{8}$ in. $\times$ 1 in. $\times$ $1\frac{5}{8}$ in. with a capacity of 2 m.f. It is furnished with two soldering tags and can be mounted on a strip by means of a "Clip No. 7."

Insulation of Condensers. Immediately the insulation of a condenser fails it becomes a mere resistance and incapable of holding a charge.

For use upon cable circuits condensers of far larger capacity and divided into three sections are frequently employed. This point is, however, dealt with in connection with duplex circuits.

Specification of Insulation and Capacity. The temperature coefficient of the insulating materials being

very high, a standard temperature must necessarily be decided upon, and this in the case of condensers is usually 60° F. At this temperature, and with a pressure of 400 volts, the minimum insulation of a new condenser according to the Post Office specification is 1000 megohms per microfarad, the insulation being measured after one minute's "electrification," i.e. the reading upon which the insulation is to be calculated is observed at precisely one minute after the battery is first applied to the condenser (see page 167). It is necessary to be precise upon this point as the electrification of a good paraffined paper condenser is very considerable. As compared with that during the first minute there is, however, very little subsequent electrification.

The insulation of a $7\frac{1}{4}$ m.f. condenser after one minute's electrification would, at 60° F., have to be at least 138 megohms.

The capacity of telegraph condensers is correct to 5 per cent above or below their nominal values.

Condenser Discharge. The discharge of a condenser when employed in ordinary telegraphy is always accomplished by a flow of current from the positive to the negative side of the condenser through the circuit connecting them. If, however, the resistance and inductance of the discharging circuit are extremely low and bear a certain relation* to the capacity of the condenser, the discharge becomes oscillatory. This phenomenon plays a vitally important part in wireless telegraphy, and it may best be explained by analogy. Take a flat piece of whalebone 3 in. or 4 in. in length, and clamp one end in a suitable hand-vice. If the whalebone is deflected and suddenly released it will vibrate backwards and forwards past its normal position of rest, but the amplitude of its vibration will grow gradually less and less until finally all vibration ceases. This experiment is supposed to have been made in air, and it is the friction between the moving whalebone and the air which finally brought the whalebone to rest. Let the same experiment be repeated, but with the whole arrangement immersed

* The discharge is oscillatory if the ohmic resistance of the discharging circuit is less than the square root of four times the inductance in henrys divided by the capacity of the condenser in farads.

in treacle. When the spring is pulled aside and released it will slowly return to its normal position without oscillation, because the frictional resistance is too great for such to occur. In this analogy the spring corresponds to the charge of the condenser, and the medium in which it dissipated its energy to the external circuit through which the condenser is discharged. If the resistance and inductance of the circuit are small, the charge swings backwards and forwards, first from the positive to the negative side, and in overshooting its mark makes the formerly negative side positive, and the formerly positive side negative. This results in a discharge in the reverse direction, which again overshoots the mark, and makes the formerly positive side again positive. This oscillatory current continuously diminishes in magnitude until, finally, it dies away altogether.

OTHER ELECTRICAL UNITS

From the three units of current, E.M.F., and resistance, units of quantity of electricity and of capacity may readily be derived.

THE COULOMB *is the unit of quantity of electricity and may be defined as the quantity of electricity which would pass any given point in a circuit carrying an unvarying current of* 1 *ampere in* 1 *second.*

THE FARAD *is the unit of capacity and represents the capacity of a condenser which at a pressure of* 1 *volt would be charged with* 1 *coulomb of electricity.*

Relationships analogous to Ohm's Law exist between E.M.F., quantity, and capacity. They are—

$$\text{Difference of potential} = \frac{\text{quantity}}{\text{capacity}}$$

$$\text{Capacity} = \frac{\text{quantity}}{\text{difference of potential}}$$

$$\text{Quantity} = \text{difference of potential} \times \text{capacity.}$$

If a condenser of ·001 farad capacity has a charge of ·2 coulomb the difference of potential across its terminals is $\frac{\cdot 2}{\cdot 001} = 200$ volts.

As an example of the second relation, suppose that the quantity of electricity in a condenser is ·01 coulomb, whilst

the difference of potential across its terminals is 50 volts. The capacity is then $\frac{\cdot 01}{50} = \cdot 0002$ farad.

The third form of the relation is illustrated by ascertaining the charge in a condenser of, say, ·00002 farads capacity, due to the application of an E.M.F. of 50 volts. It is $50 \times \cdot 00002 = \cdot 001$ coulomb.

The values of the capacity chosen in these examples have been extremely small fractions of the unit, the

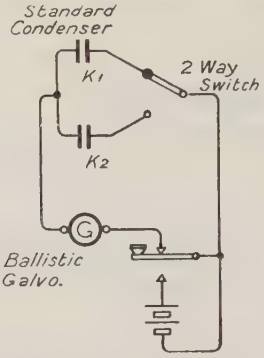

Fig 87. Measurement of Capacity—Direct Deflection Method

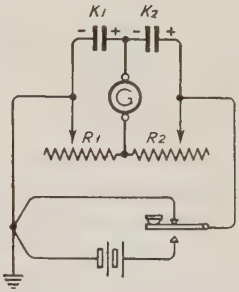

Fig. 88. Measurement of Capacity—Gott Method

farad, but even these fractions are far larger than are met with in the case of long aerial or even short underground circuits, consequently a subdivision of the farad, the microfarad, is employed in practice. It is equal to one-millionth part of 1 farad, and is usually denoted by the affix " m.f."

One microfarad is the capacity of about 15·4 miles of paper core cable loop. It is the average capacity of about 101 miles of 300 lb. copper loop erected upon poles.

Measurement of Capacity. A direct measurement can be made with a ballistic galvanometer and a small battery by comparing the throws given by a condenser

of known capacity and that of the condenser to be measured (Fig. 87). This method is approximate only. The galvanometer may be shunted provided the same shunt is used for both tests. It may not be assumed that the deflections with two different shunt values are comparable by using the multiplying power of the shunts. The deflection or first throw of the spot is proportional to the quantity of electricity discharged through the galvanometer. Hence

$$K_1 : K_2 :: d_1 : d_2.$$

The Gott method is generally to be preferred and does not require the use of a ballistic galvanometer. The two condensers to be compared are charged with equal quantities of electricity by using suitable potentials. When the equally charged condensers discharge, there is no flow of electricity through the galvanometer.

Two variable high resistances in series are connected to a battery on depression of the key. The potentials across R_1 and R_2 are proportional to the resistances, hence the quantities of electricity ($V \times K$) in the condensers are similarly proportional to $R_1 \times K_1$ and to $R_2 \times K_2$. When on releasing the key the galvanometer is unaffected,

$$R_1K_1 = R_2K_2, \text{ i.e. } K_1 = \frac{R_2}{R_1} K_2$$

CHAPTER VII

THE INDUCTION OF E.M.F. AND ALTERNATING CURRENTS

INDUCED E.M.F.

An E.M.F. is induced in any conductor which cuts a magnetic field in such a manner that the number of lines passing through the conductor is varied. If, for example, a magnet is plunged into a solenoid, the magnetic lines of force cut through the windings of the solenoid and an E.M.F. is thereby generated. This E.M.F. is of momentary duration and exists only whilst the lines are cutting the conductors. In Fig. 5 the relation between the directions of the current and the resulting magnetic field is indicated. If the battery is short-circuited, the effect of plunging the north pole of a bar magnet into the coil is to generate an E.M.F. opposite in direction to that of the battery (see Fig. 89). When the magnet is pulled out an E.M.F. in the opposite direction results. Experiment will show that the direction of the induced current depends upon the direction of the magnetic field, and on whether the variation is an increase or a decrease of the number of lines cutting or threading the conductors.

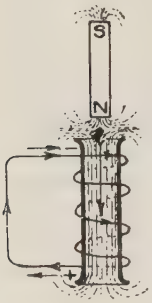

Fig. 89. Induction of Current

Fleming's Right-hand Rule. The relation between the direction of motion, direction of the magnetic field, and the direction of the induced E.M.F. can best be stated by the use of Fleming's rule. The thumb, first finger, and second finger of the right hand are held at right angles to each other like the three boundary lines at the corner of a cube. The first finger points in the

direction of the magnetic field N. to S., the thumb the direction of the motion, and the second finger then points out the direction of the induced current (Fig. 90).

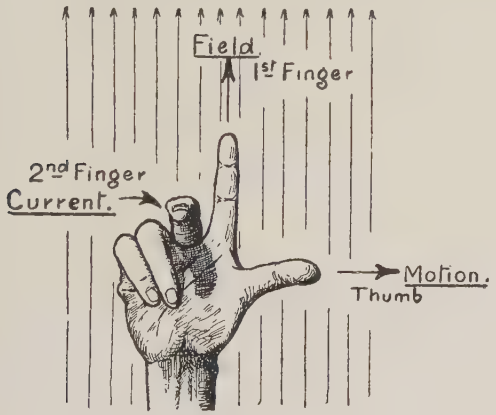

Fig. 90. Right-hand Rule showing Relation between Field, Motion, and Induced Current

The rule may be memorized by the following mnemonic—

thu*M*b . . .	Motion
*F*irst finger . . .	Force
se*C*ond finger . .	Current

The application of this rule to a generator will be quite obvious.

Value of Induced E.M.F. The intensity of the induced E.M.F. is directly proportional to the rate of change of the number of lines of force cutting the conductor (i.e. total number of lines cutting divided by the time of cutting in seconds). The E.M.F. generated in the solenoid depends, therefore, upon the rapidity of the motion of the magnet. These facts may be summarized by saying that an E.M.F. is induced when the

number of lines of force threading or cutting a conductor is varied and that the direction of the E.M.F. depends on the direction of the cutting. The value of this E.M.F. depends upon the rate of cutting and is equal to the total number of lines cutting the conductor per second. If the lines cut several conductors so arranged that the E.M.F.'s generated are added together, as is the case, say, with a coil of wire, the E.M.F. is then proportional to the total lines cutting multiplied by the number of conductors cut by these lines per second.

Unit E.M.F. is generated between the ends of a conductor of unit length (1 cm.) which cuts unit magnetic field (1 line per sq. cm.) at unit velocity (1 cm. per second); i.e. unit E.M.F. is set up when a conductor cuts 1 line per second. This unit E.M.F. is the C.G.S. electro-magnetic unit, the volt being equal to 10^8 such units. Hence, the E.M.F. in volts generated in any conductor is equal to the total number of lines cut divided by the time occupied and by 10^8.

EXAMPLE. A four-pole charging generator has 70 armature conductors, a flux of 1,000,000 lines passing from each pole to the armature, which revolves at 1000 revolutions per minute. What is the E.M.F. generated?

Number of times flux cut per revolution $= 4$

$$\text{Revolutions per second} = \frac{1000}{60}$$

$$\text{E.M.F.} = \frac{\text{No. of conductors} \times \text{flux} \times \text{times cut per sec.}}{100{,}000{,}000}$$

$$\therefore \text{E.M.F.} = \frac{70 \times 1{,}000{,}000 \times 4 \times 1000}{60 \times 10^8} = 47^{\text{v}} \text{ approx.}$$

Lenz's Law. This law states that the induced currents always flow in such a direction that the magnetic effects they produce oppose the motion to which they owe their origin. Applying this law to the case of Fig. 89, the induced current is, therefore, in such a direction as to make the lower end of the solenoid of S polarity in opposition to the N polarity of the inserted magnet. Since an electric current represents a

certain amount of energy, consideration will show that, to make any motion generate electrical energy must necessarily involve the expenditure of mechanical energy at least equal to the electrical energy resulting from that motion. The mechanical energy required to drive a dynamo is necessarily somewhat greater than the resulting electrical energy, owing to losses in the form of heat inseparable from the process of converting mechanical into electrical energy.

Induction Coil and Transformer. If an electro-magnet is inserted in a solenoid and a current is passed through the electro-magnet and the circuit is then broken, the conditions produced are similar to the insertion and withdrawal of a permanent magnet. This is illustrated in Fig. 91, where, by starting a current in the inner or inducing winding, usually termed the primary winding, a current in the opposite direction is induced in the outer or secondary winding. On breaking the primary circuit the magnetic field collapses, and thus cuts the windings in the opposite direction to that in which it cuts them in springing into existence, so generating an E.M.F. opposite to that shown by the arrow heads in Fig. 91. An increase in the current in the primary produces an E.M.F. in the opposite direction in the secondary, whilst a current decrease produces an E.M.F. in the same direction as the primary or inducing current.

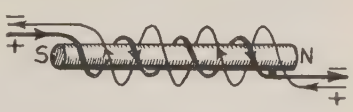

FIG. 91. PRINCIPLE OF INDUCTION COIL

An induction coil or transformer consists essentially of an electro-magnet with an outer winding. If the two windings have an equal number of turns of wire, then the E.M.F. induced in the secondary is equal to that applied to the ends of the primary. When the number of turns is unequal, the E.M.F. applied to the primary is in the same proportion to the induced E.M.F. as the primary turns are to the secondary turns. Thus, if it is desired to produce an E.M.F. of 100^{V} by applying 10^{V} to the primary, the secondary must have ten times as many turns as the primary. Similarly, if the secondary had only one-tenth as many turns as the primary, the induced E.M.F. would be one-tenth of the inducing E.M.F. For steady currents in the primary the effects are only of momentary duration in the secondary.

Induction coils and transformers are employed to step up fluctuating currents to higher voltages. Such transformations involve losses due to ohmic resistance, hysteresis and eddy currents, and therefore the energy available in the secondary circuit is always somewhat less than that applied in the primary. In the case of transformers the efficiency is usually well over 90 per cent, but in induction coils it is much less—often little over 60 per cent.

It should be realized that with a step up transformer having a theoretical efficiency of 100 per cent, the current induced in the secondary circuit is much less than the current in the primary producing that current. A transformer with an alternating current of 100 amperes at 200 volts in the primary and 2000 volts in the secondary will have a secondary current of 10 amperes. (These figures are modified by the actual efficiency in a practical case.)

The loss of energy is, of course, the difference between the input and the output energy. This lost electrical energy is dissipated in heat and large electric light and power transformers are specially designed so that the heat thus generated is absorbed or radiated by cooling arrangements. In transformers used in telegraphy or telephony the energy values involved are, of course, too small to produce appreciable quantities of heat, but nevertheless, this is the channel by which the lost energy is absorbed.

Mutual Induction. The mutual induction of two coils is defined as the total flux which passes through one of the coils when the other is traversed by the C.G.S. unit of current. As with self-induction the practical unit is the henry, and is equivalent to stopping or starting a flux of 10^9 lines through the circuit. For any given pair of coils the mutual induction is a constant quantity, provided that there is no iron with its variable permeability in the magnetic circuit. If the current in one coil increases or decreases uniformly at the rate of 1 ampere per second an E.M.F. of 1 volt is generated in the other coil if the coefficient of mutual inductance is one henry. Adequate discussion of mutual induction is not possible in the present volume and the definitions have only been given to complete the series.

Self-induction. Wherever a current exists there is a magnetic field. The field is the result of the current, and in coming into existence it cuts through the current-conveying conductors to which it owes its origin. Now, wherever a magnetic field cuts a conductor, or

vice versa, an E.M.F. is generated. Imagine a battery or other source of E.M.F. applied to a coil of wire such as that shown in Fig. 91. The current does not instantly attain its full value, since its rise is opposed by the E.M.F. generated by the lines of force cutting through the conductors. This opposing E.M.F. is termed the " back E.M.F." of self-induction. If, now, the coil and battery are short-circuited, a current will flow through the circuit in the same direction as the original battery current. This is caused by the collapse of the lines of force which, in so doing, cut through the conductors in the opposite direction. Hence, self-induction tends to oppose the growth of currents and to retard the dying away of currents.

The HENRY is the unit of inductance, and represents *the inductance of a circuit in which a counter E.M.F. of* 1 *volt is generated when the value of the current changes at the rate of* 1 *ampere per second.*

The magnetic field generated in a coil of wire by passing a given current through it is proportional to the number of convolutions. By doubling the number, the magnetic field is doubled, and this doubled field will, when the current is stopped or started, cut the windings, which are twice as many as in the former case, and thus generate four times the E.M.F. If the convolutions are quadrupled the quadrupled magnetic field cuts the quadrupled turns, so generating sixteen times the E.M.F. It will, therefore, be apparent that the inductance of a coil of wire is proportional to the *square* of the number of turns of wire.

The inductance of an electro-magnet varies somewhat with the value of the current employed, because the magnetic field generated in the core depends upon the degree or intensity of the magnetization of the iron, and is not in direct ratio to the magnetizing force. Hence, in stating the inductance of a relay, for instance, the value of the current is stated. The inductance of a P.O. standard relay A is 3·55 henrys, and of a B relay

3·74 henrys with their coils in series for a current of 20 mA. The inductance, when small in value, is often expressed in thousandths of a henry, or in milli-henrys.

The inductance of a relay with its coils in parallel is one-quarter of its value with its coils in series, since the effective number of turns is one-half in the former case.

ALTERNATING CURRENTS*

The current which flows through a circuit connected to a battery or to a dynamo is uni-directional, and is termed continuous or direct current to distinguish it from alternating current. When the current in a circuit constantly reverses in direction in a regular periodic manner flowing first in one direction and then in the other, it is termed alternating current. Such current is the result of an alternating E.M.F., and this might be produced by moving a conductor backwards and forwards across a magnetic field. If the coil shown in Fig. 92 revolves on its axis in a magnetic field, an alternating E.M.F. is generated. The ends of the coil are connected to two continuous insulated metal rings (termed slip-rings), mounted on the shaft carrying the coil with which two metal brushes are in contact, and the external circuit is thus joined to the coil.

It has previously been explained that the E.M.F. generated whenever a conductor cuts a magnetic field is directly proportional to the rate of cutting. The coil in Fig. 92 revolves at a constant speed in a uniform magnetic field and the highest value of the E.M.F. will, therefore, be generated at the moment when the plane of the coil lies along the magnetic field. For, if the motion of any conductor be considered, it is cutting the lines at the greatest rate at the moment when it is opposite the middle of the N. pole, its motion being at that instant practically parallel with the pole. When

* A non-mathematical treatise, *Alternating Current Work*, by Perren Maycock (Pitman & Sons) may be recommended for further information.

it has moved through 45° it is moving at this angle to the field and the rate of cutting is less, whilst after rotating through 90° the conductor is moving along the lines and the E.M.F. generated at this instant is nil. As the conductor passes over the top it begins to cut the field in the opposite direction, and an E.M.F. in the reversed direction commences and grows in

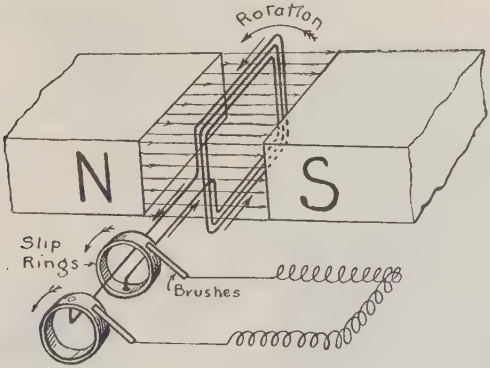

FIG. 92. PRINCIPLE OF ALTERNATOR

strength until it reaches a maximum when the conductor is opposite the centre of the S. pole. From this point it declines, until at the bottom of the field it is again zero.

The Generator. In order to generate any considerable value of E.M.F. it is necessary that a large number of lines of force be cut at a considerable speed by a number of suitably arranged conductors. This result may be accomplished in quite a large variety of ways, one of which is exemplified by the "generator," used in telephony and also in the Wheatstone ABC. In reality, it is the Siemens magneto-electric machine of 1857, made to a small scale and minus the commutator.

The generator usually consists of three permanent magnets, whose poles of like sign are united by two

hollowed soft iron pole pieces, between which is placed a revolving armature of soft iron wound with *a suitable number of turns* of fine, silk-covered, copper wire. The instrument as a whole is illustrated in Fig. 93, whilst constructional sketches are given in Figs. 94 and 95. The armature is of the well-known H-form, and the coil is wound upon the central web. When the armature

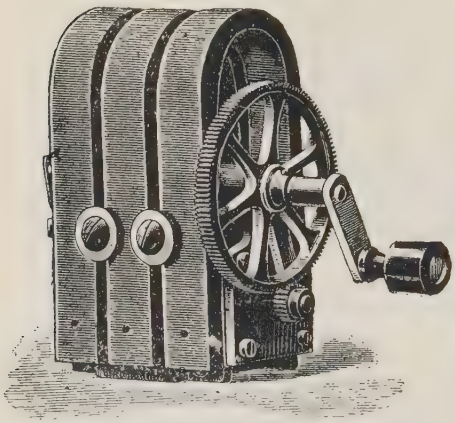

Fig. 93. View of a Magneto Generator

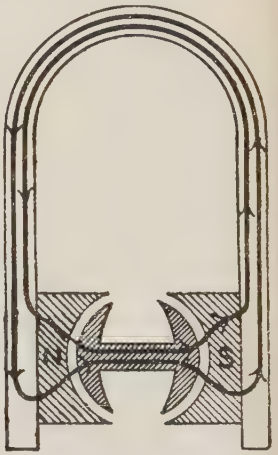

Fig. 94. Magnetic Circuit of Generator

occupies the position shown in Fig. 94, the lines of force pass through the central web in the general direction shown by the two heavy lines. When the position of the armature is changed with respect to the magnet, the position of the lines with respect to the coil of wire is altered, thereby generating an E.M.F. It should also be noted that the magnetic field passing through the coil is intense, since the magnetic circuit is almost wholly of iron, the two small gaps of air between the armature and the pole-pieces being only of sufficient width to provide a working clearance.

The value of the E.M.F. at every instant during a

revolution, together with the position of the armature at each quarter of a revolution, is shown in Fig. 96. Imagine that the armature is revolving at a uniform speed, and that, to commence, it occupies the position

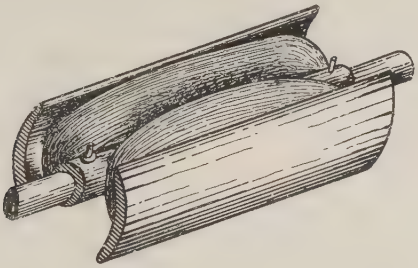

Fig. 95. Armature of Generator

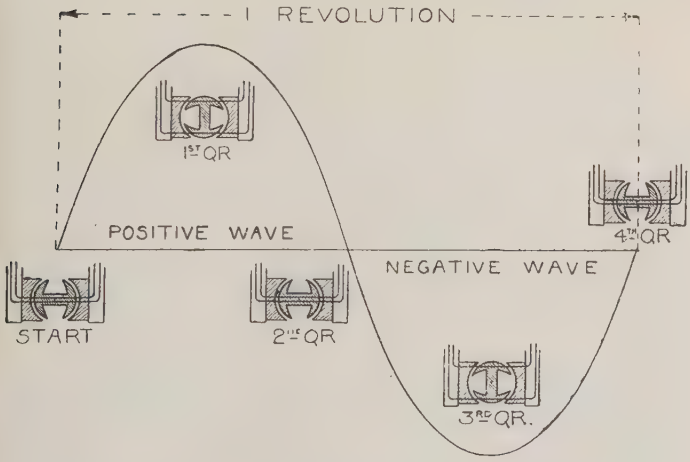

Fig. 96. Illustrating Current Waves Sent Out by Generator

marked "start." Here, the whole of the lines of force pass through the coil along the web, and none through the curved portions of the armature. When the armature has turned through a quarter of a revolution there

will then be no lines of force passing through the coil. At this point the value of the E.M.F. generated is at a maximum ; it then steadily decreases in value during the succeeding quarter of a revolution. Up to the third quarter of a revolution the number of lines flowing through the coil steadily decreases in value until the maximum E.M.F. in the reverse direction is reached. From this point to the end of the revolution the negative E.M.F. gradually sinks from its maximum value to zero, when the armature occupies the same position as at the start.

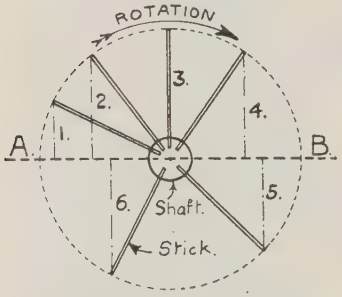

FIG. 97. SINE OF AN ANGLE

Alternating Current Wave. It is particularly important that the reader should gain a clear conception of an alternating current wave. Imagine that a stick is fixed at right angles to a slowly revolving shaft. The vertical distance between the end of the stick and the horizontal line AB varies from nothing at A, where it is in line with AB, to a maximum at 3, where the stick is at right angles to AB. If the end of the stick moves round the circle at a uniform speed in 360 seconds, it will be possible to note carefully the distance between the end of the stick and AB, and it will be recognized that this distance increases gradually from nothing at A to an amount equal to the length of the stick at 3, and that then it gradually decreases to nothing at B. Onwards the distance increases in the opposite or negative direction until it is equal to the length of the stick opposite 3, and that this negative distance gradually diminishes until it reaches A, when it is again zero. The reader is urged to realize that at every instant of time in the 360 seconds the distance has a definite value considered positive above the line AB and negative below it. A circle is divided into four right angles, each of 90°, and the revolution of the stick is at the rate of 1° per second. If a line be drawn between the end of the stick and AB and divided into 360 equal parts, and the distance marked at each second of time from the start to the end of the 360 seconds, the tops of these lines will mark out a curve. In Fig. 98 the circle has been divided into

sixteen parts as has the line to the right and by the construction described the curve illustrated is traced out. This curve shows the relation between the vertical distance from the top of the stick to the horizontal line at *every* instant during $1\frac{1}{4}$ revolutions of the stick. This curve is called a sine curve because it shows the values of the function known as the sine of the angle from an angle of 0° up to 360°. The sine of any given angle made by the stick is the number obtained by dividing the vertical distance of the top of the stick from the horizontal line, by the length of the stick when the stick makes that given angle with the horizontal line. The length of the

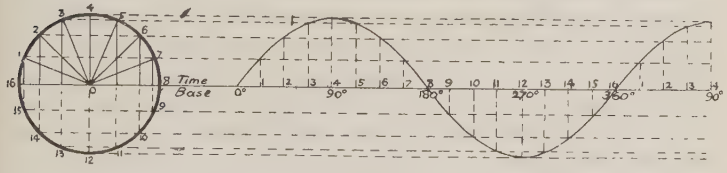

Fig. 98. Sine Wave

stick is the radius of the circle, and if this is 1 ft., the sine of the angle which the stick makes with the horizontal is the vertical distance of the end of the stick from the horizontal measured in fractions of a foot for any given angle. It will therefore be seen that the sine of 0° is nothing, that the sine of 90° (written sin 90° = 1, sin 180° = 0, sin 270° = − 1, and sin 360° = 0.) Tables giving the values for the sines of all angles from 0° to 90° are available. Values beyond this may be readily obtained by remembering that the values 180° to 90° respectively correspond to those 0° to 90°, and that 180° to 360° is negative.

To recapitulate, it is specially desired that, from the consideration of the motion of the stick in Fig. 97 the reader shall obtain a clear mental picture of the gradual rise, fall, and reversal of the current in an alternating current circuit. The vertical distance of the end of the stick above or below the horizontal line through the shaft represents the positive or negative value of the current at each and any instant during a revolution or cycle. From this it is quite easy to establish a clear mental picture of the gradual rise of the current to

a positive maximum, its fall to zero, its rise to a negative maximum, and its fall to zero, and to appreciate that this cycle is repeated continuously. Also, that its value at any instant is proportional to the sine of the angle between the horizontal line and the stick at that instant.

Referring now to Fig. 92, the E.M.F. generated in the coil when revolving in a uniform magnetic field at constant speed has a definite value at each instant of time during its revolution and this value varies from 0 to a positive maximum, gradually falls to nothing, then increases to a negative maximum, and falls to 0 at the end of the revolution. Its value, is, in fact, proportional to the sine of the angle at every instant. The E.M.F. generated by the coil of wire is a pure sine wave. That generated by the magneto generator is not, owing to the presence and form of the iron in the armature, the peak of the wave given being higher and sharper than that of the sine curve.

The alternating current used for power and lighting purposes is usually produced by an alternator driven by a turbine. The alternator has a number of poles and the armature is similarly arranged, so that very large magnetic fields are cut by a large number of windings at considerable speed, changes in direction of the current being due to changes in the relative directions of motion of the rotor and the stator magnetic fields. There is yet another point to be considered, and that is the rate at which the E.M.F. alternates.

Its periodicity is calculated by multiplying the number of pairs of poles by the number of revolutions per second, since a complete cycle of current is produced each time a coil passes a pair of poles. The term frequency or periodicity is the number of *complete* waves (corresponding to one revolution of the coil in Fig. 92) per second. For telephone ringing current the periodicity is usually $16\frac{2}{3}$ periods or cycles per second. For electric lighting it is generally about 50, whilst the

most important frequency for alternating currents due to speech is 800.

Virtual Current and E.M.F. Since an alternating current varies from nothing to a maximum, its average value is less than its maximum, and, therefore, a direct current of 10 amperes flowing through a wire resistance of 10ω generates more heat in the wire and so represents more energy than an alternating current having a maximum value of 10 amperes. The heating effect is proportional to the square of the current and, therefore, the direct current of 10 amperes would be more effective in heating the wire than an alternating current which had an average value of 10 amperes; this average being obtained by adding up the values of the current measured at a large number of intervals over the complete period and dividing this result by the number of measurements taken (the result would be $2/\pi$ or ·637 of the maximum value of the current). This difficulty is met by taking the square of each value measured, and adding these results together. This value is then divided by the number of measurements taken, so giving the *mean square* of the current. The square root of the mean square is then obtained, and it is this value which corresponds in value to a similar value of direct current. Alternating E.M.F.'s and currents are expressed in virtual volts and virtual amperes and are root mean square values (often abbreviated as R.M.S.) taken over a period or cycle. Thus, the heating effect of an alternating current of, say, 100 virtual amperes is equal to that of 100 amperes direct current in a given circuit. Voltmeters and ammeters for alternating currents read in virtual volts and amperes and direct current would produce the same readings as alternating currents if of equal values.

The root mean square value is readily obtained by a mathematical process from the maximum value of the E.M.F., and it is equal to $\frac{1}{\sqrt{2}}$ (= ·707) of that

value (i.e. if the maximum E.M.F. at the top of the sine waves is 100 volts or 100 amperes, the virtual values are 70·7 volts and 70·7 amperes respectively).

The Measurement of Alternating Current. The ammeters and voltmeters used for measuring alternating current must necessarily be of a non-polarized type. They may be of the hot wire or of the moving iron type.*

For extremely small alternating currents the Duddell thermo-galvanometer is used. In this instrument the

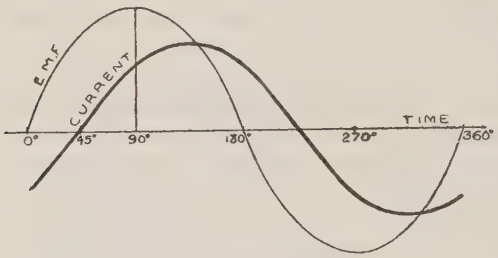

Fig. 99. Current Wave Lagging 45° Behind E.M.F. Wave

current to be measured passes through a coil of very fine wire, and the heat generated acts upon a thermo couple connected to a modified D'Arsonval coil arrangement.

LAG AND LEAD

The zero and maximum values of the current occur at the same time as the zero and maximum values of the E.M.F. in an alternating current circuit only when its capacity or inductance are negligible. If, therefore, the E.M.F. curve be drawn as in Fig. 98, the current curve will, if drawn to a suitable scale, coincide with it. The current is then said to be in phase with the E.M.F. when the zero value of the current occurs at the same instant as the zero value of the E.M.F. and the maximum values occur similarly. If the circuit possesses

* Perren Maycock's *Electric Light and Power Distribution*, Vol. I, Chap. VII.

self-induction the current takes an appreciable time to rise and fall owing to the opposition of the E.M.F. of self-induction, and the current in such a circuit therefore lags behind the E.M.F. This is illustrated in Fig. 99, where the current is shown as lagging 45° behind the E.M.F. The power in watts at any instant is obtained by multiplying the value of the E.M.F. by the value of the current at that instant.* The maximum value for the lag is 90°, and in this case the power is nil.

The effect of capacity is opposite to that of inductance and causes the current to lead in front of the E.M.F. It is not, therefore, surprising to find that by suitably arranging the value of capacity to the value of the inductance the two effects may be made to balance and to cancel each other.

IMPEDANCE

The presence of capacity or inductance in a circuit has a definite effect on the relation between the E.M.F. and current in an alternating current circuit. The unit of self-induction was defined in terms of the opposing voltage generated when the current changed in value at the rate of an ampere per second (p. 195). An alternating current continually varies in value from nothing to a positive maximum, diminishes to zero, and then rises and falls in the negative direction. Since the current is continually changing in value, there is an opposing E.M.F. due to self-induction operating continuously and, therefore, the value of the current in a circuit containing inductance is less than the value obtained by Ohm's Law (i.e. the value of the E.M.F. divided by the resistance of the circuit). The result obtained by dividing the E.M.F. by the current in an alternating current circuit is the *apparent resistance* of the circuit,

* The power in watts $= EC \cos \phi$, where ϕ = angle of lag or lead and $\tan \phi = pL/R$.

and is termed the impedance. The law for alternating current circuits which corresponds to Ohm's Law for direct current is obtained by substituting impedance for resistance in Ohm's Law—

$$\text{Current (virtual amperes)} = \frac{\text{E.M.F. (virtual volts)}}{\text{impedance (equiv. ohms)}}$$

$$\text{Impedance} = \frac{\text{E.M.F.}}{\text{current}}$$

$$\text{and E.M.F.} = \text{current} \times \text{impedance.}$$

Impedance, in a circuit containing self-induction, is made up of two parts, the one being the ohmic resistance of the circuit and the other, termed the inductive reactance or reactance, which is proportional to the value of the inductance and to the frequency or periodicity of the alternating current.

It can be shown that—

$$\text{Impedance} = \sqrt{R^2 + p^2 L^2}^*$$

where p is $2\pi \times$ periodicity
L is the inductance in henrys
and R is the ohmic resistance.

A direct current E.M.F. of 100^v will produce a current of 1 ampere through a resistance of 100^ω. If this resistance is free from inductance and capacity, an alternating E.M.F. of 100 virtual volts will likewise produce a current of 1 ampere. But if the resistance has an inductance of ·55 henry the current produced will be only half an ampere when the frequency of the alternating current is 50 cycles per second. Thus, the

* See Perren Maycock's *Alternating Current.*
The rigorous proof of this relation requires an application of the calculus. From the definition of inductance $e = L \cdot dC/dt$, and as the rate of change of C (when C is a sine wave) is a sine curve 90° behind C, the E.M.F. of self-induction is 90° behind the current wave. Hence, $e = C \cdot pL$. The vector sum of R and pL is $\sqrt{R^2 + p^2L^2}$.

impedance of the circuit is equivalent to 200^{ω} since the current is ·5 ampere.

$$\frac{100 \text{ virtual volts}}{200^{\omega} \text{ impedance}} = \cdot 5 \text{ virtual ampere}$$

Thus, although the ohmic resistance of the circuit is only 100^{ω}, its impedance is 200^{ω}.

The value of the impedance can be found graphically by constructing a right-angled triangle having the length of its perpendicular and base proportional in length to the values of pL (the reactance) and R (the resistance). The hypotenuse of this triangle, when measured in the same units, is then equal to the impedance (Fig. 100).

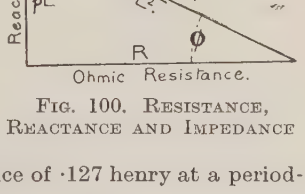

FIG. 100. RESISTANCE, REACTANCE AND IMPEDANCE

EXAMPLE. What is the impedance of a circuit having a resistance of 30^{ω}, and an inductance of ·127 henry at a periodicity of 50 cycles per second ?

Draw the base line for $30^{\omega} = 3$ in.

Reactance $= 2 \times \pi \times n \times L$

$= 2 \times 3{\cdot}1416 \times 50 \times {\cdot}127 = 40$ approx.

Draw the perpendicular = 4 in.

On measurement the hypotenuse will be found to be 5 in. The impedance of the circuit is therefore 50 ohms.

By Euclid's proposition 47 of Book I, the square on the hypotenuse of a right-angled triangle is equal to the sum of the squares on the two other sides. Applying this to Fig. 100 it will be seen that : Impedance$^2 = R^2 + (pL)^2$.

Hence, impedance $= \sqrt{R^2 + p^2L^2}$.

The construction of this triangle gives another important relation, since the angle at the base is the angle by which the current in the circuit will lag behind the E.M.F. The reactance (pL) divided by the resistance (R) is the tangent of this angle, and it will therefore be easy in any given case to find the angle of lag by the aid of a table of tangents.

EXAMPLE. What is the impedance of a relay (i) in series, and (ii) in parallel (inductance in series 3·5 henrys) at periodicities of (*a*) 16 (40 words per minute), and (*b*) 160 (Wheatstone at 400 words per minute) ?

Impedance (i) (*a*)

$$= \sqrt{200^2 + (2 \times 3{\cdot}1416 \times 16 \times 3{\cdot}5)^2}$$
$$= 405\omega$$

Impedance (ii) (*a*)

$$= \sqrt{50^2 + (2 \times 3{\cdot}1416 \times 16 \times 3{\cdot}5 \div 4)}$$
$$= 107\omega$$

Impedance (i) (*b*)

$$= \sqrt{200^2 + (2 \times 3{\cdot}1416 \times 160 \times 3{\cdot}5)^2}$$
$$= 3667\omega$$

Impedance (ii) (*b*)

$$= \sqrt{50^2 + (2 \times 3{\cdot}1416 \times 160 \times 3{\cdot}5 \div 4)^2}$$
$$= 887\omega$$

A direct current E.M.F. of 2^V would produce a current of 10 mA through the relay in series, but only 5 mA for an alternating current having a periodicity of 16 and little more than $\frac{1}{2}$ mA at 160. When the periodicity is raised still further the disparity becomes more marked owing to the energy absorbed in hysteresis in taking the iron through the magnetization cycle and in producing eddy currents. This energy is represented by apparently increased resistance. For example a 1000ω magneto bell has an effective resistance of $10{,}660\omega$ and an inductance of 2·55 henry at 800 periods per second when measured by an alternating current of ·3 mA as compared with an ohmic resistance of 1000ω and an inductance of 1·305 when measured by direct current.

In the case of iron wire the current does not distribute itself evenly over the cross-sectional area of the wire but is largely confined to a thin outer layer owing to the circular magnetization of the iron wire. Thus the effective resistance of an iron wire at speech frequency is much greater than the resistance measured by a Wheatstone bridge.

The power or rate of doing work (in watts) in a direct current circuit is obtained by multiplying the E.M.F. and current together. But, in an alternating current circuit having inductance the current lags behind the E.M.F., and, therefore, the product of virtual volts by virtual amperes gives a result which

is greater than the true power. This is readily appreciated if the extreme case be taken where the current is 90° behind the E.M.F. The maximum value of the E.M.F. occurs when the current is nil and the power is at this instant nil. The angle of lag has to be taken into account, therefore, in ascertaining the power in such a circuit. It will here suffice to explain that a choking coil having a low ohmic resistance and a high value of inductance is often used in an alternating current circuit to reduce the voltage applied to the rest of the circuit. Since the coil operates by setting up an opposing E.M.F. and increasing the lag of the current behind the E.M.F., the power taken up by the coil and transformed into useless heat is very little indeed. In this respect it is very different from a resistance placed in a direct current circuit where wasted energy is equal to the current multiplied by the E.M.F. taken up by the resistance.

When an alternating current circuit contains resistance, inductance and capacity, the impedance is—

$$= \sqrt{R^2 + \left(pL - \frac{1}{pK}\right)^2}$$

where K is the capacity in farads.

For a given frequency p the circuit becomes equivalent to one having only R ohms resistance, when

$$pL = \frac{1}{pK}$$

or

$$L = \frac{1}{p^2K}$$

The circuit is then said to be resonating.

For example, a circuit having a capacity of 20 m.f. will resonate at a periodicity of 800 when the inductance is ·002 henry, e.g.

$$L = \frac{1}{p^2K}$$

$$= \frac{1}{(2 \times 3{\cdot}1416 \times 800)^2 \times {\cdot}00002}$$

$$= \frac{1}{5000^2 \times {\cdot}00002} = {\cdot}002 \text{ henry.}$$

The Use of Impedance in Telegraphy. The impedance of a coil having an appreciable amount of inductance is much greater than its ohmic resistance and this difference increases as the periodicity of the alternating current is raised. Such a coil bridged across a circuit can be so designed as to be practically unaffected by an alternating current of voice frequency (800 per second), but it would be energized either by direct current or by slow key speed alternating currents (16 per second). An example is in the use of inductances in the various systems by which simultaneous telegraphy and telephony are carried out on the same circuit (*vide* Chapter XX).

Inductance is also valuable in improving the transmission or speed of working on submarine and underground cables (*vide* Appendix A).

The Use of Condensers in Telegraphy. If a condenser is inserted in a circuit, the passage of direct current is stopped. There is, it is true, a momentary rush of current to charge the condenser when the battery is connected to the circuit, but this current ceases immediately the condenser is charged to a potential difference equal to the E.M.F. of the battery. Similarly, if the battery is short-circuited, the condenser discharges round the circuit—if the battery is disconnected the condenser loses its charge by leakage. During the interval between this momentary charge and discharge there is no current flowing and the circuit may be said to be disconnected at the condenser. An alternating current, on the other hand, passes through the circuit and its value is little affected by the insertion of the condenser. When the circuit possesses inductance the current may be increased by a condenser of suitable capacity in series.

The interposition of a condenser avoids and mitigates the effects of earth currents (Chapter XXII). Signalling and reading condensers (Chapter XIII) are used to increase the speed of working. Condensers are used

also for balancing purposes in compensation circuits (Chapter IX).

DIRECT CURRENT GENERATOR

A direct current generator or dynamo, driven by an electric motor coupled directly to it, is generally employed for charging the secondary cells required to work a large office. If a commutator consisting of a divided ring replaces the slip-rings of Fig. 92, the conditions shown in principle in Fig. 101 will result.

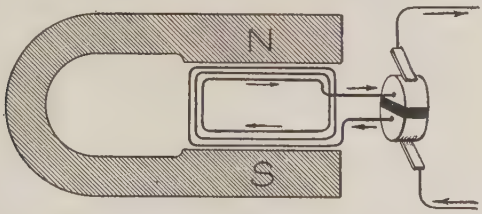

Fig. 101. Principle of Direct Current Generator or Dynamo

The current collected by the two brushes is unidirectional, but has a wave form represented by repeating the first half in place of the second half or negative portion of the alternating current wave. If, instead of a single coil a large number of coils are used, a very steady and uniform current may be obtained. By using an intense magnetic field with one, two, or more pairs of poles the required E.M.F. may be generated. It may be pointed out that with a given speed of revolution and a given arrangement of conductors on the armature, a certain E.M.F. depending on the flux of the magnetic field will be generated. The comparatively small current for providing the field is shunted off the armature, and by inserting a rheostat in the field magnet circuit the flux can be varied, and thus the E.M.F. generated can be accurately regulated.

CHAPTER VIII

SINGLE CURRENT SYSTEMS, RELAYS AND THE DOUBLE CURRENT SYSTEM

Earth Return. Two conducting paths are required between the battery and the apparatus to be actuated by the current, in order that the circuit may be complete. For one of these paths the earth itself is employed, thus saving the extra cost, extra battery power and the extra liability to faults which the second wire entails. The earth return may be regarded as a perfect path having no resistance. There are, however, circumstances in which an earth return is inadmissible (*vide* earth currents).

The current actually traverses the earth, which, on account of the vast volume of material between the two plates, forms a path of practically no resistance. At any large offices many circuits are simultaneously sending and receiving currents of varying magnitudes and directions, all of which pass to the same earth connection. For example, let there be three circuits working between Manchester and Liverpool and let two of these send 15 mA *to* earth, whilst one is receiving 15 mA *from* earth (Fig. 102). Two currents in opposite directions cannot exist in one conductor at the same time. The explanation is that the batteries combine at the sending end, and it is only the balance of current, viz. 15 mA, which is conveyed by the earth.

Batteries 2 and 3 each send $7\frac{1}{2}$ mA to earth, whilst the 15 mA going to the negative of 1 is made up of the remaining $7\frac{1}{2}$ mA from battery 2, and $7\frac{1}{2}$ mA from battery 3. Consideration of any required combination will show that the batteries combine in series as far as possible, and that the earth then conveys the balance of current.

The resistance of an earth is practically the resistance

of the connection between the plate and the earth in immediate contact with it. In fact, the resistance between two earths in identical types of ground will be the same whether they are 100 yd. or 100 miles apart.

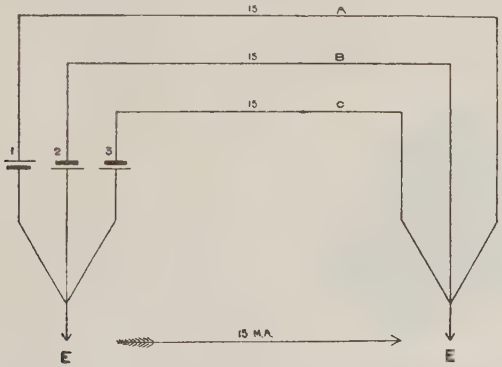

Fig. 102. Principle of Earth Return

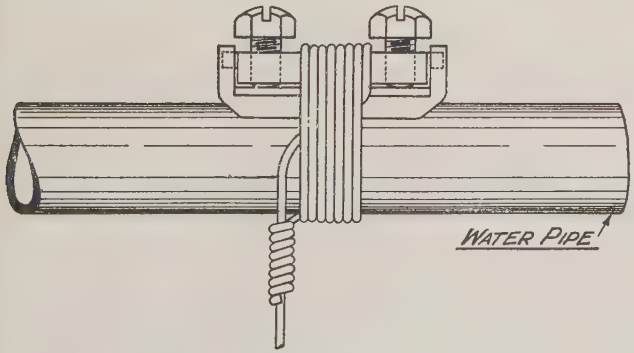

Fig. 103. Earth Clip No. 3

Earth Connection. The earth connection is made by sinking a galvanized iron plate 2 ft. 6 in. square or 2 ft. 6 in. × 1 ft. 9 in. into the ground. Soldered to the plate is a 7/18 stranded copper wire. At a small or sub-office, a *GI* plate 1 ft. × 1 ft. with 3/20 copper

wire is used when an earth clip cannot be employed. The plates should be sunk in damp ground, and where this cannot be obtained, recourse must be had to neighbouring watercourses. An earth clip connection is made by fixing a clip to the water pipes (Fig. 103). No earth which has a resistance exceeding 10^{ω} can be considered as efficient. For very large offices this figure is altogether too high, and several separate earths are made with copper plates 4 ft. $\times$ 4 ft. connected with 19/16 soft copper strand, and all are joined together.

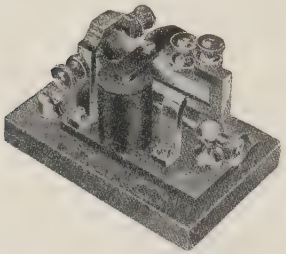

Fig. 104. P.O. Sounder

Sounder. The Post Office pattern of sounder, shown in Fig. 104, consists of an electro-magnet with a soft iron armature held away from its cores by an antagonistic spring. The tension upon this spring is adjusted by means of the screw supported on the brass base of the instrument. The armature is fixed to the square and somewhat heavy brass bar which is carried upon a steel axle with pointed ends. The ends of the axle are held in the hollowed ends of two screws. The armature bar carries an adjusting screw which determines the proximity of the armature, when depressed, to the cores. The screw immediately in front determines the amount of play to be given to the armature. The armature adjustment screws and the axle screws are all provided with lock nuts or clamping screws, which bank against the fixed portions. These preserve the adjustments by preventing the screws from working loose.

When attracted, the armature should clear the cores so as to prevent the formation of a closed magnetic circuit. The effect of the air gap is to permit the formation of definite poles at the ends of the cores

which, on cessation of the current, bring about immediate demagnetization. The shorter the electro-magnet and the longer the air gap the more rapid and complete is the demagnetization. In general, the air gap should not be much less than the thickness of a sheet of good notepaper if sticking is to be avoided.

The coils of the 20$^{\omega}$ sounder are wound to a resistance of 21$^{\omega}$ with a 420$^{\omega}$ non-inductive resistance in parallel (joint resistance 20$^{\omega}$). Its figure of merit is 55 mA. When adjusted so that the armature play and the clearance when depressed are each 10 mils, the sounder should work with 55 mA, whilst the tension screw is given three complete revolutions. Sounders for secondary cell working have a resistance of 900$^{\omega}$ (1000$^{\omega}$ coil with a 9000$^{\omega}$ shunt) and are worked with 24^{v}. The figure of merit is 11 mA and the test applied is similar to that for the 20$^{\omega}$ sounder.

Vyle Polarized Sounder. The principle of this instrument, invented by C. C. Vyle,* is illustrated in Fig. 105. The yoke of an ordinary sounder is replaced by a tungsten steel permanent magnet, separated from the cores which it polarizes by an air-space of $\frac{1}{32}$ in. ; this is in order to prevent the passage of working currents from affecting the strength of the permanent magnet. It is, in fact, a Hughes electro-magnet with its parts somewhat differently disposed, the permanent magnet being fixed in the base of the sounder at right angles to the cores.

When the instrument is properly adjusted the upper and lower positions of the armature are positions of balance which the smallest impulse upsets, thus starting the armature movement. In the upper position the force of the antagonistic spring prevails, whilst in the lower position the magnetic attraction exceeds the upward pull of the spring. The pull of the cores on the armature varies inversely as the fourth power of the

* " The Polarized Sounder," by C. C. Vyle and E. V. Smart, *Post Office Electrical Engineer's Journal*, Vol. I, p. 6.

distance separating them, whilst the pull of the spring varies directly only as the distance through which the armature descends, and, therefore, the armature, whether moving upwards or downwards, is continually and rapidly accelerating and, consequently, makes a considerable impact when arrested by either of the limiting stops. Moreover, the instrument works on the central part of the magnetization curve where relatively

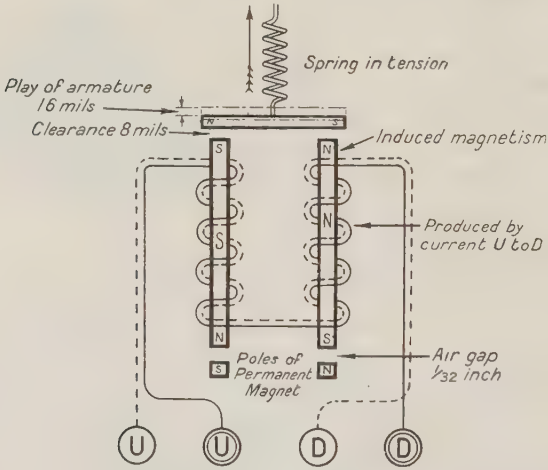

Fig. 105. Principle and Windings of Vyle Polarized Sounder

small changes in magnetizing force produce large flux variations, thus materially increasing the sensitivity.

The screws which determine the play and proximity of the armature to the cores in the ordinary sounder are replaced by fixed stops, thus leaving the tension of the spring as the only variable adjustment. The armature axle screws are also fixed and a grub screw is added on the tension pillar for clamping the tension screw after adjustment has been made.

The actual shape of the magnet and method of fixing is illustrated in Fig. 106. This magnet will lift a weight

of 6 lb. when its poles are connected by a keeper of the same cross section as the magnet limbs. The distance between the cores and the armature when down is 8 mils, and the play of the armature between the limiting stops is 16 mils.

The inductance of the $500\omega + 500\omega$ sounder is 62 henrys, and this serves to simplify the capacity balance on long or wholly underground circuits. Also,

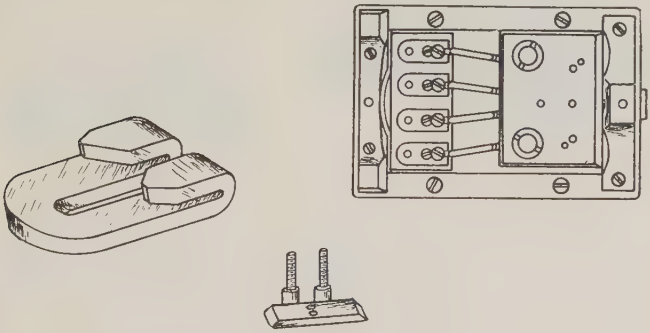

FIG. 106. BASE OF POLARIZED SOUNDER WITH MAGNET FIXING PLATE AND SCREWS REMOVED

on account of the inertia of its heavy armature, it is less affected by induction from neighbouring circuits than a standard relay.

The instrument can be wound singly or differentially to any desired resistances. Those used by the Post Office are shown below—

POLARIZED SOUNDER D

Type	Coil Resistance (Ohms)	Shunt Resistance (Ohms)	Figure of Merit (mA)	Polarizing Current (mA)	Differential Current (mA)	Inductance	
						Henrys	Measuring Current (mA)
2000ω	2308	15,000	$2\frac{1}{2}$	25	—	14	2
4500ω	5400	27,000	2	20	—	17·7	2
$100\omega + 100\omega$	100 + 100	—	6	60	300	1·7	10
$500\omega + 500\omega$	500 + 500	—	3	50	200	9·2	8

A polarizing current in the spacing direction of the values shown is applied for 15 seconds, after which the sounder should, without readjustment, still operate with the figure of merit current. This test ensures that the iron is of good magnetic characteristics. The value of the polarizing current is the maximum current with which each type of sounder will work satisfactorily. The differential test consists in passing a total current of 200 or 300 mA through the coils joined in parallel differentially, and then in series in opposition. The sounder should show no sign of response to reversals with this current.

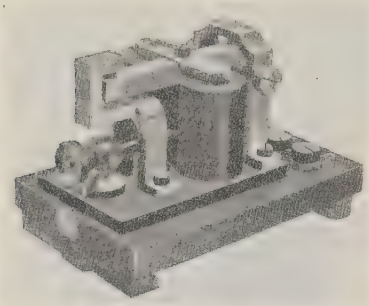

FIG. 107. POLARIZED SOUNDER WITH FIXED ADJUSTMENTS

Theory of Polarized Sounder.

Let d = distance between cores and armature.
m = magnetic force due to permanent magnet.

The induced magnetic strength of the armature will be $\frac{m}{d^2}$

$\therefore$ the attraction f_1 between the core and the armature will be

$$f_1 = \frac{\frac{m}{d^2} \times m}{d^2} = \frac{m^2}{d^4}$$

Suppose that in the lower position of the armature d is halved

$$f_2 = \frac{m^2}{\left(\frac{d}{2}\right)^4} \text{ and } f_2 \Big/ f_1 = \frac{m^2}{\left(\frac{d}{2}\right)^4} \Big/ \frac{m^2}{d^4} = 16 : 1.$$

Now consider the spring ; its original tension $= f_1$ and for a displacement $= \frac{d}{2} = f_1 + \left(c \times \frac{d}{2} \right)$ where c is a constant.

But the spring would have to be stretched considerably to double its original tension, and as it is obvious that it is only stretched a fraction of its length, its tension is something much less than twice f_1, so that—

$$\frac{\text{rate of increase of magnetic attraction}}{\text{rate of increase of spring tension}} \text{ is at least } 8 : 1.$$

During the upward movement the spring tension and magnetic attraction both decrease, but the latter falls off very rapidly (as the fourth power of the distance), whilst the spring tension decreases as the distance simply.

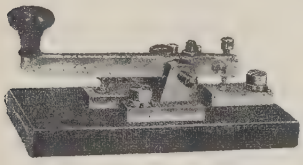

FIG. 108. SINGLE CURRENT KEY

Single Current Key. The single current key (Fig. 108) consists of a pivoted brass lever playing between two contacts, but normally held against the back contact by a spring. The underside of the lever in front is furnished with a gold silver alloy contact which, when the key is depressed, comes into contact with a similar stud fixed to the brass plate and terminal. The back stop, so termed in contradistinction to the front stop, is similarly tipped and normally makes contact with the adjustable contact screw which passes through the lever. The lever is split from the end for a short distance, and a screw is provided for tightening the grip upon the contact screw, thereby tending to preserve its adjustment. The tension adjustment is quite obvious.

Platinum is the ideal substance for contacts since it is extremely hard, does not oxidize, and has a high fusing point. It is, however, very expensive, and experiments are still in progress to discover a cheaper substitute. At present, a gold-silver alloy (10 per cent gold and 90 per cent silver) is used for the contacts of telephone apparatus generally, but platinum is still used on telegraph apparatus generally with the exception of single, double current, and electro-magnetic indicator keys.

Single Current Direct Sounder. The set comprises a battery, single current key, polarized sounder D, $100^{\omega} + 100^{\omega}$, and a single coil galvanometer. It is termed *direct* because the received current is used to make the signal directly and not indirectly by the aid of a relay.

The sounder is given a definite spacing bias, so that the armature normally rests on the upper contact. The ordinary 20^{ω} sounder which was formerly used on such circuits required a working current of 100 mA, as compared with about 23 mA with polarized sounders.

Up and Down Stations. Uniformity in connections is a most important matter on account of the difficulty of locating faults upon circuits which are not connected according to a definite system.* It is also desirable that all circuits fitted with the same type of apparatus should be connected alike at the instrument tables. The connection of the set as a whole to line and earth differs at the ends of a circuit in order that the connections at the tables may not vary, and it becomes necessary to distinguish between the two ends of the circuit. One end is termed the up station and the other is called the down station. The station nearest to London is "up" and that farthest removed from London is "down." For example, London is the up station upon any London circuit. In the case of a Manchester-Newcastle circuit, Manchester is up and Newcastle down. It will be found that the up station always connects the positive pole of the battery to the line when sending a marking current, hence the common phrase or statement that "the up station sends copper to line to mark."

The right side of the galvanometer is the "down instrument terminal," and the junction of the sounder and negative pole of the battery is the "up instrument

* Universal connections are dealt with in Chapters XI and XVII. At this stage, however, the reader is concerned only with primary battery worked Morse circuits.

terminal." The apparatus connections are shown in Fig. 109, whence it will be seen that the down line passes through the galvanometer to the central point of the key. The key at rest affords a path, via its back

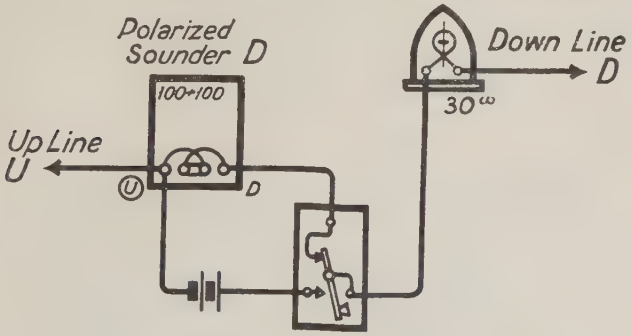

Fig. 109. Direct Sounder Connections

stop, through the sounder to the up terminal. When the key is depressed, the battery is connected positive to down and negative to up, the sounder being cut out of circuit by the severance of the connection between

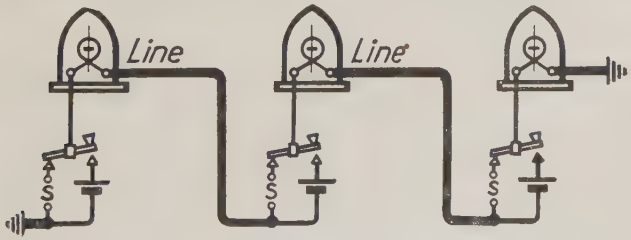

Fig. 110. Three Direct Sounders upon One Circuit

the key and the backstop. The galvanometer indicates the current sent or received.

Intermediate Stations. The connections necessary to join three sets upon a circuit are indicated in Fig. 110. At the up station the up line terminal of the set is earthed and the down line terminal is connected to

the down line, i.e. the line to the down station. It is important that this fact should be clearly remembered because the statement applies to nearly every type of apparatus. At the intermediate station the down line terminal is connected to the down line and the up terminal to the up line. At the down station the down terminal goes to earth, whilst the up terminal goes to the up line. It will be noticed that at an up station the line is called a down line, whilst from the point of view of the down station it is an up line.

Path of Current. The path of the current when the intermediate station depresses his key is from the positive pole of his battery, to centre of key, through the galvanometer, along the down line, through the down sounder, along the key, through the down galvanometer through earth, through the up sounder, along the key, through the up galvanometer, along the up line, back to the negative pole of the battery. Both sounders and all three galvanometers are affected. The path from the other stations is similar and should be sufficiently obvious. It may be remarked that the terms up and down line are employed above because the intermediate office was under consideration and the terms are relative to that office.

This type of apparatus is not used for busy circuits nor for circuits more than 10 miles long. The current required is 15 to 20 mA. The battery consists of No. 1 Leclanché cells, and is computed as under—

Number of Stations on the Circuit	Cells Required for Apparatus	Cells for Line per Mile
Two	6·2	·022 r.
Three	11·7	·022 r.
Four	22·1	·022 r.

Where r is the conductor resistance of the line wire per mile.

The Inker. This instrument comprises an electromagnet with an armature which, when actuated, causes a revolving disc immersed in an ink-well to be brought into contact with a paper tape moving at a uniform speed (see Fig. 111). The mechanical portion of the apparatus consists of a spring driven train of wheels, which revolve the inking wheel in a direction opposite to that in which the tape is moved. The tape passes

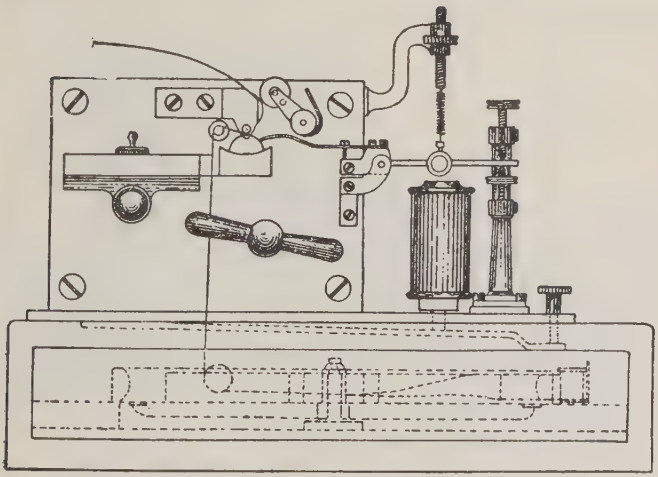

Fig. 111. Local Inker

between two rollers, one of which is free to move and presses upon the tape, the other being revolved at a uniform speed by the train of wheels. A governor is employed for securing the uniformity of the rate at which the tape moves forward, and a brake is provided for stopping the instrument when not in use. Two screws limit the play of the armature and inking disc in an upward and downward direction. These adjustments are made almost entirely from the point of view of securing clear inking marks, whilst the sensitiveness is varied by a screw which bodily raises or

lowers the electro-magnet as a whole. The armature usually consists of a soft iron tube split longitudinally to prevent the instrument being rendered sluggish in action by reason of the eddy currents which would otherwise be induced in the armature. This provision is, however, quite unnecessary.

The connections of the combined inker (formerly termed a direct writer) (Fig. 112) are similar to those of the direct sounder, but the battery and up and down line terminals are separately mounted upon the base of the instrument. The instrument illustrated in Fig. 111 is a local inker, and is sometimes used on relay worked circuits. It is wound with a 40ω coil and 500ω shunt for primary battery working (figure of merit 69 mA), or with a 1000ω coil and 9000ω shunt for secondary cell working (figure of merit 6 mA). The combined inker is similar, but contains a key and galvanometer upon the same base. The connections between line and earth are determined in the manner previously detailed. The electrical portions call for no comment.

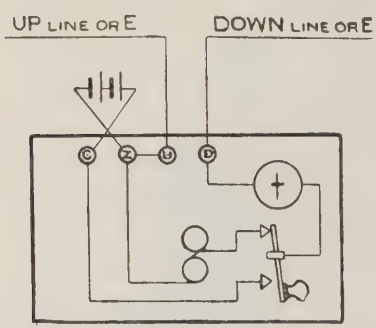

Fig. 112. Combined Inker Connections

The resistance of the electro-magnet of a combined inker is 300ω, and that of the galvanometer, which is of a simple form, about 30ω. The current required is from 15 to 20 mA.

The figure of merit of the electro-magnet is 4·9 mA, and 10 mA for the galvanometer, with which current a deflection of a quarter of an inch should be produced. The speed of the tape should be from six to seven feet per minute.

Polarized Inker. This instrument (Fig. 113) is used for central battery working when required. It is a combination of polarized sounder D and an inker. The coils are wound to 5400ω with a 27,000ω shunt and should, with suitable adjustment, work well with currents from 2 mA to 20 mA. A polarizing spacing current of 20 mA is applied for 15 seconds, after which the inker should still respond to 2 mA.

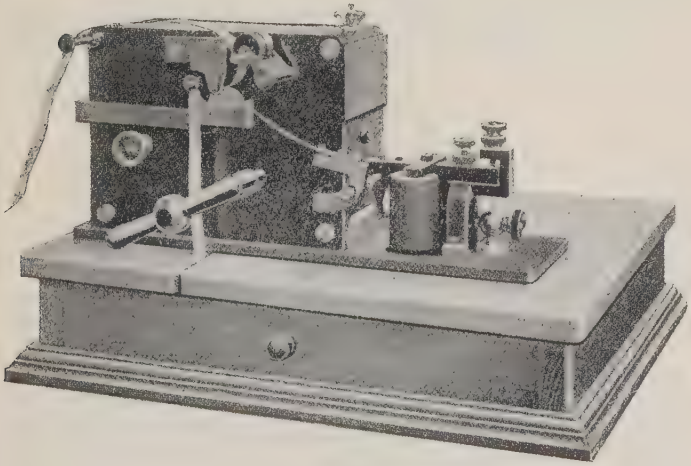

Fig. 113. Polarized Inker

Open and Closed Circuit Working. There are two methods of working circuits respectively known as the open and closed circuit methods. The direct sounder circuit may be taken as a typical open circuit method since the battery is not normally connected to the line, and in such circuits it will be obvious that a battery must be provided at each office on the circuit. A typical closed circuit method, which is very largely used in the Dominions and America, is illustrated in Fig. 114. The current is normally flowing through the circuit when idle, and signalling is effected by opening the

two-way switch attached to the key, thus permitting the circuit to be made and broken, in accordance with the movement of the key. The sounders are, of course, in the main circuit in series with the battery which may be located wholly at any one of the offices or may be distributed. The signals sent out are also heard upon the sounder at the sending station, and it is contended that this makes for better sending. In America this provision is almost universal.

With a number of stations upon one circuit there is only one battery, instead of one battery per station,

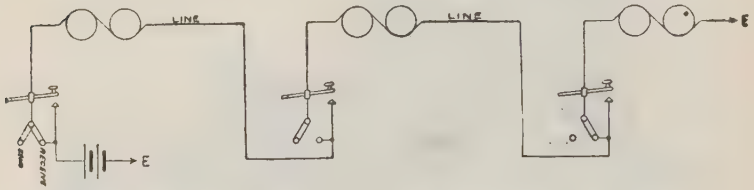

Fig. 114. Closed Circuit System (Intermediate Office Signalling)

to maintain, and this single battery may be located at the most convenient point. It will, therefore, be recognized that the waste of energy due to the single battery supplying current when the circuit is idle will be more than counterbalanced by saving in the cost of maintaining a similar but lightly worked battery at each office. Where secondary cells are used at the main station the saving is still greater.

The only other disadvantage is that if a switch is left open the circuit is stopped until it is closed again. With the double current system (q.v.) a similar happening would not be serious since the key current could be balanced out by placing an equal opposing battery in the line.

There is one other point to be considered, and that is, that, as compared with single current open circuit working, the closed circuit method gives greater

constancy of adjustment. The open circuit batteries at each station may differ somewhat in E.M.F. and, on account of varying insulation, the current received at any particular office may differ according to which station is signalling, thus entailing different regulation. This difficulty is minimized with the closed circuit

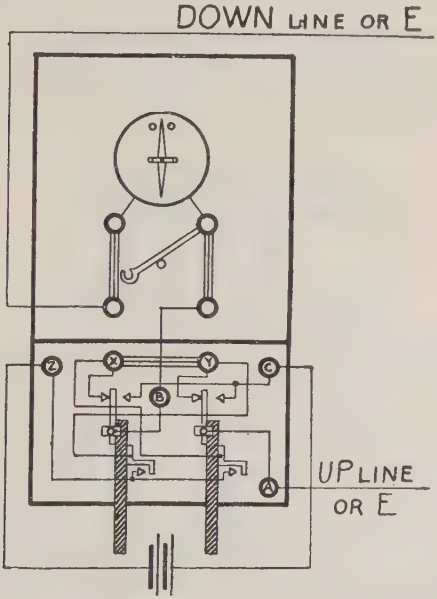

FIG. 115. CONNECTIONS OF SINGLE NEEDLE

method, since the current, whatever may be its value at each office, varies but little. Again, the use of the double current system obviates the difficulty.

The value of the current received at the end of a long line is, by reason of leakage, often very much less than the current sent out, and on a long closed circuit, were the battery located at the terminal office, it might readily happen that when the power was increased sufficiently to provide a good working margin at the

far end, its value at the sending end would be dangerously or extravagantly high. This is why on a long line it is usual to distribute the battery between various selected stations *en route*.

The central battery system (*q.v.*) may be cited as an example of the closed circuit method, but it is achieved without appreciable wastage of energy.

Single Needle and Double Plate Sounder.* These systems have long been abandoned by the Post Office, but a few circuits still survive, notably those used by railway companies. The single needle consists of a dial

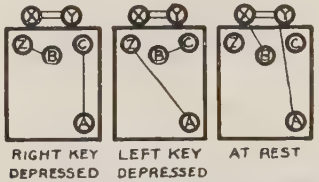

FIG. 116. SKELETON CONNECTIONS RESULTING IN EACH POSITION OF THE KEYS

of the Varley or Spagnoletti type (Figs. 43 and 44) and a commutator having two keys which connect the sending battery to line in a direction determined by which of the two keys is depressed. At rest, the commutator joins the dial coils to line and earth.

The connections are conventionally shown in Fig. 115. The keys are turned upon their sides, and movement to the left is equivalent to depression. The two contacts upon the right of the levers represent a bar connected to *C*, whilst the two front contacts represent a bar connected to *Z*.

Instead of the two-key commutator, the railway companies often use a drop handle type which, at rest, connects the dial and sends out dots or dashes according to the side to which the handle is moved.

* Detailed descriptions of these systems are given in the earlier editions of this work.

The Double Plate Sounder.* The double plate sounder employed a neutral relay and two sounders worked by a local battery, the object being to give such

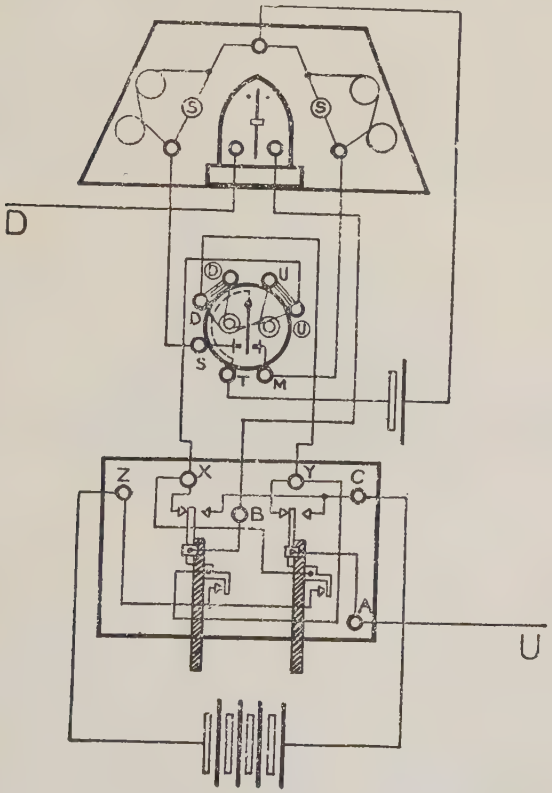

Fig. 117. Connections of Double-plate Sounder

volume of sound as to enable it to be read in a large and noisy instrument room. The connections are shown in Fig. 117.

* Fully described in earlier editions of this work.

RELAYS

A relay may be defined as an electro-magnetic device which either forms or breaks an electrical connection by the motion of its moving system produced by the passage of a current through the coils. Its prime purpose in telegraphy is to economize battery power, thereby obviating the use of extremely high voltages for working long circuits. The line current is employed to direct and control the movement of a contact arm which brings into action a battery at the receiving end of the circuit, and it is this battery which produces the actual signal.

Relays may be divided into two distinct classes (*a*) non-polarized and (*b*) polarized. In a non-polarized relay, the direction in which the armature or armatures move is independent of the direction of the current passing through its coils.

Polarized Relay. Polarized relays may be defined as relays in which the direction of movement of the tongue depends upon the direction of the current. The very commonly used and inaccurate expression " only marks with one direction of current," should be avoided, e.g. a mark is made by currents in either direction when the relay is used with the double-plate sounder (dash or dot according to the direction of the current).

Generally speaking, polarized are more sensitive than non-polarized relays. Also, the armatures of non-polarized relays are usually unmagnetized soft iron, while those of polarized relays are either permanent or induced magnets, i.e. polarized.

Relaying Sounder. This instrument is typical of the many varying forms which the non-polarized relay takes in different circumstances.

The relaying sounder consists of an electro-magnet with its armature mounted upon a brass lever playing between an upper and lower contact point. It differs from an ordinary sounder in the shortness of its electro-magnet, in the lightness of the armature lever, and

in the provision of platinum tipped contact points. The proximity of the armature to the cores when the former is depressed may be adjusted by means of the lower contact screw, which can be raised or lowered as required. The upward play is similarly adjusted by the upper contact screw, while the tension may be suitably varied by the screw which is to be seen at the front of Fig. 118.

Normally the lever joins the upper contact, but when actuated, the lower one. A current in either direction,

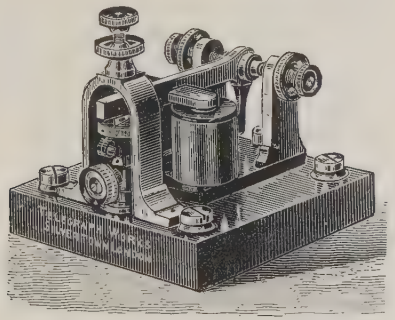

Fig. 118. Front and Side View of Relaying Sounder

provided it be of sufficient strength, draws down the armature.

The 30^{ω} type has a 60^{ω} coil and a 60^{ω} shunt. Its figure of merit is 60 mA. The 500^{ω} type has a 1000^{ω} coil and a 1000^{ω} shunt. Its figure of merit is 20 mA. Both types are used on repeaters (Chapter XVIII).

P.O. Non-polarized Relay "C." The Post Office non-polarized relay "C," used principally on quadruplex circuits, is somewhat larger than the P.O. standard relay and its two soft iron armatures are not induced magnets. The two electro-magnets are placed side by side, but with their pole pieces deflected so as to include the armatures in the magnetic circuit from core to core. The arrangement will be sufficiently apparent from

the plan of the top of the instrument (Fig. 119). The tongue is held to the right contact point by a spring, When a current passes through the coils in either direction the armatures are attracted against the force of the spring, causing the tongue to leave the right contact point and go over to the left.

The relay is differentially wound and an equal current flowing from D to U in one coil and U to D in the other,

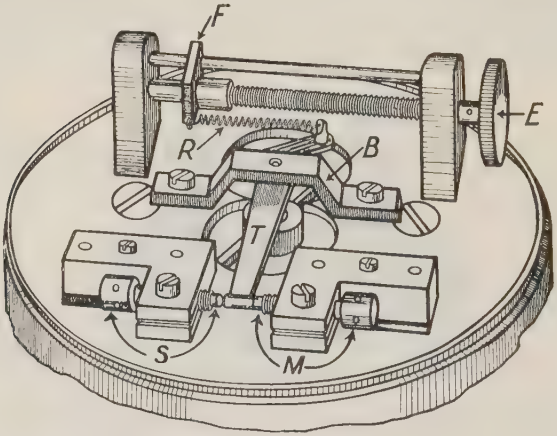

Fig. 119. Top of a P.O. Non-polarized Relay "C"

or vice versa, does not magnetize the cores of the relay. A current flowing in either or both coils from D to U, or U to D, magnetizes both cores and attracts the armatures. If the top of the left core is north the top of the opposite core is south, and, therefore, the magnetic circuit is from core to core through both armatures. Each armature is divided in the centre by a section of brass in order to prevent the armatures from becoming more or less permanently magnetized. Were it not for the magnetic separation of the armatures, the proximity of the armature to the cores and the consequent reduction of the air-gaps would produce conditions favourable for considerable values of residual

magnetism. These breaks in the magnetic circuit tend towards the production of rapid and complete demagnetization of the cores.

The relay has a resistance of $100^{\omega} + 100^{\omega}$ and it will work with $4\frac{1}{2}$ mA but, with the spring fully extended, may be biased against 10 mA. The polarizing current is 125 mA, and the relay is differential with 100 mA with its coils in series and with 200 mA in parallel. The $500^{\omega} + 500^{\omega}$ relay will work with 3 mA and may be biased against 8 mA.

FIG. 120. PLAN OF TOP ARMATURE AND CORES

Relays Used in Telephony. The relays which form so important a part in a large telephone exchange differ very widely from those previously described, although belonging to the same class, viz. non-polarized relays. Relays used for telephone signalling are designed from the point of view of reliability, compactness, and minimum cost, rather than from the point of view of sensitiveness and extreme rapidity of

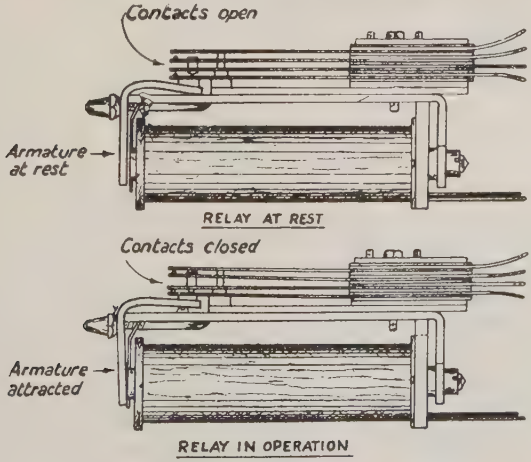

FIG. 121. A TYPE OF RELAY USED IN TELEPHONE EXCHANGE SYSTEMS

action. A typical relay (Fig. 121) consists of an electro-magnet with the right core end magnetically extended to the left on the end of which the armature rests. Sets of contact springs are placed above the horizontal extension of the armature. When energized the lower spring

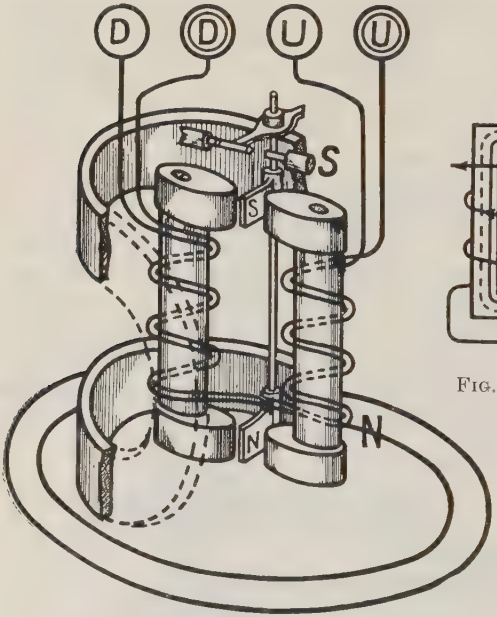

Fig. 123. Magnetic Circuits

Fig. 122. Principle of P.O. Standard Relay

of each pair is lifted to make contact with the upper spring.

P.O. Standard Relay. The P.O. standard relay consists of two electro-magnets placed side by side, between the poles of which are two movable soft iron armatures, rendered magnetic by induction from a large horseshoe magnet placed behind them. The instrument is shown in Fig. 124 with one of its electro-magnets removed, and in skeleton perspective in Fig. 122. The large horseshoe magnet is bent round the coils so as to occupy

the minimum space. For the reasons that obtained in the case of the inducing magnets employed in the single needle instrument, the upper pole is south and the lower north. The corresponding polarities are, therefore, imparted to the ends of the soft iron armatures *s* and *n*. The axle which carries *s* and *n* also carries the contact arm, transversely tipped with platinum. Upon either side is fixed a platinum-tipped contact screw, and it is between these screws that the tongue plays.

The instrument is differentially wound, *D* and *U* being the terminals of one coil, and *D*-circle and *U*-circle those of the other. A current passing from *U* to *D* or *U*-circle to *D*-circle makes the top of the left electro-magnet south and the bottom north, while the top and bottom of the right-hand electro-magnet are made respectively north and south. The armatures are, therefore, acted upon by four forces, being repelled by the left and attracted by the right electro-magnet. Reversal of the current reverses the direction in which the armatures tend to move. The two coils are equal in resistance, and with equal currents produce an equal effect upon the armatures. If a current is sent from *D*-circle to *U*-circle, whilst an equal one flows from *U* to *D* in the other coil, no effect is produced, since the two windings have an equal tendency to give the electro-magnet opposite polarities.

The general arrangement and directions of the windings are clearly visible in Fig. 122. A current passing from *D* to *U* or *D*-circle to *U*-circle causes the armatures to be held over to the left, whilst a current in the opposite direction sends the armatures to the right. The disposition of the terminals is shown in Fig. 125, from which it will be seen that a current from either *U* terminal to a *D* terminal causes *T* to make contact with *M*, whilst a current *D* to *U* brings *T* into contact with *S*. (*T*, *S*, and *M* are the first letters of the words tongue, space, and mark.)

The tongue of the relay when stationary always rests upon the *S* or *M* contacts, and never permanently in a central position. The two contact screws *S* and *M* are fixed upon a carriage which can be moved at will by means of the regulating screw. In this way the proximity of the armatures to either electro-magnet

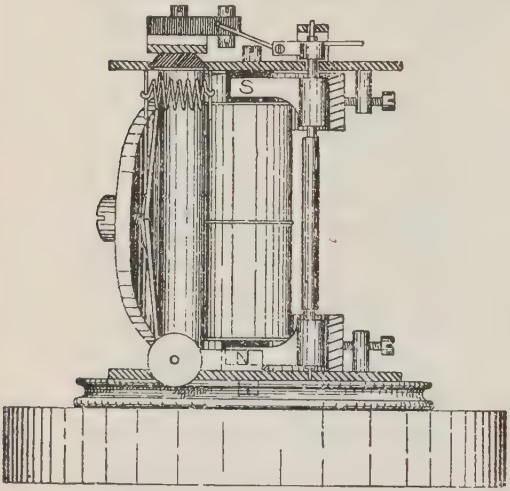

Fig. 124. P.O. Standard Relay "B" (Front Coil Removed)

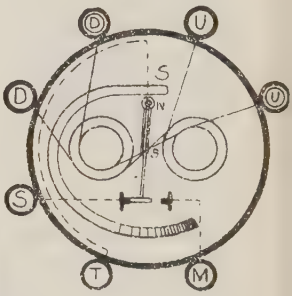

Fig. 125. Winding and Terminals of Standard Relay

may be varied. When the armatures are exactly midway between the polepieces if the tongue is held in a central position between *S* and *M*, the relay is said to be neutral, and the tongue will stay upon either side when placed there. When the armatures are placed in this central position the forces of attraction towards the polepieces upon either side are equal, but the balance is far too fine to be practically maintained. The moment the armatures move in the slightest degree the balance is upset and the armatures move over to the nearer side.

A relay which is not adjusted to neutrality is said to have a marking or a spacing bias as the case may be. A spacing bias means that the tongue will return to *S* after being moved over to *M* by the passage of a current. In that case it will be clear that even when deflected to *M* the *armatures* must be nearer to the left than to the right-hand electro-magnet. The most sensitive condition of the relay is when it has been set neutral, and the distance between *S* and *M* reduced to the smallest possible limits. Increasing the distance through which the tongue has to move reduces the working speed of the relay. The adjustments of the relay are, therefore, (*a*) bias, by means of the regulating screw, (*b*) play, by means of *S* and *M*.

P.O. Standard Neutral Relays. For use in connection with double-plate sounders, repeaters, etc., where it is necessary to produce an effect in both directions by movement of the tongue, two spiral springs are added. These springs, which are of course adjustable and fixed at right angles to the tongue, serve to hold it in a central position midway between *S* and *M*.

The adjustments of the relay are (*a*) For neutrality ; (*b*) for play of tongue ; (*c*) for centreing of the tongue ; (*d*) tension of the springs.

When a relay is first sent out it is in a neutral condition, when the spacing screw stands in the central position between the extreme limits of maximum spacing and maximum marking. If the relay is entirely out of adjustment the following procedure is recommended—

(*a*) Remove the springs and then place the spacing screw in its central position, i.e. with an equal number of threads upon each side of the block.

(*b*) Clean the contacts and adjust them until the relay is neutral and the required amount of play has been given. Then clamp the contact screws in position.

(*c*) Put on the springs and adjust until the tongue is exactly midway with the least possible amount of tension.

The object of the first operation is to ensure that the contact carriage is in the central position, thus allowing the spacing screw to be turned to an equal extent in either direction,

should necessity arise. It is only by repeated improper alterations of the contact screws themselves that, with the relay in neutral condition, the carriage could be placed so far out of the central position that the spacing screw could only be turned in one direction.

It is recommended that in all cases of defective regulation the springs should be removed and the relay set neutral. The adjustment by passage of working signals is not so satisfactory, and frequently entails re-regulation after a comparatively short time. The play of the tongue should be as small as practicable, but it is not wise to make the adjustment too fine. On the other hand, too much play seriously " clips " the signals.

Magnetic Circuit of Standard Relay. The magnetic circuit of the standard relay may be conventionally shown as in Fig. 123*. When there is no current in the coils the field of the permanent magnet divides between the cores of the two electro-magnets and the tongue is held at rest by a force proportional to the squares of the left f_2 and right f_1 fluxes, i.e. $f_1^2 - f_2^2$. If now a flux F is created by the passage of current the pull

$$\begin{aligned} P &= (F + f_1)^2 - (f_2 - F)^2 \\ &= (f_1^2 - f_2^2) + 2F(f_1 + f_2) \end{aligned}$$

To set the tongue in motion

$$F > \frac{f_1^2 - f_2^2}{2(f_1 + f_2)} = \frac{f_1 - f_2}{2}$$

$f_1 - f_2$ is zero when the armatures are in the midway position when moving from side to side, hence the smaller the play the greater is the sensitivity, but the pressure of the tongue on the contacts is correspondingly reduced.

Tests for Differentiality. The values of the currents to be used to test each type of differentially wound apparatus are given at the end of the descriptions. Test No. 1 (Fig. 126) proves that with equal currents flowing in the two coils, the cores are unaffected. Test No. 2 proves that the current divides equally between the two coils and, therefore, in view of Test No. 1, the coils are equal in resistance.

Resistance and Figures of Merit. Standard relays, both ordinary and neutral, are of two types, the obsolete " A " and the " B " type. The A relay is rather

* *Printing Telegraphs and Mechanisms*, by H. H. Harrison, p. 282.

shorter than the B, and its two coils are wound to 200^{ω} each, while those of the B type are wound to 100^{ω} each. Although the B relay has a lower resistance than the A type, its figure of merit is the same, viz. ·5 mA (coils in series).

The resistance of the B relay in series, i.e. between *D* and *U*-circle, with *D*-circle and *U* strapped, is 200^{ω}, and in parallel, i.e. *D* and *D*-circle strapped, and *U* and *U*-circle strapped is 50^{ω}. To produce the same effect upon the tongue as 10 mA through one coil requires 5 mA through the two coils in series, or a

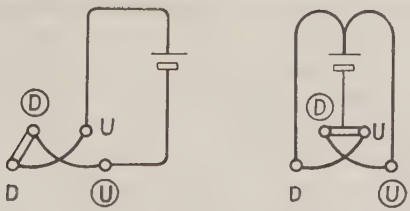

No. 1 No. 2

Fig. 126. Tests for Differentiality

total current of 10 mA, i.e. five in each of the two coils when joined in parallel. The figure of merit of a relay with its coils in parallel is, therefore, twice that with the coils in series.

The softness of the iron of the magnetic circuit is tested by applying a current of 250 mA through the coils in series after which there should be no perceptible traces of residual magnetism. The relay should be differential with 100 mA in series and with 200 mA in parallel. With the coils in series, reliable signals should be obtainable with $\frac{1}{2}$ mA at key speed. With the coils in parallel, and an external resistance of 3200^{ω}, across 1600^{ω} of which a 2 mf. condenser is joined, signals should be repeated satisfactorily at 400 words per min. with 17·5 mA (E.M.F. 60^{v}).

Neutral relays are subjected to precisely similar tests, but with the springs removed.

Relay Standard B Rectangular Base. In order to facilitate the immediate replacement of a faulty or maladjusted relay in an important circuit, the terminals of the relay are extended by contact plates on the outer edges of the base $4\frac{3}{4}$ in. $\times$ $3\frac{3}{4}$ in. These plates engage vertical springs to which the external connections are made. It is, therefore, only necessary to lift the relay upwards from the connection springs on the table and to press another relay into its place. The Creed and other relays have a similar feature.

The G Relay.* The Gulstad relay is essentially of similar design to the P.O. standard relay but without differentially wound line coils. By means of an adjusting screw the electro-magnets can be closed in, or opened out, thus varying the air gaps between the pole pieces and the armatures. Also, it is furnished with two additional windings which are used to keep the tongue of the relay vibrating between the contact points at a constant speed adjusted to be approximately equal to the speed of the reversals of the distant transmitter. The function of the line current passing through the main windings is merely to arrest or suppress the vibration of the tongue maintaining it on *S* or *M* according to its direction. In this way the work of moving the tongue from side to side is performed by the auxiliary windings and local battery. One reason for the lack of sensitiveness in an ordinary relay is the magnetic attraction between the armature and the nearer pole piece of the electro-magnet ; so that, although a current may cease and even be changed in direction, some little time will elapse before the reversed current will have risen sufficiently in value to cause the armature to move towards the opposite and more distant pole piece of the electro-magnet. This defect is considerably reduced by the vibrating

* " The Gulstad Relay " by E. Lack, *P.O.E.E. Journal*, Vol. VII, p. 183, *ibid.* " The Standard G Relay," by A. H. Roberts, M.B.E., Vol. XIII, p. 21–23.

tongue and results in a sensitiveness several times greater than that of the ordinary P.O. standard relay. It has been found to be possible to work circuits having a KR as high as ·75 second, with the vibrating relay. A speed of 200 words per minute has been obtained with a current of only $\frac{1}{2}$ mA in the line coils.

The windings of the P.O. standard relay are altered to obtain the additional or auxiliary windings required to employ the Gulstad principle, and the relay is then officially designated a "G" relay. The resistance of the main windings is $100^{\omega} + 100^{\omega}$ and that of the auxiliary or local coils also $100^{\omega} + 100^{\omega}$.

The vibrating relay increases the working margin on long distance fast speed Wheatstone circuits, and on some of the lengthy underground and submarine cables the average rate of transmission is improved by 50 per cent. By fitting G relays on the London-Newcastle quadruple duplex Baudot, the repeater formerly required at Warrington was dispensed with and direct working established. The length of the circuit is 358 miles, and its KR 103,700. In several cases bridge duplex sets have been converted to differential duplexes —not the least of the advantages of which is that the duplex balance is rendered easier for day to day adjustment. When the steady current in the line circuit is kept below 10 mA there is a tendency to register false signals by vibration of the instrument table, but this has been prevented in such cases by supporting the relay on spring trays similar to those used on Baudot sets with weight-driven type of distributor.

The *principle* of the method by which the tongue, when uncontrolled by the line coils, is kept in a constant state of vibration between S and M is illustrated in Fig. 127. Positive and negative voltages are connected to M and S, T is joined to the split of an ordinary standard relay adjusted to neutrality, D and U-circle being connected respectively to an adjustable earthed condenser and a set of resistance coils. Imagine that

the tongue, moving over from M to S has just reached S. The negative voltage is thereby applied to the split of the relay and there is instantly a short heavy rush of current through the plain coil in the spacing direction to charge the condenser in the direction shown. At the same time, an opposing current commences to flow in the marking direction through the circle coil of the relay. But, the short heavy rush overpowers the steady current while it lasts, thus, increasing the pressure or impact of the tongue on S. Immediately it has died down the steady marking pull of the opposing current through the circle coil asserts itself, and the tongue commences to move towards M. The moment T breaks contact with S the condenser discharges in the marking direction through both windings of the relay in series with the resistance G thus accelerating the motion of the tongue towards M. When the tongue reaches M the positive voltage is applied to the split of the relay and the short heavy rush of current charging the condenser in the reverse direction momentarily preponderates over the current through the circle coil of the relay, thus increasing the firmness of the contact between T and M. The steady spacing current through the resistance G takes charge as soon as the rush of current to charge the condenser is over and the tongne is urged towards S; on T breaking contact with M the condenser current through both coils in series

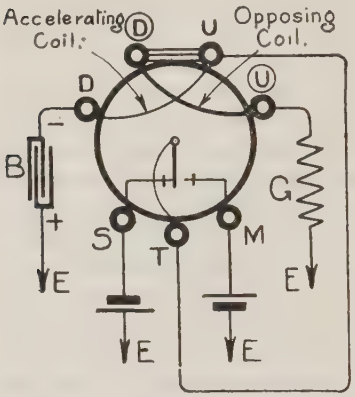

Fig. 127. Principle of Method of Vibrating the Tongue of the Relay

accelerates the motion of the tongue to *S*. This process is repeated successively and the tongue vibrates between *S* and *M* at a rate depending on the voltage used, and the values of the capacity of the condenser and of the resistance.

The "G" relay consists of a P.O. standard relay having in addition to its ordinary coils *D*, *U*, and *D*-circle, *U*-circle, an extra differential winding on its electro-magnets arranged in accordance with Fig. 128,

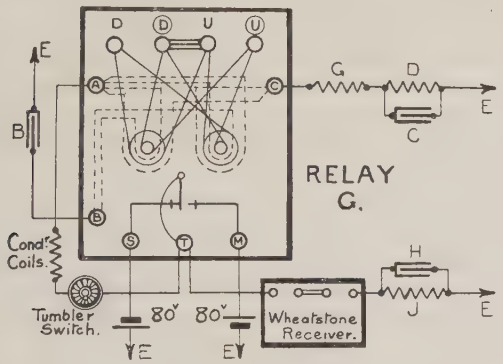

FIG. 128. G RELAY

and connected to three terminals *A*, *B*, and *C*, as shown diagrammatically in Fig. 129. The rate of vibration is made equal to that of the reversals of the distant transmitter, and on very long circuits it is important that the rate at which the local currents rise in the auxiliary windings should correspond as closely as possible with the received line currents. When these conditions have been secured, the line current effect being slightly greater than the local current effects, the vibration of the relay is controlled by suppression of vibrations, and the tongue is surrendered to local forces. When the line current falls below the value of the local current in the opposing coil the relay tongue is set in motion, and it is this anticipatory effect which is so

valuable. On very long lines it is only the dashes which have any real controlling effect, the dots being of such a small current value that the relay inserts them automatically.

The function of the condenser is (*a*) to hold the tongue momentarily against whichever contact it may be touching, (*b*) to accelerate the transit of the tongue between the contacts and (*c*) to give firm reliable contacts due to the vigorous impact of the tongue on the contact points breaking down any film of oxide and assuring definite contact more rapidly than if the tongue were controlled by the relatively feeble line currents. The transient holding effect also ensures quick establishment of definite contact by preventing the rebounding of the tongue at the moment of impact with the contact. One other advantage of the Gulstad principle is that the local accelerating and opposing coils take charge of the movement of the tongue of the relay during the zero interval, i.e. during the period of time when the line current is changing in direction and the tongue of the relay is necessarily surrendered to any induced or leakage currents which may be present from other circuits. In practice, it is usually the case that an amount of current equal to about 1 mA rapidly changing in direction is present. This may be observed by setting the relay neutral on any long circuit, and noting the resulting chattering of the sounder when the relay is joined to line. The G relay effectually obviates this, and there is, therefore, no necessity for the definite spacing bias always used in practice on double current circuits.

The details of the practical arrangement of the G relay are shown in Fig. 129. The two condenser coils in series *AA* determine the rate of charging of the condenser *B* in series with the accelerating coil. The resistance in series with the opposing coil in Fig. 127 is replaced by a set of condenser coils *G* and a shunted condenser consisting of condenser coil *D* and a

condenser *C*. The Wheatstone receiver worked in the local circuit from T has a shunted condenser consisting of a fixed resistance J and a condenser H, the function of which is to balance the inductance of the receiver. The manner in which these resistances and capacities are arranged is shown in Fig. 129, lettered to correspond with Fig. 128. The terminals *D*, *D*-circle, *U* and *U*-circle of the G relay are joined up in place of the standard relay or Wheatstone receiver according to the type of circuit in question. For a quadruplex circuit, the Wheatstone receiver in the local circuit would, of course, be replaced by a standard relay. In the case of a bridge duplex circuit the G relay would take the place of the Wheatstone receiver, but the shunted reading condenser would be retained in series with the line coils of the G relay.

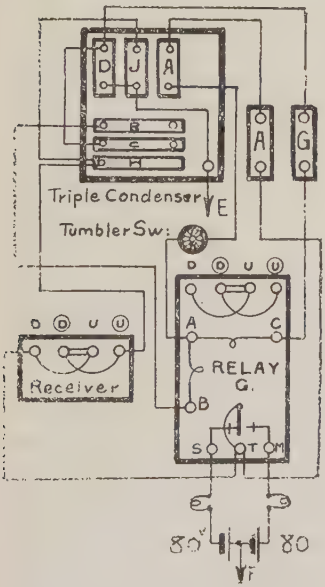

Fig. 129. Actual Connections of G Relay

The determination of the best values of resistance and capacity on a new circuit requires a certain amount of experiment, but the values once found remain fairly stable, and the day to day variations are small and are quite readily effected. If the local control is stronger than the line current the dashes will be split and the slip will in extreme cases show dots only. If the rate of vibration is higher than the rate of the incoming reversals the relay will tend to operate too much in advance of the transmitter, and either the signals or the spaces between the signals will be clipped depending upon the slight bias prevailing, it being impossible in practice to secure an absolutely neutral adjustment of the relay. If the rate of vibration

is too slow the relay will not anticipate the action of the distant transmitter, and although it will still work with reduced transit time and with definiteness of contact, the working speed will have to be reduced if this is approaching the speed limit of the circuit.

Before switching the G relay on to the line it should be set to vibrate at about the right speed. This may be ascertained by noting the length of slip run out in a given time, and counting the number of dots recorded. When the relay is joined to line, a test slip consisting of groups of 12 dots, 12 dashes, and words such as " to-morrow " and " selective " should be passed through the distant transmitter. The resistance *A* should be decreased until the dashes split and then gradually increased until the dashes are restored. If the signals are clipped the capacity in *B* and the resistance in *A* should be increased, whilst if the dashes run together with the dots good or the dots too small but the dashes right, the resistance in *G* should be increased, while that in *A* and the capacity of *C* should be decreased.

On a bridge duplex circuit a reading condenser is provided in series with the line coils of the " G " relay, and correct adjustment may be obtained by reducing the capacity if the signals tend to break up into dots of irregular size or by increasing it if the signals tend to run together.

The correct adjustment of the speed of vibration may be verified by superposing two slips taken at the same receiver speed, one with the line controlling the relay, and the other with the line removed from the relay. The dots recorded when the relay is uncontrolled should be somewhat longer and slightly further apart than with the line connected. This indicates that the vibration of the relay is slightly slower than the distant transmitter (a condition rendered necessary owing to the impossibility of securing absolutely neutral adjustment of the relay), and if left to itself the relay would alternately get into and out of step with the transmitter reversals. Immediately the line current is switched on to the relay, this want of unison is corrected as the relay is rapidly pulled into step and so maintained.

The day to day adjustments which may be necessary are best made by fixing *A* on a current value basis which should be slightly less than the line current, and then altering the rate of vibration by varying *B*, *C*, and *D*.

To increase the rate, reduce *A*, *B*, *D*, or *G*, or increase *C*.

To reduce the rate, increase *A*, *B*, *D*, or *G*, or reduce *C*.

If the condensers are correctly adjusted, the reversals should be regularly spaced when the speed of vibration is slightly varied by increasing or decreasing *A*.

The values of the various quantities are given as an example below—

Res. or Capacity	GW-BE (quadruplex)	GW-DN (differential duplex)	GW-BM (bridge duplex)
A	2,350 ω	500 ω.	2,000 ω.
D	700 ω.	700 ω.	3,000 ω.
G	300 ω.	50 ω.	200 ω.
J	1,000 ω.	6,000 ω.	6,000 ω.
B	7 mf.	7 mf.	5 mf.
C	3 mf.	3·75 mf.	7·5 mf.
H	·5 mf.	1·5 mf.	1·5 mf.
E	——	——	7·5 mf.
F	——	——	8,000 ω.

The coil *G* is only required on P.O. lines in exceptional circumstances, usually where a moderately slow speed is required, which could not otherwise be satisfactorily obtained. A slight increase in the resistance *G* has a marked effect in slowing the speed of vibration.

Residual magnetism in the cores of the electro-magnet is fatal to the good working of the instrument, the highest quality of soft iron is therefore used, and is tested after winding for magnetic balance. Very considerable improvement in this respect has been effected by the annealing process (described on page 91), which is now applied to the cores of all " G " and " H " relays. A minor improvement in detail consists in protecting the connection from the coils to the terminal plate by a short length of flexible insulating tube near the plate to prevent possibility of the connections being damaged by the edge of the permanent magnet.

Modified Vibrating Circuit. When the " G " relay is used on a repeater as a transmitting relay, with its tongue directly connected to line, there is sometimes a certain amount of sparking at the relay contacts when transmitting on long cable circuits. Such sparking seriously interferes with the regular vibration of the relay and in such cases it is necessary to remove the tongue of the " G " relay from direct connection

with the line by adding a transmitting relay worked from the local circuit of the " G " relay.

It has been pointed out* that the presence of a leak circuit on the tongue of a vibrating relay has an effect upon the frequency of the vibrations as the condenser B during its discharge feeds all the parallel circuits. There is also a tendency to sparking owing to reactions in the teed circuits. This necessitates a wider air gap and consequent loss of sensitivity. A modified arrangement of the auxiliary circuit, Fig. 130, has been devised in which the local apparatus, Wheatstone receiver, or relay for Creed, etc., is placed in the inductive branch of the vibrating circuit. The tumbler switch normally placed between the tongue of the relay and A is replaced by a two-position switch. In its normal position the switch puts the relay tongue directly to the Wheatstone receiver and CD becomes the shunted condenser used in Wheatstone working.

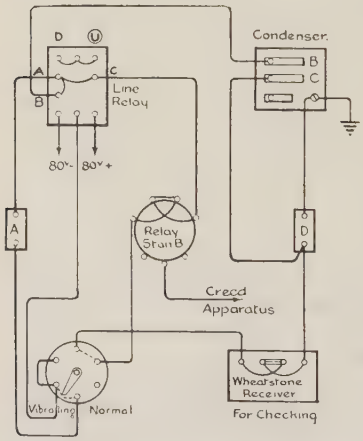

FIG. 130. MODIFIED VIBRATING CIRCUIT FOR CREED CIRCUITS AND TELEPRINTERS

Relay Standard H. This relay is a standard B relay with two complete sets of differential windings each $65^{\omega} + 65^{\omega}$ as well as $100^{\omega} + 100^{\omega}$ vibrating coils. The twelve terminals are connected to contact plates on the rectangular base to facilitate changing.

The double differential winding enables the ordinary secondary earthed cell battery power to be used on loop

* " An Oscillograph Investigation of the Gulstad Relay," by S. S. Richardson, D.Sc., *Proc.I.E.E.*, Vol. 60, p. 921.

circuits, and thus saves the expense involved in the provision and maintenance of separate batteries for each circuit.

P.O. Standard Relay, fitted with Flexible Contacts. Contact chatter of the relay is avoided by the use of two nickel silver springs, 10·5 to 11 mils thick by 160 mils deep, carrying the armature contacts. These two springs are bent at the free ends and so tensioned that they touch and rest upon one another with a fixed pressure between them. By this construction the mass of the moving end of the armature is kept as small as possible, so that at the moment of impact any tendency to rebound is thereby reduced. When the armature contact strikes the fixed contact one armature contact spring is displaced with respect to the other spring, causing the ends of the springs to rub against each other. This rubbing action tends to damp out the rebound, as the energy of impact is absorbed by friction between the two springs.

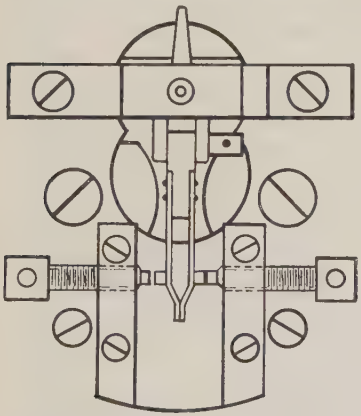

Fig. 131. P.O. Standard Relay, fitted with Flexible Contacts

New Types of Relay. The P.O. standard relay, given adequate working current, has been proved to be capable of transmitting satisfactory signals at a speed of over 1000 words per minute, or about five times the speed which is ever required in present-day practice. But, the tendency is towards the use of metallic circuits in telephone cables, and it is, therefore, imperative that relatively small currents and voltages should be used to prevent interference with the

telephone circuits. This has led to the demand for more sensitive relays. The Gulstad principle applied to any form of relay gives much greater sensitivity, but this alone is not sufficient, consequently several new relays have recently been developed and three examples of these are given. It should, however, be added that the P.O. standard relay with specially annealed cores and with spring contacts, constitutes a very definite improvement. Voice frequency telegraphs also demand sensitive relays, and it is not too much to say that these systems have greatly benefited by their use. The "H" relay circuit is excellent for suppressing any external interference, but, unfortunately, it is particularly virulent to telephone circuits in the same cable, when worked with appreciable voltages. Here, again, the solution lies with relays of high sensitivity.

FIG. 132. CREED RELAY

It should, moreover, be appreciated that the speed of working on any long circuit is a function of the sensitivity of the receiving relay. This is exemplified by the results attained by the substitution of "G" relays for the ordinary P.O. standard relays.

The Creed 1927-type Relay. This relay (Fig. 132) is a particularly beautiful example of the instrument maker's art. The armature is of laminated stalloy and is centrally pivoted within the fixed working coils. The pole pieces are also of laminated stalloy and are magnetized by a very heavy bar magnet placed across their lower extremities. The four air gaps are very small; the contact arm extends $1\frac{1}{2}$ in. beyond the armature and its angular movement is twice that of the top of the armature itself.

The magnetic circuit of the relay is illustrated in Figs. 133 and 134. The flux from the permanent

magnet divides between the upper and lower pairs of air gaps as shown. When current is passed through the coils, the flux due to the current must be greater than the portion of the flux from the permanent magnet passing via the upper nearer pole piece down the armature and the lower nearer pole piece. When this condition is fulfilled the armature snaps over with

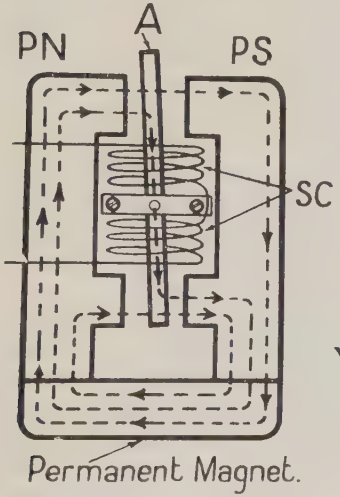

Fig. 133. Magnetic Circuit of Creed Relay

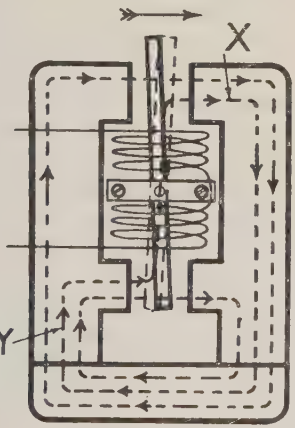

Fig. 134. Effect of Current in the Coils

ever-increasing velocity. Since the angular motion of the armature is very small and the variation in the air gaps, as the result of motion of the armature, is also small, the flux passing through the armature vertically is relatively small and the relay is, consequently, very sensitive. The contact arm is held firmly on the contact after deflection by the attraction of the nearer pole piece faces. It will, however, be appreciated that as the play of the armature is reduced, the contact pressure is also reduced whilst the sensitivity correspondingly increases.

The relay coils can, of course, be wound to any desired values. The $25^{\omega} + 25^{\omega}$ type has 1200 turns of wire and an inductance of 2 to 2·5 henrys at 40 cycles depending on the value of the current and on the play of the armature.

The contact screws are provided with large knurled heads marked in numbered divisions corresponding to 2 mils on the contact gap and with unengraved divisions corresponding to 1 mil. Hence, it is always possible to know just what play is being used. The bias adjustment is by means of a screw at the base, which moves the permanent magnet and pole pieces bodily to right or left. This screw is marked with a zero arrowhead to indicate centrality and with arrows to show the direction of movement for marking or spacing bias as may be required. Hence, in setting up the relay, the bias screw is placed centrally and the contact points adjusted to neutrality with the desired play.

The transit time is approximately proportional to the play of the contact arm and is almost independent of the speed of working and current through the coils, always provided that the current is adequate to produce good signals. At 200 words per minute, the transit time is ·001 sec. approximately, which gives a contact making time of 84 per cent and a correspondingly larger percentage at lower speeds.

The $25^{\omega} + 25^{\omega}$ relay will work well at 200 words per minute with a current of about $2\frac{1}{2}$ mA.

The connections of the relay terminate in projecting screws which make contact with springs in the base to which the apparatus connections are soldered. Hence the replacement of a relay can be effected without appreciable delay.

The No. 209 F.A. Polarized Relay.* This instrument (Fig. 135) was developed in the Bell Telephone

* " Polarized Telegraph Relays," by J. R. Fry and L. A. Gardner, at the Midwinter Convention of the A.I.E.E., New York, 9th to 12th February, 1925.

Laboratories. Fig. 136 shows the magnetic circuit and the arrangement of the relay elements. The magnetic circuit is arranged Wheatstone bridge fashion, the four air gaps corresponding to the four resistances, with the permanent magnet taking the place of the battery and

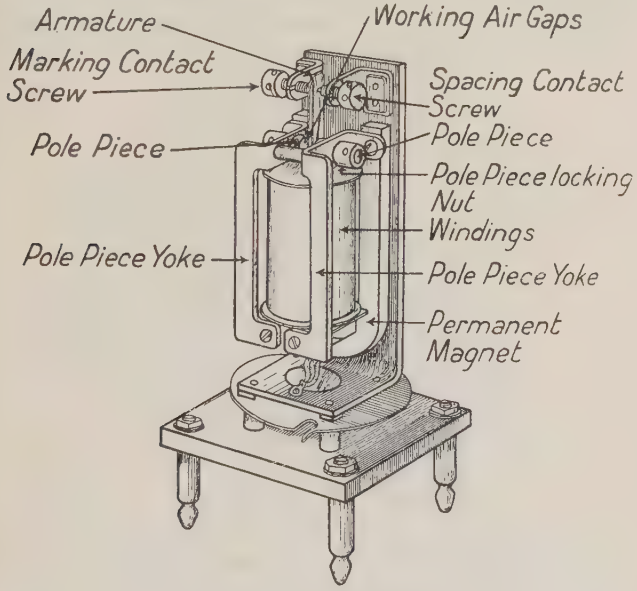

Fig. 135. No. 209 F.A. Polarized Relay
(cover removed)

the armature and windings in the position occupied by the galvanometer.

The operating windings are placed over the armature in the form of a single stationary bobbin, sufficient clearance being provided to allow the armature to move within the coil.

The paths of polarizing and operating fluxes are shown by the solid and dotted lines respectively when the armature is in its midway position. In this position there is no polarizing flux through it, since it connects

two points of the circuit of equal magnetic potential. As it moves towards the left pole piece the polarizing flux flows through it in a direction assumed to be positive, and when it moves towards the right pole piece the polarizing flux flows in the opposite or negative direction.

The operating flux in addition to the two return paths shown through the yokes has a third path

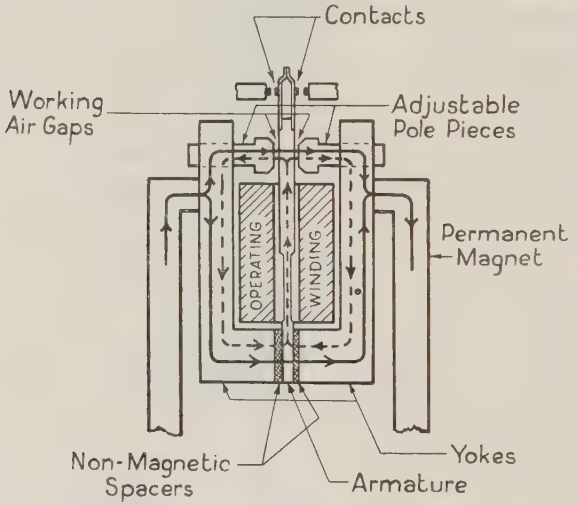

FIG. 136. MAGNETIC CIRCUIT AND ARRANGEMENT OF RELAY ELEMENTS

through the permanent magnet, but substantially none of this flux returns by this path, due to the high reluctance of the permanent magnet, as compared with that of the yokes.

These fluxes aid and oppose each other in the four gaps, in such a manner as to produce a torque on the armature, about a point midway between the upper and lower sets of air gaps.

With the direction of the fluxes shown, the armature would tend to move in a clockwise direction. The forces

established in all four of the gaps can be utilized in moving the armature only when the latter is movably supported at a point midway between the upper and lower gaps.

In the design of this relay the armature is not supported at this point, but is firmly clamped and supported at the lower gaps between the yoked non-magnetic spaces forming proper reluctance to prevent

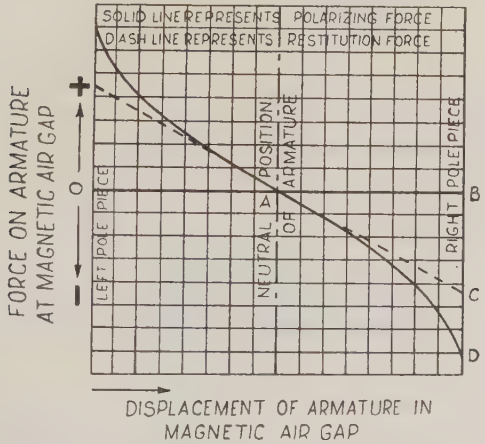

Fig. 137. Curve showing how Polarizing and Restitution Forces Vary with Position of Armature

a short circuit in the permanent magnet. This method of suspension of course prevents the forces established in the lower gap from doing useful work on the armature, but it simplifies the design by eliminating pivots and utilizes a single bobbin construction instead of a two-coil arrangement. Moreover, the stiffness of the armature is utilized to neutralize the polarizing force acting on the armature, thereby increasing the sensitivity of the relay (Fig. 136). The pole pieces and armature of the relay are made of " Permalloy," which has a very low coercive force, and this results in almost

complete collapse of the operating fluxes, when the magnetizing force is removed. This tends to reduce distortion of repeated signals, since the relay is less affected by the previous magnetization to which it may have been subjected by the preceding signal. On account of the higher permeability and the smaller residual effects of the material, the sensitivity of the relay is increased. The relay is provided with six separate windings, four are employed as line windings and two as auxiliary windings to produce the Gulstad vibration. Four insulated copper wires are twisted together and then wound as a single conductor on the relay bobbin. Two conductors are wound in parallel on the top concentric with the line windings.

One of the features of the design of this relay is the arrangement which permits of ready removal from the circuit. The square base of the relay is provided with four guide points which definitely locate the relay with respect to the mounting plate and the connecting plug, and it is also furnished with fifteen terminals on which the electrical connections of the windings and contacts of the relay are terminated.

Using the four double differential line windings in series, the relay has a resistance of 800^{ω}, and with a total armature play of 4 mils (2 mils each side from the central position) the relay will work at key speed with ·13 mA. The Gulstad windings are $115^{\omega} + 115^{\omega}$.

The adjustments of this relay are critical and it is seriously affected by small stray magnetic fields: hence magnetic screening is essential in an ordinary instrument room.

The No. 215-type Relay (Fig. 138) is a simplified form of the 209 FA relay for use where the operating conditions are not sufficiently exacting to warrant the use of a relay of the 209 type.

It employs the same type of magnetic circuit as the 209 FA, and the same design features of mounting and chatterless armature springs are also incorporated.

It does not have such refined adjusting figures nor will it operate with such small currents.

It is provided with two balanced line windings.

	Operating Current	Resistance
No. 215 A	·001 amp.	110ω } in 110ω } parallel
No. 215 B	·0004 amp.	1400ω
No. 215 FA	·0005 amp.	600ω
No. 215 FB	·0003 amp.	1400ω

The Nos. 215 FA and 215 FB both have high permeability cores, the No. 215 FB being an exact replace-

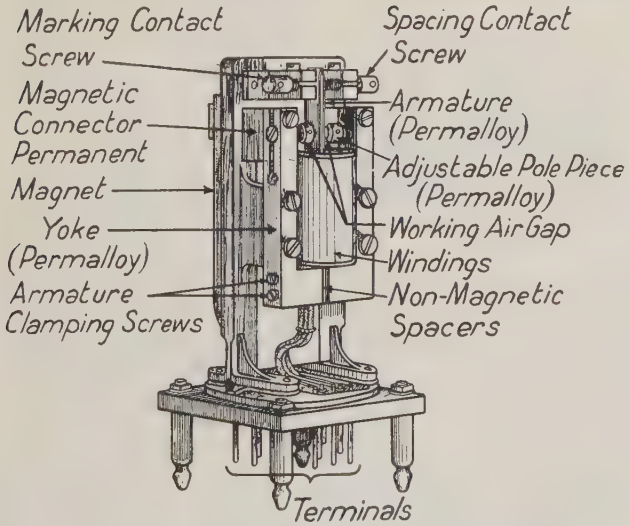

Fig. 138. No. 215A Relay (cover removed)

ment of the No. 215 B, the high permeability core allowing the operating current to be reduced from 4 mA to 3 mA.

Siemens-Halske Relay. This relay is developed from

the original Siemen's relay, but has been designed to give much higher sensitivity. This has been accomplished by increasing the space available for the windings and by lightening the armature. The coils (Fig. 139), which are wound on soft iron cores, are disposed on either side of the vertically pivoted armature. These cores pass through the two split ends of a soft iron yoke, which passes under the base and magnetically connects them. The L-shaped permanent magnet is disposed between the back of the armature and the centre of the connecting yoke. Hence, the magnetic circuit is as shown

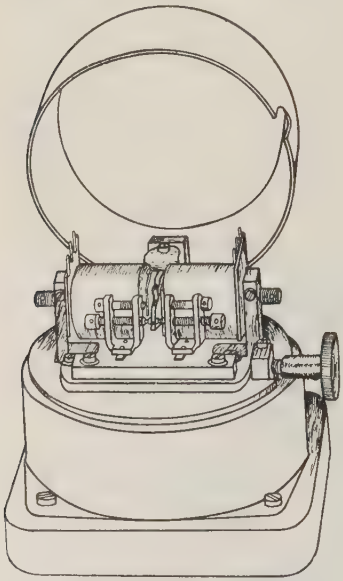

Fig. 139. Siemens-Halske Relay

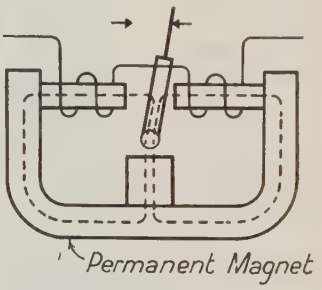

Fig. 140. Magnetic Circuit

diagrammatically in Fig. 140. The cores of the electromagnets are each adjustable so that the distance from the armature may be varied. When adjustment has been effected it is made permanent by the locking screws on the extremities of the yoke. The distance between the upper end of the permanent magnet and the back end of the armature can also be varied at will. The contact screws are placed on a carriage

which is moved bodily by the large knurled screw on the right to obtain the desired degree of bias or of neutrality. The contact screws are locked against the effects of percussion by the contact arm by tightening the screws on the upper portion of the U-shaped bearing.

In order to obtain the greatest sensitivity the relay is set neutral with the minimum armature play, and the distance between the permanent magnet and the end of the armature increased. This latter adjustment increases the transit time and reduces the contact pressure. Hence, in general, the best adjustment is a compromise between these divergent conditions.

With a 300^{ω} winding the relay functions at high speed with a current of from 2 to 3 mA without appreciable armature chattering.

The connections of the relay itself terminate in knife blade contacts which enter pairs of springs in the base, thus enabling immediate replacement of a defective or maladjusted relay to be effected.

The relay may, of course, have double differential and Gulstad windings to any desired values.

Prevention of Sparking at Relay Contacts. Electromagnets which are energized in a local circuit are usually provided with a non-inductive shunt to prevent sparking at the relay contacts. For example, the 20^{ω} sounder has a 21^{ω} coil with a 420^{ω} non-inductive shunt, i.e. a double-wound coil which is accommodated on a small boxwood bobbin beneath the base. The effect of inductance is to oppose the rise of the current upon making the circuit. But, on breaking the circuit, the collapsing of the lines of force due to the current cuts through the windings and generates an E.M.F. in the same direction as that due to the battery. At the moment when the circuit is broken this E.M.F. adds to that of the battery, and the result is a spark. The shunt across the sounder provides a path for the current due to the E.M.F. of self-induction, other than that through the battery and slightly broken contact. The

result is that the E.M.F. between the tongue and the contact point is reduced to a minimum, and sparking with its resultant wearing and roughening of the contacts is avoided.

The resistance of the shunt should, in general, amount to not less than 10 to 15 times the resistance of the electro-magnet, otherwise the current due to the inductance through the shunt will appreciably lengthen the signal. The shunt on the auto-relay is used for this purpose and is equal in resistance to the coils.

A condenser placed across *T* and *M* or across an electro-magnet will suppress the spark at break, but, owing to the heavy current which flows just at the point when contact is being made, a welding effect takes place. Hence, a condenser should have resistance placed in series with it to cut down the maximum current if it is necessary to use it across relay contacts. A small condenser with a resistance in series constitutes another method of spark suppression. Where the energy in the local circuit is considerable or the current exceeds 100 mA, this method is generally adopted, as, for example, with the power relay in Creed circuits. (*Vide* Chapter XII.)*

Design of Relays. The desiderata are sensitivity, rapidity of action, and adequate contact pressure. The magnetic circuit must be so designed as to ensure that the effect of the operating flux shall instantaneously disappear with the cessation of the operating current. The magnetic circuit must be arranged so that the molecular movements which produce magnetization and demagnetization are facilitated to the utmost extent; in other words ,the formation of anything which approximates to a closed magnetic circuit

* "Sparking and Arcing at Relay Contacts and the Use of Spark Quench Circuits," by A. H. Jacquest and L. H. Harris. A paper read before the I.P.O.E.E., 13th Dec., 1927, gives the results of a series of researches on this subject. The paper is, however, chiefly concerned with automatic telephone circuits, where the current to be broken is of the order of 1 amp.

must be prevented, an air gap or air gaps are, therefore, essential to avoid large values of residual magnetism. Where iron is used, it should be of the softest possible description, but in general, definite advantage will result from its replacement by stalloy or, in certain cases, by permalloy or mumetal. If the magnetic material is not of the best quality, the relay cores become polarized and bias results. This in turn increases the contact chatter. Moving parts may with advantage be laminated to reduce eddy current effects and in this connection the higher specific resistance of stalloy and permalloy possesses definite advantage.

The weight and its distribution in the moving system is of vital importance where rapidity of action, as in high speed working, is essential. A given force produces a movement the velocity of which is inversely proportional to the moment of inertia of the moving system. Now the moment of inertia is the mass of every particle of the moving system multiplied by the *square* of its distance from the centre line of the pivot. Hence, the armature should be made as light as is consistent with its magnetic duties and its weight should be concentrated as near to the pivot as possible. The contact arm should be as light as mechanical considerations permit and should be as long as is consistent with the attainment of adequate contact pressure. If the length of the contact arm from the pivot is twice that of the armature, the angular movement of the contact arm is twice that of the armature, but the contact pressure is reduced as compared with that of a contact arm of equal length to the armature.

With any given type of relay the transit time for a given value of current can, from considerations of mechanics, be shown to be proportional to the square root of the play, hence by doubling the play the transit time is multiplied by $\sqrt{2} = 1{\cdot}414$. To obtain the highest degree of rapidity, the play should be reduced

to the minimum possible, and the relay should, moreover, be set neutral.

Sensitivity and contact pressure are divergent qualities and, in many cases, the attainment of the highest sensitivity is precluded by the feebleness of the contact pressure.

The figure of merit of any given type of relay approximately varies inversely as the square root of the resistance of the coils assuming that they are of equal volume in the two cases. The inductance is roughly proportional to the resistance.

The resistance and inductance of the relay for a given sensitivity should each be as low as possible.

It is also important that the rebound of the contact arm from the contact screws shall be reduced to a minimum. This may be secured to some extent by the use of a flexible contact arm or by the use of double springs, but mainly it is best modified by cutting down the operating current to a value which will only just secure satisfactory signals.

A relay with its coils in parallel has a quarter of its resistance and inductance with its coils in series, but its figure of merit is doubled. Its time constant (L/R) is the same in either case.

Other Types of Relay. Johnsen and Rahbek* discovered that appreciable adhesion occurs between two bodies in contact when a difference of potential exists between them. A relay embodying the principle of electro-adhesion has been made up and has functioned satisfactorily at a speed of 600 words per minute. A light and flexible nickel-steel band rides on the upper half of a rotating agate cylinder. When a certain critical difference of potential is created between the band and the metallic centre of the agate, adhesion occurs, and a vigorous pull is exerted on the band, the movement of which is controlled by suitable stops used as local contacts. The current required is inappreciable; the voltage required for operation may be made as little as 10^{v} by applying a permanent

* "A Physical Phenomenon and its Application to Telegraphy, Telephony, etc.," by A. Johnsen and K. Rahbek, *I.E.E. Journal*, Vol. 61, No. 320, page 713, July, 1923.

voltage which the 10^{v} augments. The principle may have important practical applications in many directions.

A somewhat similar effect, but magnetic in character, has recently been developed to form the basis of a relay.* It consists essentially of an iron drum with an annular recess in which are situated one or more coils of wire the ends of which are connected to slip rings. The drum is mounted on ball bearings and its periphery, which is shod with cast iron rings, is machined to run true to ·0001 in. A small iron or steel shoe fits accurately the curvature of the rings. When a current passes through the coil the drum is magnetized, and this causes the shoe to be pressed on the rings with considerable force. Thus, if the drum is revolved a pull is required to cause the shoe to slide relatively to the rings. This pull is of the order of 50 times as much as would have been expected without the cohesive effect due to magnetization. The drum is revolved by a small motor at a speed of 150 to 250 revolutions per minute and with a coil resistance of 600^{ω} a record has been taken at 2500 words per minute.

The Single Current Sounder. Before the advent of the polarized sounder, this system was used where direct working with 20^{ω} sounders required extravagant battery power. A P.O. standard relay with the sounder in the local circuit was employed (Fig. 141). On all but the shortest and least busy circuits double current working is for traffic reasons now invariably adopted.

The Double Current System. In the single current system the tongue of the relay is restored to the normal position upon cessation of the current either by a magnetic bias, or by a spring in tension if non-polarized relays are used. In the double current system a polarized relay is essential, since a current in the reverse direction to the marking current is employed to restore the tongue to the spacing side. This current is termed the "spacing" in contra-distinction to the "marking" current, i.e. the current which causes the completion of

* "The Application of a Revolving Magnetic Drum to Electric Relays, Siphon Recorders, and Radio Transmitting Keys," by N. W. McLachlan, *I.E.E. Journal*, Vol. 61, p. 903.

† "Additional Applications of the Magnetic Drum Principle," by N. W. McLachlan, *ibid.*, Vol. 64, p. 671.

the local circuit. The difference between a series of signals sent under the two systems is that in the double current arrangement the blank spaces between the " marking " currents of the single current system are filled by a reverse or spacing current. At rest the key sends out a spacing, and when depressed a marking

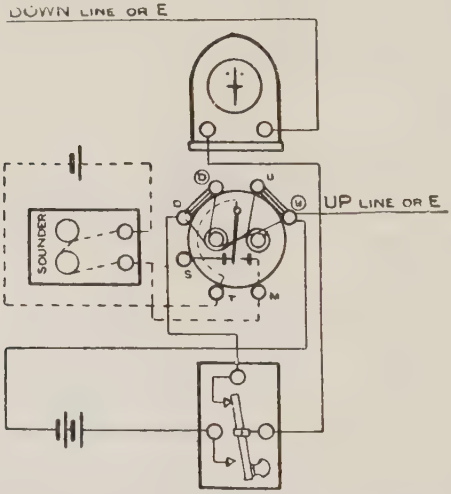

Fig. 141. Single Current Sounder Connections
(The relay should generally be joined up in series)

current, which latter is in the same direction as that in the single current system.

Advantages of Double Current System. The use of the double current system upon long lines increases the speed of working, and gives greater permanence of adjustment as compared with single current working. The causes of these advantages may be summarized as follows—

1. It hastens the discharge of the line which is ordinarily comparatively slow.

2. The relay is worked in the neutral, and, therefore, in its most sensitive and rapid condition.

3. It eliminates the effects of residual magnetism in the cores of the receiving relay.

4. The effects of a variation of received current are reduced since both marking and spacing currents are equally affected, and the instrument is, therefore, self-adjusting.

Reverse Current and Charge upon the Line. In order clearly to realize the effect of the spacing current it is necessary to consider the effect of the capacity of the line upon the working of a circuit.

A condenser has been defined as two conductors separated by an insulating medium, and it will, therefore, be seen that any telegraph line may be regarded as a condenser. The aerial line wire itself forms one conductor, and the earth below it the other. These two conductors are separated by air, and there are, therefore, all the essential features of a condenser. In the case of a subterranean or submarine cable the wire and the earth are much closer together, and the insulating material which separates them has a much higher specific capacity than air, hence the capacity of an underground circuit is far higher than that of an open line.

When an earthed battery is connected to a telegraph circuit the capacity of the line has to be satisfied before the full value of the current is received at the distant end. The charging of the line as a condenser occupies a definite length of time which is much greater for very long or underground circuits than for short open lines. This phenomenon, viz. the delay in the appearance of current at the receiving end after the connection of the sending battery, is termed retardation. Upon stopping the current the line discharges the quantity of electricity upon it. This discharge current flows from the line at both ends if both are earthed, and at the receiving end it tends to prolong the mark. This is termed prolongation. The discharge is also comparatively slow, and, therefore, on very long circuits, the

interval between successive signals must be made greater in order that the signals may not run together. Very sharp dots would be lost entirely, due to the quantity of electricity sent on to the line being small and insufficient to charge it fully. The small quantity of electricity would distribute itself over the line and a very small discharge current would probably flow out at both ends. That at the receiving end would be quite insufficient to actuate the apparatus.

When the double current system is employed the reverse current hastens the discharge of the line which occurs almost entirely through the sending battery. At the moment when the sending battery is reversed, the reversed E.M.F. of the battery is added to the E.M.F. of the charge on the line, hence the E.M.F. tending to reverse the charge is twice that of the battery employed.

In single current working each individual mark is shortened in the following way. Assume that, on a single current circuit working with 20 mA, the tongue moves over to *M* when the current through the relay has risen to 10 mA. After depression of the key the mark does not commence until the current has risen from zero to 10 mA. On the release of the key the mark ends immediately the current falls to 10 mA. This time is very short as compared with the time taken for the current to rise to 10 mA, and the received signal is, therefore, much shorter than that formed on the sending-key. Consideration will show that a double current signal received on a neutrally adjusted relay is not clipped. In the first place the mark would commence earlier (at, say, 3 mA) due to the absence of bias, and would not end until the current had risen to an equal value (3 mA) in the reverse direction.

Detailed Explanation Involving Knowledge of Chapter IX. The precise behaviour of the reverse current may readily be deduced from a consideration of the principles explained upon page 287 *et seq.* The charge

upon a line due to a marking current from an up station is represented by a triangle similar to that shown in Fig. 155, but drawn above the line as in Fig. 156. If, now, the sending end is suddenly earthed, as by releasing a single current key, the line discharges, two-thirds of the charge flowing to earth at the sending and one-third at the receiving end. This one-third is in the same direction as the marking current, and, therefore, prolongs the signal. Had the battery at the sending end been reversed, instead of earthing the line, more than two-thirds of the whole of the discharge of the line would pass through the reversed battery. This would tend to reduce the prolongation of the signal.

Consider now the case where the line is negatively charged by the spacing current as shown in Fig. 155. Instantly the battery is reversed a heavy current flows from it reversing the sign of the charge upon the line and reproducing the conditions described above. But during this process, rapid as it is, a certain portion of the previous negative charge is dissipated by a negative discharge to earth at the receiving end. This expedites the process of clearing the negative charge before the reverse charge is commenced. The discharge at the receiving end is in the spacing direction.

Other Advantages of the Double Current System. The reverse current reverses the magnetization of the relay, and, therefore, the effects of residual magnetism are minimized.

The advantage stated under the heading 2 on page 264 also carries with it the corollary that less battery power should be required to work double instead of single current, because there is in the former case no magnetic bias to be overcome. In practice, however, a small spacing bias is always given to the relay in order to prevent the sounder from chattering. For, if the relay is set exactly neutral, it is so sensitive that the extremely minute currents induced by neighbouring working circuits or by slight earth or stray currents

will cause the tongue to vibrate. Upon the other hand, if the tongue continuously remains at *M* when the circuit is idle the local battery is needlessly used.

The last advantage, stated under heading 4, is one of considerable practical importance. Since the marking and spacing currents will be equally and similarly affected by a variation in the received current, the instrument is self-adjusting. In the case of a single current set the relay is given a definite and constant bias, and variations in the value of the current received therefore produce irregularity in the received signals. Again, where a number of stations are placed upon one circuit the current sent out by each office varies, and, with the single current system, working becomes practically impossible on account of the re-regulation of the relay which is required for each station. Part of this trouble is, of course, due to residual magnetism. With double current working there is practically no bias upon the relay, and re-regulation is obviated since an office from which a weak marking current is received also furnishes an equally weak spacing current. The office sending a strong marking current also sends an equally strong spacing current, and the working of the relay is, therefore, not affected by the difference. With the single current system a large current would leave a considerable amount of residual magnetism.

Double Current Key. The double current key (Fig. 142) is provided with a switch, which joins up the relay for reception in one position, and in the other connects the battery between the up and down terminals in a direction which depends upon the position of the key. It will be obvious that, since the key when at rest sends out a spacing current, a means of disconnecting the battery and joining up the receiving apparatus must be provided. This is, then, the function of the " send " and " receive " switch fixed upon the left side of the key-handle.

The key is furnished with five terminals, two of which, Z and C, are used for the battery, two for the up and down sides of the key, and one, the centre terminal, for the receiving circuit. The key itself consists of a divided lever furnished with four contact points which play between four gold-silver-tipped springs connected to Z and C. A section of the end of the key with the lever in its lower position is shown in

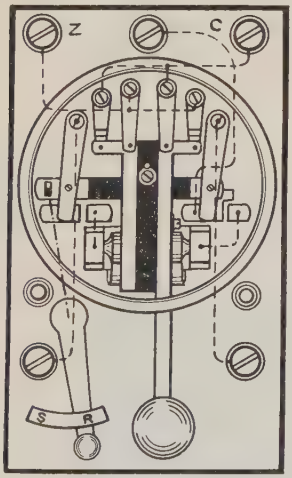

Fig. 142. Plan of a Double Current Key

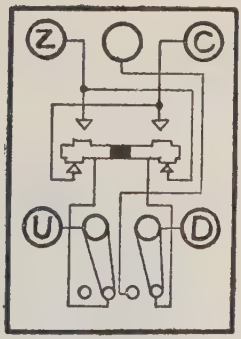

Fig. 143. Conventional Diagram of a Double Current Key

Fig. 143. Terminal C is thus connected through the lower left-hand spring and side of the lever through the right-hand stud of the left switch lever to U. Z is connected via the lower right-hand spring and side of the lever through the right-hand contact of the right-hand switch to D. Upon depression of the key the end rises and the left-hand side of the lever breaks contact with the lower left-hand spring and makes with the upper spring. The right side of the lever, simultaneously, breaks with the lower and makes with the upper

spring, the result being that Z and C are respectively connected to U and D. Upon the handle of the switch being moved to " receive," the two levers of the switch, which are mechanically (but not electrically) joined

Fig. 144. Skeleton Connections in each Position of the Key

together, move over to their left contacts, thus disconnecting the key lever altogether, and joining the centre terminal to D. In the present form of key the

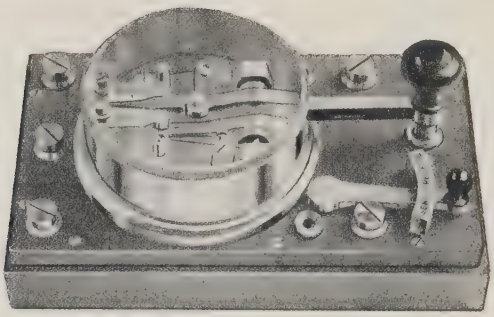

Fig. 145. Double Current Key

four contacts on the divided lever are adjustable contact screws. The skeleton connections in each position of the key are shown in Fig. 144.

Connections of a Double Current Sounder. The galvanometer employed is of the single coil pattern previously described (Fig. 42).

The connections of a double current set are shown in Fig. 146. Z and C are connected to the battery, the

front right-hand terminal of the key is connected to the left of the galvanometer whose right terminal forms the down line terminal of the set. The left side of the key is connected to *U*-circle of the relay which forms the up line terminal of the set. The centre terminal of the key is connected to *D* of the relay. It may be noted that the connections of the single

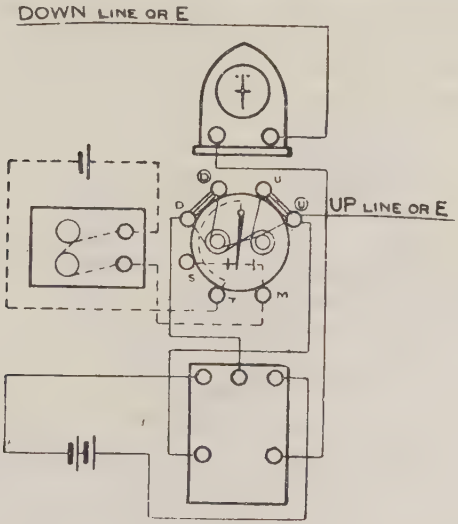

Fig. 146. Double Current Sounder Connections

current sounder set are similar in several respects to those now under consideration. The front right terminal corresponds to the middle point of the single current key and the centre to the back stop. The up and down line terminals of the set are also the same.

When the key is depressed the direction of the current is the same as in the single current set, and with the exception of the difference in the keys, its path also is identical.

The connection of the set to line and earth or between

up and down lines at an intermediate office is the same as that of the other instruments previously considered.

Path of Current. The path of the current with the switch to " send " but key at rest at the up station is as follows. From the positive pole of the battery, to C, to the left terminal of the key, to U-circle, to earth through the down galvanometer from right to left, to the right side of the key, to the centre of the key, to D of relay, through the relay in the direction D to U, to line, through the up galvanometer from right to left, to the front terminal of the key, to Z and thence back

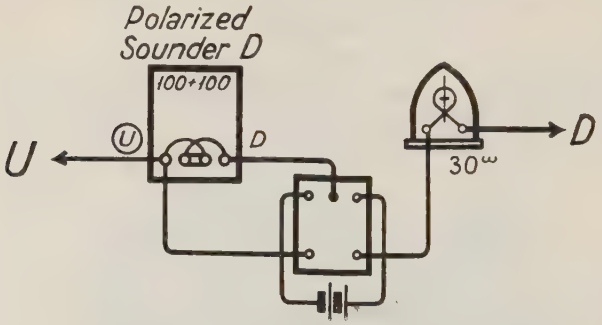

Fig. 147. Double Current Working with Polarized Sounders

to the negative pole of the battery. The tongue of the relay at the down station is, therefore, held over to S. Upon depressing the key the current is reversed and the tongue moves over to M, thus completing the local circuit and registering a mark at the down station.

The correctness of the apparatus connections may be verified by joining the centre of the key and the wire upon it to the right-hand terminal of the galvanometer and working the key, when the signals sent upon it will be received reversed. It should, however, be noted that the connection made by the switch from the right side of the key to the centre is not included in the test.

Battery Power and Current Required. No. 1 Lec. cells are employed for the line battery to furnish a current of 14 to 17 mA. The local battery is a 3-cell No. 1.

The coils of the relay should in general be joined in series. The only case where the coils should be in parallel is when there are several stations on a very short line—the deciding factor being economy of battery power. In this case the current required is twice that used for series operation.

Local Inker. A local inker is sometimes used instead of a sounder, and occasionally it is joined in parallel with a sounder. The instrument (Fig. 111) is similar to the direct inker, but is minus key and galvanometer, and is wound to a resistance of 40^{ω}. A 500^{ω} resistance coil fixed inside the instrument is connected across the terminals of the electro-magnet to prevent sparking at the relay contacts. Its joint resistance is 37^{ω} and its figure of merit 79 mA. The speed of the slip should not be less than 6 ft. nor more than 7 ft. per minute.

Double Current Direct Sounder. Up to a circuit length of 25 miles, the relay and sounder of Fig. 146 are replaced by a polarized sounder D $100^{\omega} + 100^{\omega}$. When correctly adjusted the set will function with a current of as low as 3 mA or as high as 40 mA. The working current required is 15 to 20 mA. The battery power, No. 1 cells, is computed as under—

Number of Offices on the Circuit	Cells for Apparatus	Cells for Line per Mile
Two	4	·015 r.
Three	7·5	
Four	11	

Where r is the conductor resistance per mile.

CHAPTER IX

THE DIFFERENTIAL DUPLEX

Systems of Duplex Working. Duplex working consists n the simultaneous transmission of two messages in opposite directions over a single wire connecting the two stations. There are many methods of doing this, those in practical use being the Bridge method (Chapter XIII), the various Central battery duplex methods (Chapter XI), and the differential method. The differential duplex is the method most largely employed, and it may be worked upon either the single or the double current system. Bridge and differential duplex working may be arranged in two different ways which may be distinguished as " opposition " and " combination " methods respectively. The latter is generally employed by the Post Office, but a consideration of the former also is desirable.

In order to realize clearly the underlying principles in duplex working it will be well to ascertain why the ordinary single current sounder will only permit simplex working. Consider two stations A and B sending the signals depicted in Fig. 148. These signals and spaces are divided into fifteen parts by the vertical lines so as to show the cases in which two marks are simultaneously sent out. In the first place both keys are at rest, whilst in the second A depresses the key and so produces a dot at B. As this key rises B depresses his key and the result is a mark at A. Whilst this mark is proceeding, A depresses his key (4) so cutting out his sounder and stopping the mark which he should be receiving. B's sounder also is cut out by the depression of his key, and therefore no marks are recorded at either end when both keys are down. When only one key is down at a time the signals are, of course,

transmitted without difficulty, but when both keys happen to be simultaneously depressed (4, 5, and 13) confusion at once results.

In the opposition method of duplex working, when only one key is depressed, the marks are made by the current which is received from the distant station, just as in ordinary simplex working. When, however, both keys are simultaneously depressed, a special condition is established which causes both sounders to register a mark.

Opposition Method. The general principle of the opposition method consists in splitting the current sent out by the key into two exactly equal parts which

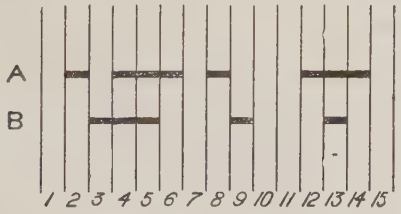

Fig. 148. Signals

respectively pass through the two coils of the sending station's relay. The two currents are of precisely equal strength and pass through the two coils of the relay in opposite directions, so producing no effect upon the sending station's relay. One-half of the current passes to line and through the receiving relay, thus effecting a mark. When both keys are depressed, the two batteries have their similar poles to line. This stops the line current, but leaves the current flowing in the other coil of the relay free to produce a mark. When one key only is depressed, the mark is made by the current received from the sending station, but when both keys are down each relay marks with the current from its own battery, due to the stoppage of the line currents.

The skeleton connections of such a circuit, worked

with standard relays, are depicted in Fig. 149, but it should be noted that the local circuit has been omitted in order to simplify the diagram. The single current key when at rest earths the split of the relay, and when depressed joins up the earthed battery. One coil of the relay is connected to line and the other to a resistance equal in value to the resistance of the line and the distant apparatus. This resistance is adjusted until the current sent out divides equally between the plain and

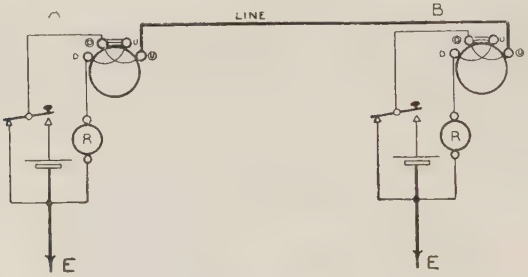

Fig. 149. Opposition Method of Duplex Working

circle coils of the relay. The arrangements at each end are identical in every particular.

Opposition Method, Path of Current. The paths of the current may best be considered by tracing the conditions which result when *A* and *B* send the signals shown in Fig. 148.

Condition 1.—Both keys at rest. Tongue held to *S* by magnetic spacing bias given to the relays. No currents flowing.

Condition 2.—*A*'s key depressed. Current flows from the positive pole of *A*'s battery to the split of the relay. The line half of the current passes through the *D*-circle *U*-circle coil of *A*'s relay, along the line, through the line coil of *B*'s relay from *U*-circle to *D*-circle (thus producing a mark), to the centre of *B*'s key, to earth, and thus back to *A*'s battery. The other half of *A*'s current passes through the plain coil of the relay in

the direction U to D, rheostat R, and so back to the negative pole of the battery. This circuit is termed the "compensation" circuit in contradistinction to the "line" circuit. Since the currents in the line and compensation circuits are equal but in opposite directions the relay is not magnetized and no effect is produced at A. B's relay, however, marks by the current received from A.

Condition 3.—B's key only is depressed. The current from B's battery divides equally between the line and compensation circuits, and as the two halves pass in opposite directions through the two coils of his relay, no effect is produced upon it. A's relay marks with the half of the current which is received from B.

Condition 4.—Both keys simultaneously depressed. Both batteries have their negative poles to earth and their positives to line. Since they are of approximately equal E.M.F. no current can flow through the line or line coils of the relays. The only path left open to the current at A is, from the positive pole of the battery, through his own relay from U to D through the rheostat back to the negative pole of his own battery. Since there is no opposing effect from the circle coil a mark is made at A by his own battery. Similarly B's relay marks by the current from his own battery through UD coil of his relay. Both relays therefore mark.

Condition 5.—Same as condition 4.

Condition 6.—B's key released, A's still down. When B releases his key, B's battery is cut out and A's line current is therefore unopposed. The moment this is re-established A's compensation effect is balanced and his relay spaces thus ending the mark at A. At B the mark is continued by the current received from A. The state of affairs is identical with that of condition 2.

Conditions 7, 10, 11, 15. Same as condition 1.

Conditions 8, 12, 14. Same as condition 2.

Condition 9. Same as condition 3.

Condition 13. Same as conditions 4 and 5.

Intermediate Positions of Keys. There still remains, however, one other point which must be considered. Take, for instance, conditions 3 and 4. It will be seen that, at the beginning of 4, *B*'s key is already down whilst *A*'s key is being depressed, and that there is, therefore, an instant of time in which *A*'s key is touching neither the front nor the back stop of his key. In this case the line current sent out by *B* passes along the line, through both coils of *A*'s relay in series, and through the rheostat to earth. The received current is therefore only half as great, because it has encountered twice the resistance. Since, however, it has passed through both coils of *A*'s relay the strength of the mark is unaffected. At *B* the line and compensation currents do not balance, as they are of unequal strength. The compensation current therefore tends to mark until *A*'s key touches the front stop.

Use of Non-polarized Relays and Direct Working. In the exposition of this method standard relays have been depicted, but a little consideration will show that non-polarized relays, or either a differentially wound polarized or ordinary non-polarized sounder or inker for direct working, could have been employed.

P.O. or Combination Method of Duplex Working. In the opposition method of duplex working the compensation circuit tended to mark and the line circuit to space. When the line path was stopped by the two batteries opposing each other the compensation circuits marked. The combination method differs from this in the fact that when both keys are depressed the two batteries combine together in the line circuit. There is, therefore, twice as large a current in the line circuit as in the compensation circuit. The line coil of the relay tends to mark, and the signal is produced by the preponderance of the line current's effect over that of the compensation circuit at either end.

The internal apparatus connections are identical at

the two ends of the circuit, and the combination of the batteries is effected by reversing line and earth. In fact, just as in the case of every form of apparatus described, there is an up and a down line terminal whose connections to line and earth are determined by whether the office is an " up " or " down " station.

The single current key is connected between the strapped terminals of the relay and the lower terminals of the galvanometer (Fig. 150). The small resistance coil r is equal to the internal resistance of

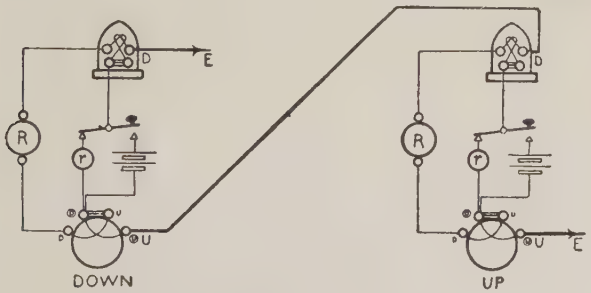

FIG. 150. SKELETON CONNECTIONS OF SINGLE CURRENT DUPLEX

the battery, and the resistance of the circuit is, therefore, the same in either position of the key. The method of joining up the key between the galvanometer and relay is often termed the " double split," a most unfortunate designation and one which frequently produces confusion in the minds of students. If a current divides between two paths it is evident that the two parts must re-unite at some point. In this case the current splits at the lower terminals of the galvanometer and re-unites at the strapped terminals of the relay. The original object of the arrangement was to simplify the type of single and duplex switch. The rheostat contains resistance equal to that of the line and distant receiving apparatus, the latter comprising

the right coil of the galvanometer, resistance block r,* and the circle coil of the relay.

Path of Current. After the detailed description of the conditions of duplex working given in the case of the opposition method it will, in the present instance, be unnecessary to do more than indicate the path of the current in each position of the keys.

When the down station depresses his key the current flows from the positive pole of the battery to the galvanometer, where it divides equally, the line half going to earth, in at the up station's earth, through his relay U-circle to D-circle (producing a mark), through r, back stop of the key, through the right or line coil of the galvanometer, along the line, through the U-circle D-circle coil of the down relay (*tending* to mark) back to the negative pole of the battery. The other half of the down station's current passes through the left or compensation coil of the galvanometer, through the rheostat and DU coil of the relay (*tending* to space) back to the negative pole of the battery. At the down station no effect is produced upon the apparatus because the line and compensation currents are equal in value but opposed in effect. The mark and galvanometer deflection at the up station are due to the current received from the down station. At the down station the current splits at the galvanometer and the two parts re-unite at the strapped terminals of the relay. It should also be noted that although the current passes directly to earth at the down station, it has to traverse the resistance of the line and distant receiving apparatus before it can return to the down battery.

Upon depression of the up station's key, his current splits equally between the line and compensation circuits, and therefore produces no effect upon his own

* To be strictly accurate, account must be taken of the fact that r is shunted by the compensation circuit, and that the combined resistance of both is slightly less than r. For all practical purposes this may, however, be ignored.

apparatus. The line half of the current passes along the line to the down station, through the U-circle D-circle coil of the relay (producing a mark), r, and line coil of the galvanometer to earth and thence back to the battery. As before, the mark is made by the current received, as in simplex working.

When both keys are depressed the batteries combine together in the line circuit, thus producing a current of twice the strength of that in each compensation circuit. The path of the line current is from the positive pole of the down station's battery through the line coil of the galvanometer, to earth, through the up station's U-circle D-circle coil of the relay, through the up station's battery (acting in the same direction), through the line coil of the galvanometer, along the line, through the down station's U-circle D-circle coil of the relay back to the negative pole of the battery. The direction of this current is from U to D in both relays, and a mark is produced upon both. The path of the current in each compensation circuit is the same as before, but the current is in each case due to its own battery only, and is, therefore, of the same strength. The line current, being due to the two batteries acting in series, is of twice the value, and the resultant effect is therefore equivalent to the current received when only one key is depressed.

Numerical Values of Current in Each Part of the Circuit. The case will perhaps best be illustrated by a numerical example. In order to simplify the calculation the internal resistance of the battery and r will be taken as negligible. Let the resistance of each coil of the galvanometer be taken as 43ω, that of the line as 264ω, and each coil of the relay as 200ω—

Resistance in each rheostat $= 264 + 43 + 200 = 507\omega$.

Total resistance of line circuit $= 200 + 264 + 43 + 200 + 43 = 750\omega$.

Total resistance of each compensation circuit $= 750\omega$.

Let the E.M.F. of each battery $= 7{\cdot}5$.

Current in line circuit (both keys depressed) . . . . $= \dfrac{7{\cdot}5 + 7{\cdot}5}{750} = 20$ mA

Current in each compensation circuit	$= \frac{7{\cdot}5}{750}$	$= 10$ mA
Current in line circuit (one key depressed)	$= \frac{7{\cdot}5}{750}$	$= 10$ mA
Current in compensation circuit at sending end (one key depressed)	$= \frac{7{\cdot}5}{750}$	$= 10$ mA

The received current when one key only is depressed is 10 mA, and this passes through one coil of the receiving relay. When both keys are down the line coils of the relays carry 20 mA and each compensation circuit 10 mA. The net effect upon the tongue of the receiving relay is precisely the same as that produced when the distant or sending station's key only is depressed.

Intermediate Position of Keys. The last condition which remains to be considered is the path of the current when one key is depressed and the other momentarily occupies a midway position. In this case the path of the current at the receiving end is through both coils of the galvanometer, through the rheostat, and both coils of the relay. Taking the above figures, the value of the current is 5 mA, but as this passes through both coils of the relay its effect is the same as 10 mA upon one coil. At the sending end the current in the compensation circuit is as before 10 mA upon one coil tending to space, opposed by 5 mA upon one coil tending to mark. It will be therefore noted that, whilst the combination method tends to end the mark instantly contact is broken with the front stop of the key, the opposition method tends to prolong it until contact is made with the back stop.

Single Current Sounder Duplex. The connections shown in Fig. 150 are the actual skeleton connections for single current sounder duplex working. By the addition of a six-terminal two-position switch (*vide* page 300) simplex or duplex working can be arranged at will. Further description is unnecessary since such sets are no longer in use. A double current direct duplex would be employed. The full connections are, however, shown in Fig. 151. The current required is 15 to 20 mA.

Double Current Sounder Duplex. The advantages which have been c'aimed for the double current system

in simplex working (page 264), apply with even greater force to duplex working.

Conditions for Double Current Duplex Working. In the double current duplex a spacing current takes the place and performs the functions of the magnetic

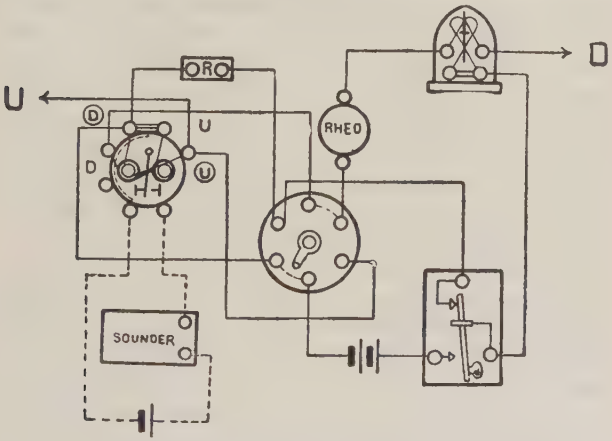

FIG. 151. CONNECTIONS OF SINGLE CURRENT DUPLEX

bias employed in single current working. Consideration will show that the following conditions must obtain—

1. When both keys are at rest (switches to " send ") the tongues of both relays must be held over to the spacing side.

2. When both keys are depressed (switches to " send ") the tongues of both relays must be held over to the marking side.

3. When one key is at rest and the other depressed (switches to " send ") the relay at the end where the key is depressed must space, and the other relay must mark.

Skeleton Connections. When both keys are depressed the skeleton connections and values of the

currents in each portion of the apparatus are identical with those of the single current system when the keys at both ends are down.

The general connections for double current duplex working differ from those of the single current duplex merely in the substitution (between the strapped terminals of the relay and galvanometer) of a double current for a single current key. The rheostat is joined between the left side of the galvanometer and *D* of the relay, and contains resistance equal to that of the line and distant receiving apparatus. *U*-circle of the relay and the right-hand terminal of the galvanometer are respectively the up and down line terminals, and these are connected to line and earth in accordance with the principles already stated.

When both keys are at rest or both are depressed, the two stations' batteries combine together to produce an effect upon both stations' relays. The compensation circuits in both these cases carry a current of half the value of that in the line circuit, because the current in the latter case is produced by the two batteries in series, whilst in the former the current is due to each battery acting separately. The effect upon the relay is due to the preponderance of the current in the line over those in the compensation circuits. As this principle has already received ample consideration no further explanation should be necessary. It should also be apparent that, when both keys are at rest, the compensation circuit tends to mark and the line circuit to space.

When one key is depressed the battery at that end is reversed and, consequently, the direction of the current in its compensation circuit is changed. Instead of tending to mark it now tends to space, and, since the reversal of the battery causes the two stations' batteries to oppose each other, it is left free to produce this effect. At the distant end the compensation circuit marks.

Both keys at rest or both depressed. The skeleton connections of a double current duplex circuit (both keys at rest) are depicted in Fig. 152. The path of the line current has been shown by dotted lines and arrows, whilst the compensation circuits are shown by full lines. The line current is twice as great as the compensation current, and, when both keys are at rest (as shown), passes through the circle coils of both relays in the

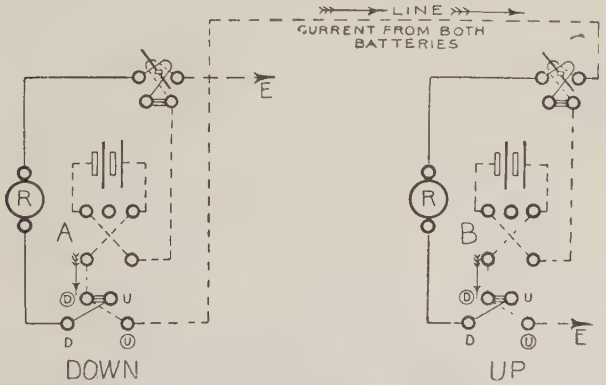

FIG. 152. SKELETON CONNECTIONS OF DOUBLE CURRENT DUPLEX

The path of the current due to both batteries is shown by dotted lines and the compensation current by the full lines

direction *D* to *U*. If the current in each compensation circuit is 10 mA that in the line circuit is 20 mA, whilst that in the battery from the galvanometer split to the relay split is 30 mA in each case. If both keys are depressed the direction of the current is everywhere reversed and both relays will therefore mark. The strengths of the currents in the various parts of the circuit are, of course, the same as in the previous case.

One key only depressed. The conditions which result when the down station depresses the key whilst the up station is at rest are shown in Fig. 153. In this case

the two batteries have similar poles to line, and being of equal E.M.F., there is no current in the line circuit, therefore the compensation circuits are left unopposed. The paths and directions of the currents have, in each case, been indicated by dotted lines and arrows. The

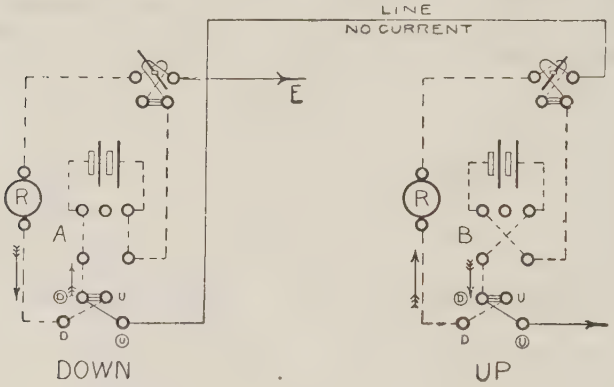

Fig. 153. Skeleton Connections of Double Current Duplex

The path of the current in the compensation circuit is shown by dotted lines. The full lines indicate paths in which there is no current flowing.

full lines in this figure represent parts of the circuit in which no current is flowing.

EFFECT OF CAPACITY OF LINE

In order to render duplex working practicable, it is essential that the compensation circuit shall resemble the line circuit as closely as possible. A long or underground telegraph line possesses considerable capacity as well as resistance, and, therefore, a rheostat alone is insufficient for balancing. With short lines no provision need be made to balance the capacity, and a rheostat is, therefore, all that is required in the compensation circuit.

It has been stated that a line has to be charged before

any effect is produced upon the distant apparatus. Upon connecting an earthed battery to such a circuit there occurs a rush of current into the circuit to satisfy its capacity. If such a circuit were balanced only by a rheostat, this rush of current into the circuit would momentarily upset the balance and so produce a " kick " upon the relay. During the time that the wire is being charged it behaves as though it offered little or no resistance to the charging battery. The resulting heavy rush of current into the line would preponderate over the steady current which would, almost instantly, commence through the compensation circuit—upon releasing the key the wire would discharge and a momentary upsetting of the balance would again result. If these irregularities of the sending current occurred in the middle of received marks, these marks would be split and would thus preclude the possibility of duplex working upon long lines. It is therefore necessary to give to the compensation circuit an amount of capacity which will cause charges and discharges in that circuit equal in every respect to those of the line. This may frequently be accomplished by simply joining a condenser of the requisite capacity across the terminals of the rheostat. Later, it will be shown that this simple arrangement has to be considerably modified in the case of very long circuits. It will, however, amply suffice for the explanation of the paths and directions of the line and compensation circuit charge, discharge, and recharge, under working conditions. Before proceeding further it will be necessary to show how the value and distribution of the charge upon a telegraph line may be represented.

Graphic Representation of the Charge upon a Line. The quantity of electricity or the charge upon a disconnected telegraph circuit is equal to the product of its capacity and the E.M.F. applied to it. If, therefore, the capacity is numerically represented by the length of a horizontal line and the E.M.F. by the height of a vertical line, the quantity of the charge will be represented by the area of the rectangle contained by those

lines. Moreover, the direction of the charge, positive or negative, may be shown by drawing the rectangle respectively above or below the horizontal line. If an E.M.F. of one volt is represented by a vertical line one inch long and a farad by a horizontal line one inch long, the area enclosed is one square inch, and this would represent one coulomb. Any values of E.M.F. and capacity could readily be plotted, and the enclosed area in square inches would represent the value of the charge in coulombs. In the present case, however, it is only desired to show the relative magnitudes and distribution of charges, and therefore 50 volts and 1 m.f. will respectively be represented by $\frac{3}{4}$ in. and $\frac{7}{20}$ in. The value of the charge in coulombs will then be equal to ·00019 of the area enclosed (in square inches). The farad and coulomb are, of course, far too large

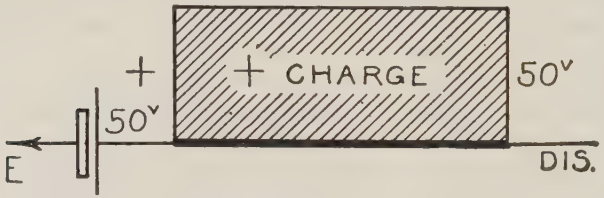

Fig. 154. Positive Charge upon a Disconnected Line

units for practical purposes, and in this instance each square inch of area will represent 190 micro-coulombs.

The charge due to an E.M.F. of 50ᵛ applied to a circuit of 5 m.f. capacity is shown in Fig. 154. The area of the shaded portion represents the value of the charge, and, as it is shown above the line, the sign is positive. Since the wire is disconnected the same difference of potential exists between line and earth at both ends of the circuit. The charge is due to a current flowing from the positive pole of the battery, to the side of the dielectric in contact with the line, and from the dielectric in contact with the earth back to the negative pole of the battery. If the battery be now disconnected and the wire earthed, the charge will flow out of the wire to earth and so relieve the strain upon the dielectric (*vide* page 176).

An E.M.F. of 50ᵛ is shown applied in the reverse direction to an earthed circuit of 5 m.f. capacity in Fig. 155. In this case the potential of the positive pole of the battery is zero, i.e. the same as that of the earth, whilst that of the negative pole is 50 volts below zero. At the battery end the difference of potential between the wire and earth is 50 volts, but at the other end it is nothing, since that end is earth connected.

The charge is therefore represented in value by the area, and in sign by the *downward position* of the triangle. It will be seen that, with the same E.M.F. applied in both cases, the value of the charge upon an earthed circuit is half that upon the circuit when disconnected. It will also be noted that the charge is not evenly distributed over the wire, but is densest at the battery end and at the distant end is nothing. The density therefore varies from nothing at the earthed end to a maximum at the battery end, due to the fact that the difference of potential similarly varies from nothing to – 50 volts.

The effect of connecting two earthed batteries in series at either end of a circuit is shown in Fig. 156. The differences of potential between each end and earth is + 50 volts and – 50 volts respectively. It will therefore be seen that at the

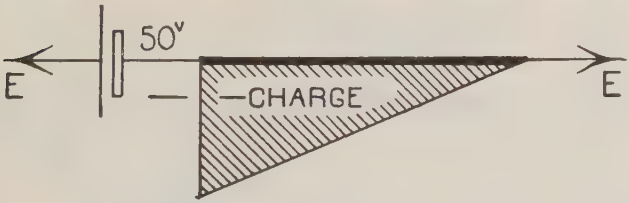

Fig. 155. Negative Charge upon an Earthed Circuit

centre of the circuit the potential is zero, and no effect would be produced upon the magnitudes and values of the charges if that point were earthed. It will also be noticed that the disconnection of the right-hand battery would reproduce the conditions of Fig. 154, and that a current would flow into the wire sufficient to sweep out the negative charge and to charge the whole of the wire positively.

The results of the foregoing somewhat lengthy explanations may be summarized as follows, and it is in this form that they will be applied to the practical cases which present themselves.

1. The value and sign of a charge may be represented by the area and position of a rectangle or triangle as the case may be.

2. If either pole of a battery is earthed its potential is considered zero, and that of the other pole as the E.M.F. of the battery above or below zero as the case may be.

3. The potential of the earthed end of a circuit is considered as zero.

Paths of Line and Compensation Circuit Charges and Discharges. When both keys of a double current duplex

set are at rest opposite poles of the battery are connected to the line at the two ends and the distribution and signs of the charges are, therefore, similar to those depicted in Fig. 156. At the down station the positive pole of the battery is normally connected to line, but in Fig. 157 the key is shown depressed, i.e. with negative to line. The two shaded triangles represent the charges which exist when both keys are at rest. With the down station key depressed, the negative pole of the battery would be connected to line as shown in the

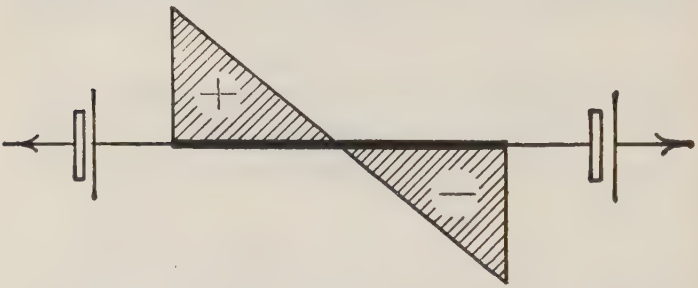

Fig. 156. Positive and Negative Charges Due to Connecting Earthed Batteries of Equal E.M.F., but with their Opposite Poles Connected to the Two Ends of the Circuit

figure. It is, however, desired to trace exactly what happens at the moment of depressing the key, and, therefore, the charges which existed when both keys were at rest have been depicted as stated. The up end of the line is negatively charged and the reversal of the battery at the down end will clearly produce a negative charge at that end also. Since the two batteries are of equal E.M.F., the potential below the earth will be the same, and the result will be that the wire will have the negative charge depicted by the rectangle enclosed by the wire, dotted lines, and the full line at the up end. In order to effect this, the existing positive charge at the down end must be swept out and a negative charge must be given of sufficient value to complete

the negative charging of the wire. It should be noticed that the negative charge at the up end of the circuit remains the same, and it is merely a matter of " filling up " the rest of the wire with negative.

Having dealt with the charge when both keys are at rest and when the down key only is depressed it is necessary to trace the direction of the charges and discharges which must occur in order that the former condition may merge into the latter. In order to charge the wire negatively a current must flow from

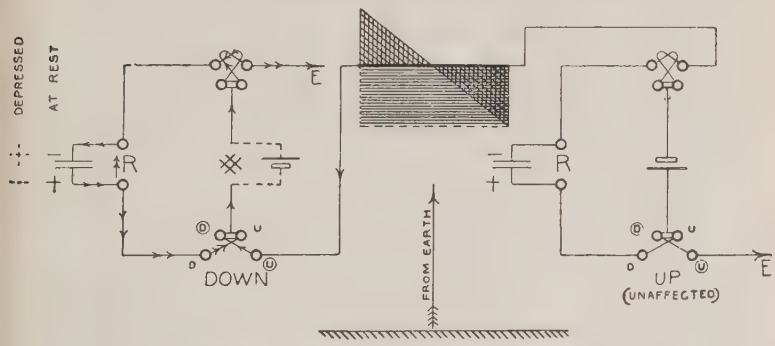

FIG. 157. DOUBLE CURRENT DUPLEX

Paths of line and condenser charge and discharge. The conditions are depicted at the moment when the down key is depressed.

the positive to earth to the dielectric in contact with the earth, and an equal quantity must flow from the other side of the dielectric to the wire and back to the negative pole of the battery. If the wire possesses a positive charge the direction of its discharge is the same, viz. from the wire to earth through and in the same direction as the battery. In the present case, therefore, the depression of the down key (as shown in Fig. 157) causes the positive charge to discharge through the battery. The negative recharge of course, takes place in the same direction. A positive discharge and a negative recharge current, therefore, flow from the wire through the *U*-circle *D*-circle coil of the relay

(direction U to D), through the battery, right coil of the galvanometer, to earth. This may be put in another and more correct way. Upon reversing the battery a current flows from the positive pole through the galvanometer to earth, to the dielectric (air, paper, or gutta-percha as the case may be), in contact with the earth, then from the other side of the dielectric in contact with the wire, on to the wire, out of the wire at the down end, through the circle coil of the relay, back to the negative pole of the battery. The current flows until the whole of the wire is negatively charged, and, therefore, the quantity of electricity flowing out of the end of the wire to earth through the apparatus is equal to the product of the E.M.F. of the battery and the capacity of the circuit when disconnected at the distant end. This will be quite apparent from the fact that the charges existing when both keys were at rest are equal in magnitude, but opposite in sign.

The terminals of the rheostat are bridged by a condenser of such a capacity that its discharge and recharge in the reverse direction through the compensation coils of the relay and galvanometer are equal to the discharge and recharge of the line through the other coils. When both keys are at rest the condenser at the down station is charged by the difference of potential across the terminals of the rheostat, due, of course, to the current flowing in the compensation circuit. The lower plate is, therefore, charged positively and the upper negatively. When the down key is depressed (as depicted) the condenser discharges and is charged in the reverse direction, the result being indicated by the dotted signs. There are two paths open to the discharge current, viz. through the rheostat and through the DU coil of the relay, battery and left coil of the galvanometer. By far the greater portion takes the latter path and is followed by the recharge in the reverse direction. In fact, no serious error is made in assuming that the whole of the discharge and recharge

occurs through the relay and galvanometer, and that practically no current flows through the rheostat until the condenser is fully charged with the quantity of electricity it will require to have due to the potential difference between the terminals of the rheostat. The charges in the condenser at the up end are unaffected because that battery has not been disturbed, and, therefore, the potential difference across its rheostat is unaltered in magnitude or direction. Both the condenser and the line discharges and recharges are caused by the reversal of the battery, and the circuit from the strapped galvanometer to the strapped relay terminals is common to both. The directions and paths of the line and condenser charges have respectively been indicated by single and double arrow-heads. The effect of the line charge is to produce a marking "kick" on depressing the key and that of the compensation circuit a spacing "kick," and, by choosing a suitable value of capacity in the condenser, the two effects counterbalance each other and duplex working is possible.

As the above conditions have received such minute consideration, it will suffice briefly to state the effects due to depressing or raising the other key, and then to summarize the whole of the results of the investigation.

If the down key is released, the conditions of charge represented by the triangles will be re-established and the condenser will be discharged and recharged as indicated by the full and not the dotted signs. This will entail rushes of current in the down station's line and compensation circuits in directions opposite to those shown by the arrowheads. The up station will be unaffected.

The depression of the up key whilst the down key is at rest will cause the whole of the line to be positively charged and will reverse the charge in the up condenser. The path of the line negative discharge and positive recharge is from the positive pole of the battery through

the line coil of the galvanometer to line into the adjacent dielectric, thence from the opposite side of the dielectric to earth, through the relay from *U*-circle to *D*-circle and back to the negative pole of the battery. The condenser discharges and recharges through the other coils of the galvanometer and relay, but in the spacing direction. The down station is unaffected. When the up key is released the conditions previously existing are restored by discharges and recharges in the opposite direction to those just described.*

Summary of Effects of Line and Compensation Circuit Charges and Discharges. The results of the foregoing investigations may be summarized as follows—

1. At the end of the circuit, where the position of the key is unaltered, no effect takes place, and it is, therefore, only necessary to consider the end where the key is changed in position.

2. The sign of the charge upon the end of the line is the same as that of the pole of the battery connected to it.

3. The discharge and recharge of the line is in the same direction as the discharge and recharge of the condenser, and both are always in the same direction as the E.M.F. of the battery when the latter is changed by altering the position of the key.

4. The line discharge and recharge passes through the line coils of the relay and galvanometer and through the battery.

5. The compensation circuit charges and discharges through the left coil of the galvanometer, battery, and *UD* coil of the relay.

6. On depressing a key the direction of the line discharge and recharge is from *U*-circle to *D*-circle, so tending to cause a marking kick. The galvanometer needle similarly moves upwards or towards the right.

* The reader is strongly advised to sketch each of the conditions dealt with, and to plot the resulting charges together with the paths of the current producing them.

Arrangement of Compensation Circuit for Balancing Long Lines. Very long lines cannot be satisfactorily balanced by simply placing a condenser across the terminals of the rheostat. It will now be necessary to investigate this statement and consider the arrangements adopted in such cases.

The quantity of electricity in a given condenser depends upon the E.M.F. with which it was charged and upon its capacity. The discharge of the condenser will give rise to a current of electricity, but the duration and magnitude of the current will depend upon the properties of the circuit through which it discharges. For instance, the condenser will take twice as long to discharge itself through a resistance coil of 100^{ω} as it would through a 50^{ω} coil. In the former case the average value of the discharge current would be only half as much as in the latter case.

In order that the discharge of the condenser in the compensation circuit may balance that in the line circuit, it is obvious that the discharges must not only be equal as regards the quantity of electricity discharged, but the discharges must occupy exactly the same time. In fact, at any and every instant during which the two discharges take place they must be exactly equal in value. Now the charge and discharge of a long line cannot be balanced by a compensation circuit arranged as in Fig. 157. The quantity of electricity discharged through the line coils of the galvano meter and relay may be exactly equal to that discharged through the compensation coils, but unless the rate of discharge is the same, irregularities will inevitably occur. The line charge and discharge are slow in comparison with the charge and discharge of a condenser arranged as described. The reason is that in charging a line, say a hundred miles long, the current has to traverse and charge the first ten miles before it can charge the second, the second ten miles of line has to be traversed and charged by the current before the

third ten miles is charged, and so on. The resistance encountered in the path of the charging current slows down the rate at which the circuit is charged. In the case of the condenser the battery is applied almost directly to its terminals, and the charge is, therefore, much more rapid. In the one case, the capacity is distributed over a very long line, every mile of which has a very appreciable resistance, whilst in the other the capacity is all located at one point and that point almost directly between the terminals of the charging battery. The one coil of the relay, and the one coil of the galvanometer alone intervene between the terminals of the battery and the condenser.

Effects of Defective Capacity Balance. It will now be possible to trace the effect of attempting to balance a long line by a condenser bridged across the rheostat. In Fig. 157 the paths and directions of the line and condenser discharge and recharge upon depression of the down key are indicated by arrowheads. If the line is very long, its discharge and recharge will occupy a longer time than that of the condenser. The rapid charging of the condenser will give rise to a short heavy current, whilst the slow charging of the line will entail a smaller current spread over a longer time. Therefore, the charge current through the compensation circuit will, during its existence, preponderate over the line charge current, so causing a kick to spacing. Immediately the short heavy charge of the condenser ceases the line charge, which is still proceeding, in its turn affects the relay, but in the opposite direction. The result of the arrangement is that the two charge currents alternately upset the balance, but the unopposed latter part of the line charging current is of very small importance in comparison with the preponderance of the short heavy rush of current through the condenser.

The introduction of resistance into the charging and discharging circuit of a condenser slows down its rate

of charge and discharge. If, for instance, an E.M.F. of 100 volts is applied to a condenser in series with a resistance of 10,000ω, it will be obvious that the maximum possible value of the charging current at the instant at which the charge commences cannot possibly exceed 10 mA $\left(\frac{E}{R}\right)$. If the resistance is 1000ω, upon the same argument the maximum current could not exceed 100 mA.

The insertion of resistance between the condenser and the rheostat has, then, the effect of slowing down the charge and discharge of the condenser. It will not, however, in any way affect the *quantity* of electricity in the condenser.

Retardation and Condenser Coils. Upon very long circuits even this device fails, and recourse is taken to the use of two condensers and two resistances as depicted in Fig. 158. The first condenser A is charged and discharged through the resistance R_2 and the second condenser B through both R_2 and R_3. The charge and discharge of the second condenser therefore occur a little later than those of the first, and the result is a much closer imitation of the line charge and discharge than is possible with a single condenser. The two condensers are contained in a single box as described in Chapter VI. A reference to this and to Figs. 158 and 159 will make the arrangement adopted quite clear.

The resistance R_2 is termed the retardation coils and is furnished with eight coils having a total resistance of 1100ω, the smallest coil being 10ω. The resistance R_3 is only employed upon aerial circuits over 200 miles in length, and for circuits under 200 miles long consists of a fixed resistance coil of 2000ω. Over that length a 7-plug resistance box, having a range of 50ω to 4050ω by gradations of 50ω is employed, and is termed the "condenser coils." Since the resistance required in the condenser coils varies to a very small extent with the

weather, the fixed resistance coil 2000ω is quite satisfactory upon any but the longest circuits.

For cable circuits it is necessary to employ a three-section or triple condenser of considerable capacity and three sets of resistance coils, but the principle of the arrangement is identical with that of the two-section condenser.

Capacity Balance may Differ at the Two Stations. In Fig. 157 the capacity and resistance of the line were assumed to

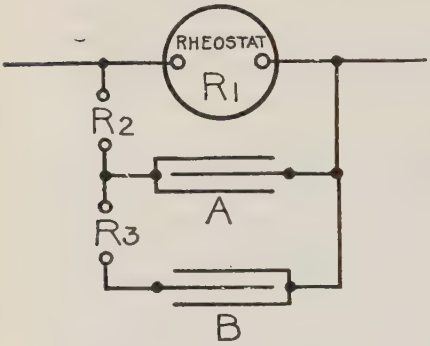

FIG. 158. ARRANGEMENT OF CONDENSERS AND TIMING RESISTANCES IN THE COMPENSATION CIRCUIT

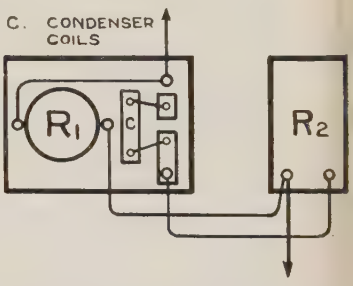

FIG. 159. ARRANGEMENT FOR BALANCING APPARATUS IN COMPENSATION CIRCUIT

R_1 is the rheostat, R_2 the retardation coils (Fig. 26) and C the condenser coils (Fig. 27).

be uniformly distributed along the length of the line. In practice this is rarely the case, especially upon long circuits. The effect of an unequal distribution is to alter the position of the zero point. To take a greatly exaggerated case, suppose that a line has a resistance of 2000ω, and that one-half of the circuit has a capacity of 15 m.f., whilst the capacity of the second half is nothing. Such a case could be artificially produced by adding a resistance coil to a long underground circuit, the value of the coil being equal to the conductor resistance of the line. The zero point of the circuit would be at the junction of the line and the coil. Since there is no charge upon the artificial resistance, it will be found that the effect of reversing the key at the resistance coil end of the circuit is

to cause a charge proportional to the area of the triangle representing the charge to occur. At the cable end, reversal of the key results in a discharge exactly three times as great. This deduction from the principles already considered is so obvious that further explanation should not be needed.

The application of this principle in practice shows that where a circuit consists of a submarine or long underground

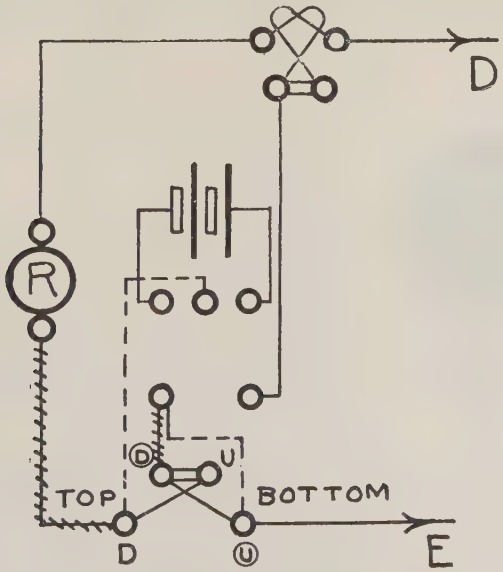

FIG. 160. ALTERATIONS TO DOUBLE CURRENT DUPLEX CONNECTIONS REQUIRED FOR SIMPLEX WORKING

The hatched connections are required for duplex, and the dotted connections for simplex working

line at one end, with an open line of considerable length joining it, the capacity at the open end of the circuit may be very much less than that at the cable end. For instance, upon a London-Birmingham duplex passing through the underground route, $7\frac{1}{4}$ m.f. condensers are required at either end. If the circuit is extended northwards from Birmingham by a long open line, a $10\frac{1}{2}$ m.f. condenser is needed at the London end.

At the cable end of a circuit the value of the retardation resistance is usually low, and the capacity in the first division of the condenser is correspondingly high.

Duplex Switch. In order that the set may be worked simplex or duplex at will a six-terminal two-position switch is added to the set. Simplex working is often desirable from traffic considerations, and there are occasions when a defective line can be worked simplex but not duplex. If the insulation is variable, the duplex balance cannot be maintained, and interference between the outgoing and incoming signals will result. Then,

FIG. 161. DUPLEX SWITCH ARRANGEMENT OF SPRINGS AND CONTACT PIECES

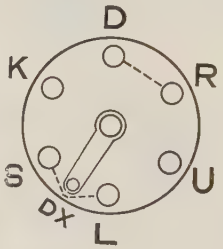

FIG. 162. DUPLEX SWITCH CONNECTIONS WHEN THE LEVER IS TURNED TO "DUPLEX"

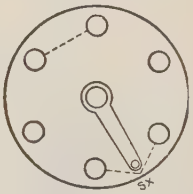

FIG. 163. DUPLEX SWITCH CONNECTIONS WHEN THE LEVER IS TURNED TO "SIMPLEX"

again, very low but steady insulation resistance may result in the received current being inadequate to produce firm and reliable marks. In such a case, simplex working may be practicable because in this case the received current traverses both coils of the relay in series, whereas in duplex working its effect is on one coil (the line coil) only.

The duplex switch (officially termed a six-terminal two-position switch) is essentially two two-way switches controlled by one lever. The six terminals are equally spaced round the wooden base of the instrument beneath which they are respectively joined to six brass segments. The two U-shaped springs (Fig. 161) are insulated from each other and in the position shown (Fig. 162) the bottom terminal and its left-hand neighbour are connected, whilst the top terminal and that

to the right are also connected. When the handle is moved to the right, or simplex position, the central portion moves with it, so connecting the springs then lying upon the two brass segments. The terminals between which the handle lies are connected, as well as those opposite (*vide* Figs. 162 and 163).

Connections of Duplex Set. A duplex and simplex switch is added to the apparatus in much the same

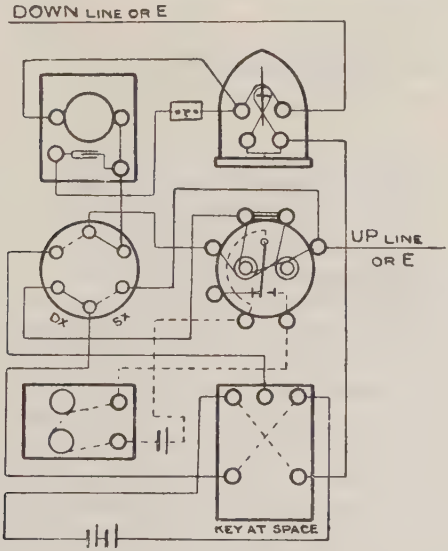

FIG. 164. DOUBLE CURRENT SOUNDER DUPLEX CONNECTIONS

way as in the single current duplex. The alterations required to change the set from duplex to simplex are shown in Fig. 160. The dotted lines represent the connections which must be established and the hatched lines those which must be broken. If Figs. 160 and 164 are carefully compared, and the mnemonic " Drulsk " memorized, little trouble will then be experienced in remembering the connections. The full connections are depicted in Fig. 164.

The following facts may profitably be noted—

1. As in all types of sounder circuit, the up station sends positive to line to mark.

2. The right terminal of the galvanometer and the *U*-circle terminal of the relay are respectively the down and up line terminals.

3. The top three terminals of the duplex switch deal with *D* of the relay, and the lower three with the left terminal of the key.

4. The key is inserted between the strapped terminals of the galvanometer and relay.

5. With the keys at rest the line, or circle, coils tend to space.

Double Current Duplex Direct Sounder. The connections are similar to those of Fig. 165, but the polarized sounder ($100^{\omega} + 100^{\omega}$) takes the place of the relay. The compensation circuit is shown with a "D" rheostat and both retardation and condenser coils.

Resistance Balance. The conductor resistance of an aerial telegraph circuit varies with the temperature. The difference between its resistance at summer and winter temperature (100° F. and 22° F.) would amount to $26\frac{1}{2}$ per cent if the wire were of iron and to nearly 18 per cent if of copper wire. The insulation resistance of the circuit is also subject to wide variations. In very fine dry weather the insulation rises to a very high value, and in damp or wet weather falls to a corresponding extent. Upon long circuits this difference is most distinctly felt, but upon very short circuits it is not noticeable, because of the disparity in the values of the conductor resistance and the lowest value of the insulation resistance without the existence of a definite fault or faults. This point will be reverted to in Chapter XXII.

Since the resistance of a circuit is variable, it will be seen that an adjustable resistance and not a resistance coil of fixed value must be employed to balance it. The instrument employed, termed a rheostat, has been

described in Chapter IV. The value of the resistance which it is necessary to insert to obtain a balance is ascertained by means of the duplex set itself.

The top of the needle of all Post Office galvanometers deflects in the direction in which the effective current passes from terminal to terminal of the instrument, and reference to Figs. 152 and 153 will, by aid of this rule, show that a spacing current is represented by a deflection to the left, and a marking

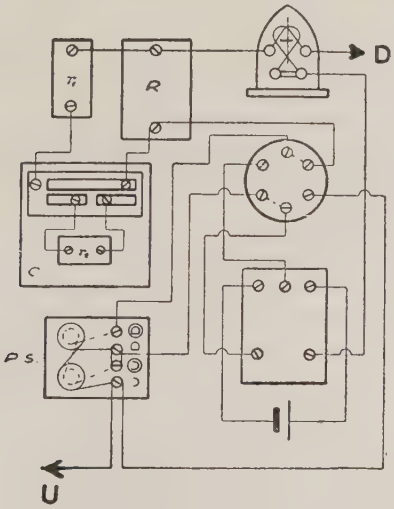

Fig. 165. Double Current Duplex with Polarized Sounders

current by a right deflection. In Fig. 152 both needles deflect to the left, and the relay spaces by the preponderance of current in the line coils of the galvanometer and relay. This fact may be expressed in an equally correct but more convenient way, viz., that they are actuated by the current received from the distant station. If a resistance coil equal in value to the internal resistance of the battery is substituted for the distant battery, the deflection upon the home galvanometer at once falls to zero if the circuit has been accurately balanced. The home current divides equally between the line and compensation circuits, and no effect is therefore produced.

If these circuits were not balanced then the one of lower resistance would carry the larger current, so producing a deflection, the direction of which would be reversed upon depression of the key. The effect of replacing the resistance coil by the distant battery may be regarded as the sending of a current through the home line coils of galvanometer and relay. This spacing current deflects the galvanometer and causes the relay to space, but if the home key is now depressed the deflection upon the home galvanometer is increased or decreased according to which circuit (line or compensation) has the higher resistance.

If no resistance is inserted in the rheostat the compensation current is sufficiently great to overcome the effect of the current in the line coils of the relay and galvanometer, and a marking current and deflection will result. The sounder will be held down, and the marks sent upon the home key will be received reversed upon the home sounder. Upon the other hand, a disconnection or the insertion of a very large resistance in the rheostat will cause the marks from the home key to be received straight.

The practical operation of balancing is carried out by the aid of the effects which have been explained above. The 40^{ω} arm of the rheostat is placed at zero, and the 400^{ω} arm at any value in excess of the resistance of the circuit. The key is depressed, and the effect observed upon the galvanometer or the sounder if the balance is out to a sufficient extent to affect it. The 400^{ω} arm is moved downwards, point by point, until the depression of the key gives a deflection in the reverse direction to that previously obtained. The 40^{ω} arm is then moved up point by point until a balance is obtained. An increased downward deflection (or, if the needle lies on the marking side, a reduced or reversed deflection) upon depression of the key indicates that the resistance in the rheostat should be increased, and the converse that it should be reduced. The use of this rule in a logical manner enables a circuit to be accurately balanced in the minimum of time.

Difficulty in Working Very Short Circuits. It is not possible to work a duplex circuit through a line of very low resistance without special arrangements. For instance, it is impossible for satisfactory working to be obtained between two sets in the same office or over a circuit which is only one or two miles in length. The reason is that, in the ordinary arrangement, no account is taken of the inductance of the distant receiving

apparatus. In the compensation circuit there is one coil of the relay, one of the galvanometer and a resistance equal to that of the line, and one coil of the relay and one of the galvanometer at the distant end. In the line circuit there are, therefore, one coil of the home galvanometer, one of the home relay, the line itself, and one coil each of the distant relay and galvanometer. Whilst the compensation is equal in resistance to that of the line circuit, the inductance of the line circuit exceeds that of the compensation circuit by an amount equal to the inductance of one coil each of the galvanometer and relay. In the majority of cases this lack of balance has no practical effect, but upon very short circuits it renders duplex working quite impossible owing to the false signals produced by working the key. In fact, the effect is similar but opposite in direction to the " kicks " due to unequal capacity in the line and compensation circuits dealt with in a preceding section of the present chapter.

One solution of the difficulty is artificially to increase the resistance of the circuit to such a value that the E.M.F. of self-induction produces only a negligible current. This may entail the use of extra battery power, and the better plan is, therefore, to include in the compensation circuit a coil having an inductance equal to that of one coil of the relay and the coil of the galvanometer.

These remarks apply equally to single current duplex and to quadruplex working.

Capacity Balance. The balancing of the capacity of the circuit can only be effected when the resistance has been dealt with, and it will now be necessary to point out that the resistance balance is obtained by noting the position of the galvanometer needle when the kicks due to inaccurate capacity balance have passed away. It is merely necessary to hold the key down sufficiently long for the needle to come to rest after the kick has passed away. The steady positions of the needle should alone be observed in this case.

The effects of capacity have been very fully considered, and

the following rules can readily be deduced from the previous explanation—

1. If, on depressing the key, the galvanometer needle momentarily deflects upwards (i.e. marking direction), the capacity in the compensating circuit should be increased.

2. If, on depressing the key, the galvanometer needle momentarily deflects downwards (i.e. spacing direction) the capacity in the compensation circuit should be decreased.

3. If on depressing the key, the galvanometer deflects first upwards and then downwards, and, on release, downwards and then upwards, or in both cases vice versa, the timing resistances require alteration.

In cases (1) and (2) the kick is observed in the reverse direction when the key is released. The final adjustments are frequently made by the passage of working signals, and resolve themselves into an intelligent form of "trial and failure" method. The time taken in finding the exact balance of a cable circuit upon which a triple condenser is employed is very considerable, but when once found the variations necessitated from it are confined within small limits.

The second and third timing resistances very rarely require alteration, but the first retard (retardation coils) is extremely important.

For underground loops, the following values* give a close approximation to the final balance, the latter being obtained by applying the rules stated above—

$$K_1 = \cdot00852L \qquad r_1 = \cdot07R$$
$$K_2 = \cdot00723L \qquad r_2 = \cdot21R$$
$$K_3 = \cdot00593L \qquad r_3 = \cdot35R$$

where L = the mileage of loop,
and R = balancing resistance in the rheostat with the distant battery switch to earth.

For balancing an aerial line

$$K_1 = \cdot003L \qquad r_1 = \cdot106R$$
$$K_2 = \cdot0022L \qquad r_2 = \cdot318R$$

These values only hold for lines on which the leakage current is a minimum. In the case of low insulation the capacities but not the timing resistances will be smaller.

It must be admitted, moreover, that even under the best conditions it is often possible to improve the balance by using a lower capacity and a lower resistance in the first section than

* "The Duplex Balance," by James Fraser, *P.O.E.E. Journal*, Vol. X, p. 133.

those given by the formulae. In fact, the attainment of a really close balance is still a matter of experience and good judgment.

A.T.M. Universal Duplex Unit. The modern Mansbridge condenser occupies a fraction of the space of the old tinfoil and paraffin paper type with the result that variable condensers of relatively small dimensions have been produced. A particularly ingenious arrangement has been devised by H. H. Harrison in which the plugs of the $7\frac{1}{2}$ m.f. condenser are replaced by a radial switch. Three separate units each of ·25 m.f. are added to 1, 2, 3, 4, etc. microfarad units, and the radial switch is so constructed that in moving from 1 to 2 or 3 to 4 there are three intermediate positions which add one, two, or three ·25 units to the lower reading, thus giving the full capacity of the condenser by gradations of ·25 m.f. at the cost of only three extra ·25 m.f. units.

The A.T.M. Universal duplex unit which embodies this idea contains a rheostat, condensers, timing resistances, a differential milliampere meter and relay. The relay is connected on the top of the case by spring clips, and within the case the set can be altered by movement of four simple link switches for up or down office with primary or secondary battery working. Two of these units may also be used as a duplex repeater. In the event of a fire, the duplex units would enable communication to be restored almost immediately provided lines were available.

Battery Power and Current Required. The current required is from 14 to 17 mA, and is calculated for the conditions of simplex working, No. 1 cells being used. The local battery is a three-cell Leclanché No. 1.

CHAPTER X

THE QUADRUPLEX

Quadruplex working consists in the simultaneous transmission of two messages in each direction over a single wire connecting two stations. It is accomplished by taking advantage of the fact that currents may differ from each other in direction and in strength. Two keys are employed, viz. the reversing or *A* key which determines the direction of the current, and the increment or *B* key which determines its strength. One of the two relays used in conjunction is polarized and the other non-polarized. The polarized relay is of the Post Office Standard *B* pattern, in which the tongue is, of course, only moved over to *M* when the current passes in the direction *U* to *D*. The non-polarized relay, upon the other hand, is actuated by a current in either direction provided that it is sufficiently strong to overcome the pull of the antagonistic spring. This relay is so adjusted that unless the strength of the current is increased by depression of the increment key its armature is unaffected. The polarized relay is affected only by a current in the direction *U* to *D* and this occurs solely when the reversing key is down.

It will, therefore, be seen that the two relays may be selectively actuated by the two keys. By depressing the reversing key a current passes through the relays in the direction *U* to *D*, but it actuates the polarized relay only, its strength being insufficient to overcome the pull of the spring upon the non-polarized relay. Depression of the increment key alone actuates the non-polarized relay only, because the current passes in the direction *D* to *U*. If both keys are down a current of full strength passes through both relays in the direction *U* to *D*, and both are, therefore, actuated.

The whole arrangement is duplexed upon the differential principle by splitting the sending currents equally through the differentially wound relays and galvanometer. The details of the instruments will, however, be reserved until the working of the set as a whole has been considered.

Skeleton Connections. The skeleton connections of a quadruplex set are depicted in Fig. 166. The reversing

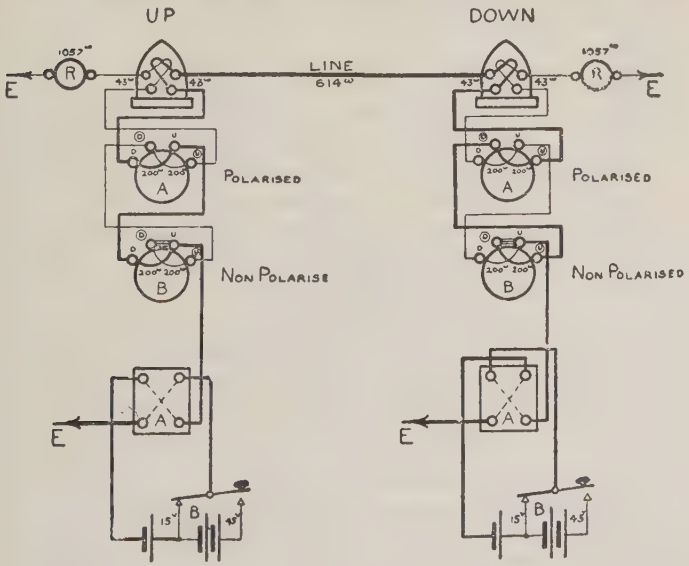

Fig. 166. Principle of Quadruplex

key is a double current key with its switch at send. The increment key is here represented by an ordinary single current key, and at present calls for no further comment. The negative pole of the battery is joined to Z of the reversing key, and C is taken to the centre of the increment key. When this key is at rest only a part of the battery is connected to the reversing key, but when it is depressed the whole battery is so

connected. The reversing key controls the direction of the current and the increment key its strength.

The left side of the reversing key is earthed and the right side goes to the split of the non-polarized relay. The right-hand coil of the galvanometer, the plain coil of the *A* side relay, and the same coil of the *B* side relay are connected in series to the line at the up station. The other coils of the two relays and galvanometer are similarly joined in series to the rheostat which contains resistance equal to that of the line and distant apparatus.

When all the keys are at rest the conditions which obtain are similar to those of a double current duplex, viz. the batteries at the two stations combine together to produce a current in the line circuit twice as large as that in either of the compensation circuits. This preponderating current must be in the spacing direction, and in order to effect this and the combination of the batteries, the connections at the down office have to be modified. Firstly, to effect the combination of the batteries the two battery wires upon *Z* and *C* of the reversing key are crossed, and, secondly, the line and rheostat change sides of the galvanometer, and thus a spacing effect is normally produced at the down office.

Value of the Current under Various Conditions. The working of the set will be most clearly understood by giving definite numerical values to the various factors which determine the currents in the various parts of the circuit. With the *B* key at rest an E.M.F. of 15 volts is connected to the *A* key, and with the *B* key depressed this E.M.F. is raised to 45 volts. The battery has been assumed to have no internal resistance in order to simplify the calculations involved. This assumption does not involve any appreciable error in the general results which will be obtained, but it will subsequently be indicated how far these results must be modified to accord with strict accuracy. The resistances of the remaining parts of the circuit are clearly marked upon the diagram (Fig. 167).

The total resistance of the line circuit is $200 + 200 + 43 + 614 + 43 + 200 + 200 = 1500\omega$. The resistance of either

compensation circuit is 200 + 200 + 43 + 1057 = 1500ω (*vide* page 315).

Condition 1. With all the keys at rest the path of the line circuit current is from the positive pole of the 15-volt up battery to earth, through and joining with the 15-volt down battery through the line coils of both relays (direction *D* to *U*) and the galvanometer, along the line through the line coils

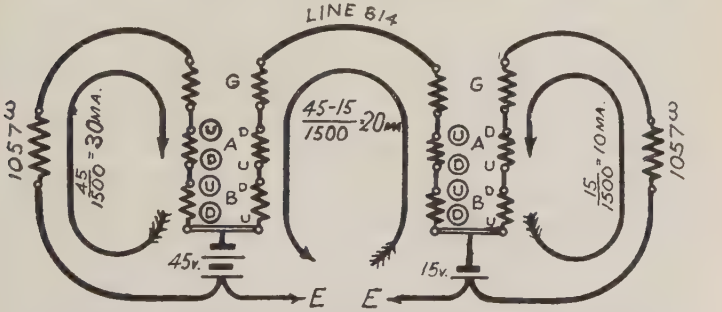

FIG. 167. CURRENTS IN A QUADRUPLEX CIRCUIT WITH THE DOWN *A* KEY AND UP *B* KEY DEPRESSED

of the up galvanometer and relays (*D* to *U*) and thence back to the negative pole of the battery. The current in this circuit is produced by 15 + 15 = 30 volts, and is therefore $\frac{30}{1500}$ = 20 mA. The compensation currents are each $\frac{15}{1500}$ = 10 mA and in the direction *U* to *D*, consequently both *A* relays are held to spacing by the 10 mA preponderance of the line current from *D* to *U* in the relays. The *B* relays are unaffected because th y are adjusted to be unaffected by a preponderance of 10 mA.

Condition 2. With both *A* keys down both *A* relays will mark due to the reversal of the current.

Conditions 3 *and* 9. With one *A* key down and one at rest the batteries oppose, and their compensation circuits respec tively space and mark with the 10 mA which their own batteries produce in them. As stated above, this current of 10 mA upon one coil of the relay is not sufficient to actuate the *B* relays.

Condition 4. If both *B* keys are depressed an E.M.F. of 45 volts is connected to the *A* key at each end. With both the *A* keys at rest the paths and directions of the currents are

identical with those described when the *B* keys were also at rest. The strength of the current in each part of the circuit is, however, three times as great.

$$\text{Line circuit current} = \frac{45 + 45}{1500} = 60 \text{ mA}$$

$$\text{Current in each compensation circuit} = \frac{45}{1500} = 30 \text{ mA}$$

The current in the line coils of both stations' relays is from *D* to *U* and therefore both *A* relays space, but the *B* relays, being non-polarized, both mark due to the effect of $60 - 30 = 30$ mA upon one coil of each relay.

Condition 16. This is as in Condition 4, but with the currents in the reverse direction. All four relays are actuated.

Conditions 5 *and* 15. If an *A* key is depressed while both *B* keys are still down the batteries oppose each other in the line circuit, and the compensation circuits are therefore left unopposed to produce their effects. Each carries a current of 30 mA produced by the full power, and therefore both *B* relays are actuated. At the end where the *A* key is depressed the current is in the direction *D* to *U*, and therefore the *A* relay spaces, but at the distant end a mark is registered because the compensation current is there flowing in the *U* to *D* direction.

Conditions 6 *and* 11. One *B* key only is depressed. The E.M.F. acting in the line circuit is $15 + 45 = 60^{\text{v}}$, and the current is therefore $\frac{60}{1500} = 40$ mA. The direction of the line current is from *D* to *U* and is produced by the batteries acting together. At the end where the *B* key is depressed the compensation current is $\frac{45}{1500} = 30$ mA, and the net effect at that end is therefore $40 - 30 = 10$ mA in the direction *D* to *U* through both relays. Both these relays therefore space. At the distant end the compensation current is produced by the smaller E.M.F. and is $\frac{15}{1500} = 10$ mA in the direction *U* to *D*. The net effect is therefore $40 - 10 = 30$ mA upon the line coils of the relays. This actuates the *B*, but not the *A*, relay because the direction of the preponderating line current is from *D* to *U*.

Conditions 7 *and* 12. One *A* key and the distant *B* key depressed. Let the up *B* key and the down *A* key be depressed. The current in the line circuit is due to the larger up battery

sending a current through the smaller down battery. This current is equal to the difference in the E.M.F.'s divided by the resistance of the line circuit. It is $\frac{45-15}{1500} = 20$ mA in the direction D to U at both ends. The compensation currents at the down and up offices are respectively 10 mA direction D to U, and 30 mA direction U to D. At the up office the difference between the compensation and line currents is $30 - 20 = 10$ mA in the direction U to D. The up A relay therefore marks, but the B relay is unaffected. At the down station the line current (20 mA) flows through both relays in the direction D to U. The current in the compensation circuit is 10 mA and in the same direction, viz. D to U. The effects of the line and compensation currents (20 mA and 10 mA respectively) are therefore added together, and are equivalent to 30 mA upon one coil of the relay. The A relay is unaffected, but the B relay is actuated. References to the skeleton diagram given in Fig. 166 will serve to make matters clear.

In explaining the above condition it was stated that the larger battery sent a current of 20 mA through the smaller one. This statement is scarcely correct since the smaller battery is at the same time assumed to be sending a current through its compensation circuit. The numerical values of the currents obtained by the assumption are accurate, but the actual path of the current is this: the 20 mA flowing through the line circuit divides into two equal parts when it reaches the split of the relay, one of which parts flows through the battery in opposition to its E.M.F., and the other half flows round the compensation circuit.

Summary of Quadruplex Conditions. A schedule showing all the possible combinations of the positions of the keys and the resulting conditions is given on page 315.

1. *Conditions* 1, 2, 3 *and* 9 are precisely similar to an ordinary double current duplex circuit with 15^{v} batteries and line and compensation circuit resistances of 1500^{ω}.

2. *Conditions* 4, 5, 15, *and* 16 are precisely similar to an ordinary double current duplex circuit with 45^{v} batteries and line and compensation circuit resistances of 1500^{ω}.

3. *Conditions* 6, 10, 11 *and* 14.—In these cases the *A* battery at one end combines with the *B* battery at the other end, with the result that at the end where the *B* key is depressed the net effect is that of the *A* current, whilst at the other end a preponderance equal to the *B* current results.

4. *Conditions* 7, 8, 12, *and* 13. In each instance the *A* battery opposes the distant *B* battery. At the end where the *B* key is depressed the compensation circuit preponderates to the extent of the value of the *A* current whilst at the other end the line and compensation current effects add together and so actuate the *B* relay.

THE "B KICK."

A serious difficulty arises in quadruplex working owing to the fact that the reversal of the current through the circuit by the *A* key occupies a definite interval of time. The continuous depression of the *B* key actuates the distant *B* relay, and if, whilst this mark is proceeding, the *A* key be depressed and released, breaks will occur in the signal each time the position of the *A* key is changed. The *B* relay is not affected by the *A* current of, say, 15 mA, and assuming that it will be actuated by 17 mA only, then the spring of the *B* relay will pull the tongue of the relay away from the marking contact from the instant at which the current falls below 17 mA until it rises again to 17 mA in the reverse direction. The time taken for the current to fall from its maximum value to zero, and then to rise to its maximum value in the reverse direction is proportional to the product of the capacity and resistance of the circuit (Appendix A). But, in addition to this, there is also the time occupied by the *A* key in reversing the direction of the current. This can, however, be reduced to a minimum by carefully adjusting the contacts of the *A* key, so that there is an instant in which the lever is just touching both upper and lower contact springs.

QUADRUPLEX CONDITIONS.

Condition	Position of Keys				Compensation Circuit				Line Circuit		Nett Effect				Result				Effect due to Line or Compensation Circuit	
	Up		Down		Up Circle Coil		Down Plain Coil		Up Plain Coil Down Circle Coil		Up		Down		Up		Down			
	A	B	A	B	Current	Direction	Current	Direction	Current	Direction	Current	Direction	Current	Direction	A	B	A	B	Up	Down
1	—	—	—	—	10	UD	10	UD	20	DU	10	DU	10	DU	S	S	S	S	L	L
2	×	—	×	—	10	DU	10	DU	20	UD	10	UD	10	UD	M	S	M	S	L	L
3	×	—	—	—	10	DU	10	UD	0	—	10	DU	10	UD	S	S	M	S	C	C
4	—	×	—	×	30	UD	30	UD	60	DU	30	DU	30	DU	S	M	S	M	L	L
5	×	×	—	×	30	DU	30	UD	0	—	30	DU	30	UD	S	M	M	M	C	C
6	—	×	—	—	30	UD	10	UD	40	DU	10	DU	30	DU	S	S	S	M	L	L
7	—	×	×	—	30	UD	10	DU	20	DU	10	UD	30	DU	M	S	S	M	C	L+C
8	×	×	—	—	30	DU	10	UD	20	UD	10	DU	30	UD	S	S	M	M	C	L+C
9	—	—	×	—	10	UD	10	DU	0	—	10	UD	10	DU	M	S	S	S	C	C
10	×	×	×	—	30	DU	10	DU	40	UD	10	UD	30	UD	M	S	M	M	L	L
11	—	—	—	×	10	UD	30	UD	40	DU	30	DU	10	DU	S	M	S	S	L	L
12	×	—	—	×	10	DU	30	UD	20	DU	30	DU	10	UD	S	M	M	S	L+C	C
13	—	—	×	×	10	UD	30	DU	20	UD	30	UD	10	DU	M	M	S	S	L+C	C
14	×	—	×	×	10	DU	30	DU	40	UD	30	UD	10	UD	M	M	M	S	L	L
15	—	×	×	×	30	UD	30	DU	0	—	30	UD	30	DU	M	M	S	M	C	C
16	×	×	×	×	30	DU	30	DU	60	UD	30	UD	30	UD	M	M	M	M	L	L

NOTE — = Key at rest. × = Key depressed. UD = Direction U to D. DU = Direction D to U.
S = Space. M = Mark. L = Line Circuit. C = Compensation Circuit.

It will, therefore, be recognized that there is an interval of time during which the spring of the *B* relay pulls the tongue away from the marking stop, thus producing a break in the *B* signal. This effect, generally termed the "*B* kick," must be counteracted before quadruplex working is possible. Quadruplex working is, then, practicable only when these intervals of break

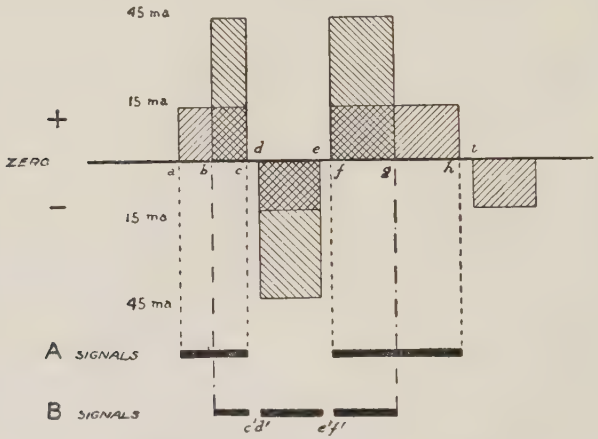

FIG. 168. INTERACTION OF KEYS ON A QUADRUPLEX CIRCUIT

in the *B* signals due to the change in position of the *A* key are bridged over, and the various quadruplex systems which have from time to time been devised differ principally in the device adopted to counteract the "*B* kick."

The currents due to the *A* key sending the letter "a" whilst the *B* key is sending a dash are shown graphically in Fig. 168. The direction and magnitude of the currents are indicated by the position and height of the rectangles above or below the zero line, and the duration of the currents by the width. Whilst the *A* key is sending the first dot *ac* the *B* key also is depressed at *b*, thus raising the current from 15 mA to 45 mA,

and it will first be assumed that the current rises to its full value and reverses instantly. At c the A key is released, the key short-circuits the battery momentarily and then joins it up in the reverse direction. With a badly adjusted key, i.e. one in which there is a comparatively long interval between the moment at which the battery is short-circuited and that at

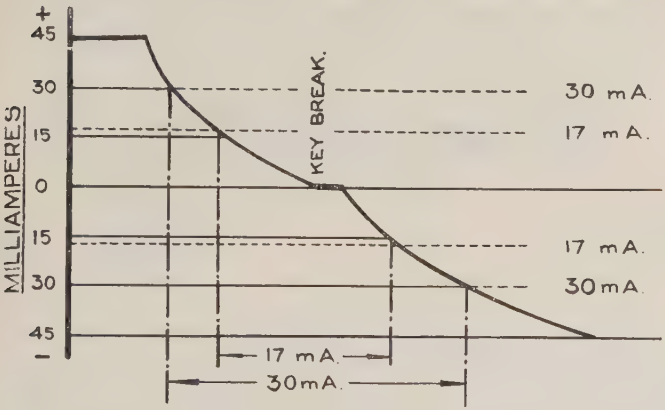

Fig. 169. Curve Showing Signal Shape

which it is connected in the reverse direction, an interval of time cd comparable in this instance with a quarter of the length of a dot, elapses before the full current is re-established in the reverse direction. During this time the B relay is unmagnetized, and the spring therefore breaks the mark from c^1 to d^1. The mark is again broken at e^1f^1 when the A key again changes position.

But the current does not change in direction through the circuit instantaneously (Fig. 169) and, therefore, the period of break extends from the time when the current falls to, say, 17 mA until zero is reached, and then again after the interval due to the key until the current has risen to 17 mA in the reverse direction.

Referring to Fig. 168, the conditions during the progress of the B mark from d to g are represented in

skeleton by Fig. 169. The conditions with the *A* key at rest extend from *d* to *e*, and when depressed from *f* to *g*. With the *A* key at rest, and taking the values given in the table on page 315, the current through the line and line coil of the down relays is 40 mA, whilst the current in the compensation coil is 10 mA. If, now, the up *A* key be depressed the current in the line has to change to 20 mA in the reverse direction. When the line current has fallen to 10 mA the *B* relay

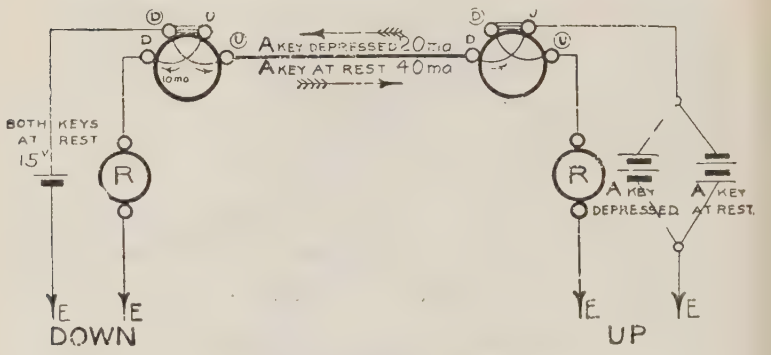

Fig. 170. The "*B* Kick"

will be entirely unmagnetized, since the compensation current is 10 mA in the reverse direction. It will, therefore, clearly be recognized that since a definite interval of time is taken for the current to fall to zero and to rise again in the reverse direction—a time which is increased by the time taken by the key to reverse the battery—there is likewise a definite interval of break in the *B* signal.

The Condenser "B" Side Arrangement. The present standard device has been evolved from the suggestion of A. W. Martin to bridge over the interval of break by the action of a condenser placed across the terminals of the sounder on the *B* side. The device simplifies the adjustments and is capable of working over

circuits of much higher KR than the uprighter device (limit KR = 30,000) which it replaced.

A battery having an E.M.F. of 40^{v} (40 No. 1 cells) is connected in series with a 3-plug resistance box having a range of 100$^{\omega}$ to 700$^{\omega}$ by gradations of 100$^{\omega}$, the *B* side 900$^{\omega}$ sounder and a 50$^{\omega}$ resistance coil to *S*

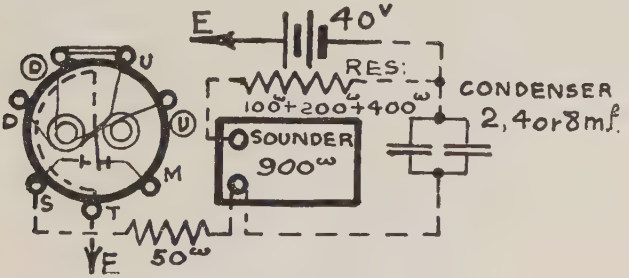

Fig. 171. Standard Arrangement of the "*B*" Side

(Fig. 171). A condenser which can be joined up to give a capacity of 2, 4, or 8 m.f. (Fig. 172) is placed across the sounder and variable resistance.

The function of the 50$^{\omega}$ coil is to reduce the value of the current which would otherwise flow through the

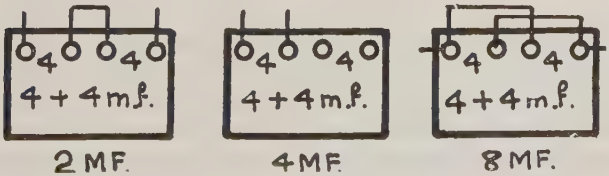

Fig. 172. Methods of Joining Up the Condenser

relay contacts at the moment at which the tongue makes contact with *S*. For, whilst the condenser is being charged it acts as a path of negligible resistance, and therefore the current flowing through the relay contacts would, but for the interposition of the 50$^{\omega}$ coil, be so high as to produce electric welding of the

contacts. This actually occurred in earlier arrangements, and it was to prevent it that the 50^{ω} coil was added.

When the tongue is held over to S by the B current, the condenser is charged as shown in Fig. 173 to a difference of potential which, but for the presence of the 50^{ω} coil, would be equal to, and is only slightly less than, the E.M.F. of the battery. If now the A key is also depressed, the spring of the relay breaks the local circuit until the current has risen in the reverse direction to a value sufficient to pull the tongue over to S

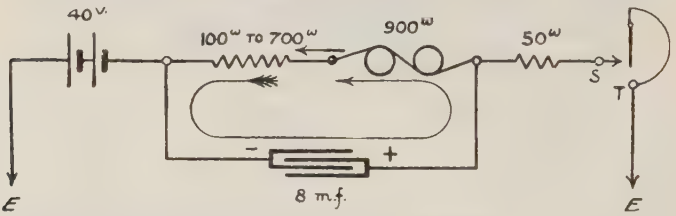

Fig. 173. Action of Condenser on "B" Side Local

again. When the current is broken at S the self-induction of the sounder causes an E.M.F. to be set up in such a direction as to tend to prolong the current, but in addition the condenser discharges through the sounder and resistance coils as indicated by the feathered arrow. The condenser discharge and the current due to the inductance of the sounder add together, and by their passage through the sounder prevent the magnetization of the cores of the latter from falling sufficiently to release the armature before the current is re-established by T moving back again to S.

Upon short circuits under 100 miles in length a 24^{v} battery only is used, and the resistance inserted in the battery resistance coils is given a much lower value.

The "A" and "B" Keys. The A key is the ordinary double current key with adjustable contacts. It is adjusted so that it short-circuits the battery in moving

up and down for the shortest possible interval of time. This condition cannot be ensured by sight, and adjustment should be made with a galvanometer and three cells.*

1. Connect as in Fig. 174. Insulate the upper and lower contacts on one side of the key by means of pieces of thin clean paper and adjust the other pair until a deflection is obtained when the key is held in the midway position. The adjustment should be such

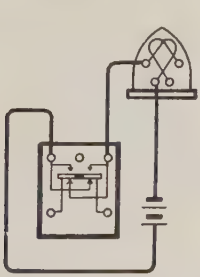

FIG. 174. KEY TEST FOR DURATION OF SHORT CIRCUIT

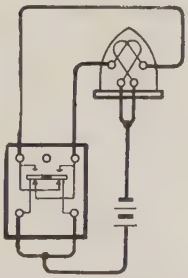

FIG. 175. KEY TEST FOR SIMULTANEITY OF CONTACTS

that the slightest deviation from the midway position causes the needle to return to zero.

2. Withdraw the paper, insulate the contacts on the other side of the key, and repeat the operation.

3. Connect as in Fig. 175. With all contacts uninsulated, slow depression of the key should not produce a deflection on the galvanometer. This condition will indicate that the contacts make and break simultaneously. Owing to slight defects in the springs it is sometimes difficult to obtain exact simultaneous make and break, but any key requiring appreciable alteration after adjustments (1) and (2) should not be used on quadruplex circuits.

For the *B* key, the right-hand half of a six-terminal

* "The Quadruplex Telegraph System," by C. J. Mercer, I.P.O.E.E. Paper No. 42, 19th March, 1912.

reversing key is employed. This key is equivalent to a double current key with the switch omitted and the four contact springs carried to four terminal screws at the top of the key (Fig. 176). The key should be adjusted precisely as described in the case of the *A* key and a momentary short circuit of the shortest possible duration obtained during the movement of the key.

Sparking, Battery, and Earthing, Resistance Coils. It has been shown that the battery is short-circuited by the keys when changing position, and in order to

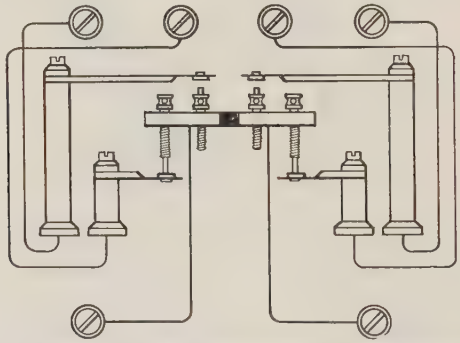

Fig. 176. Connections of Six-terminal Reversing Key

prevent the passage of an excessive current and sparking at the contacts of the *B* key when the *B* battery is short-circuited by the *B* key, a 50^{ω} (marked *A*, Fig. 177) metal-cased resistance coil is placed in the lead of the *B* battery. This is termed the sparking resistance.

When the *B* key is at rest a resistance (marked *B*, Fig. 177) equal to the internal resistance of the *B* battery and its 50^{ω} sparking coil is placed in the battery tap wire.

The split wire is taken through a two-way switch so that the batteries and keys may be cut out and an earthing resistance (marked "Res. coil," Fig. 177)

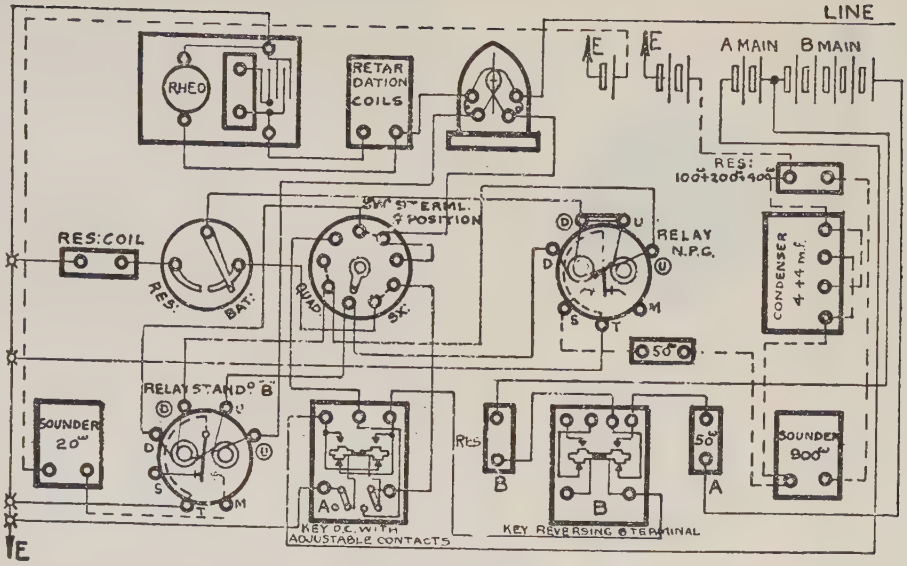

FIG. 177. QUADRUPLEX UP STATION (INDIVIDUAL OR PRIMARY BATTERIES)

To convert to " universal connections " connect the line to the top left and compensation circuit to the top right terminals of the galvanometer

equal to that of the battery circuit (internal resistance of the whole battery + the 50^{ω} spark coil) may be substituted. This provision facilitates the attainment of an accurate capacity balance.

Effects of Short-circuit in the Intermediate Position of the Keys. The momentary short-circuits intro-

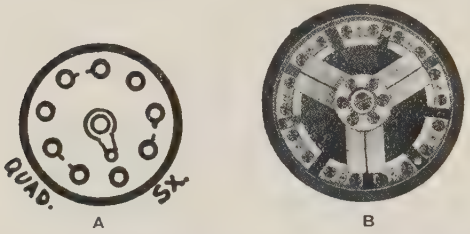

FIG. 178. NINE-TERMINAL TWO-POSITION SWITCH
A. Connections at simplex. B. View of back of switch at duplex

duced by the keys have no appreciable effect upon the distant balance. The battery resistance has the following values : (*a*) the normal resistance, viz. that of the full battery + the 50^{ω} spark coil, (*b*) the resistance of the *A* battery + half the *B* battery and spark coil when the *B* key short-circuits, and (*c*) nil, when the *A* key short-circuits. The conditions are only of momentary duration, and the battery resistance is not a large percentage of the total circuit resistance.

Connections. The full connections of an up station are shown in Fig. 177. The only point calling for comment is that a nine-terminal two-position switch is added to provide for simplex working during slack periods, and thus to avoid the waste of energy due to the battery current flowing whilst the circuit is idle. Further, the circuit when simplexed can be concentrated. This switch when turned to simplex (Fig. 178) modifies the connections as indicated in Fig. 179, the rheostat being left in series with the *A* relay.

The quadruplex connections are comparable with

those of the skeleton diagram given in Fig. 166, and the following points may be noted—

1. The sending current splits at the *B* relay.

2. The up station normally connects negative to the split.

3. Under normal conditions the relays space due to

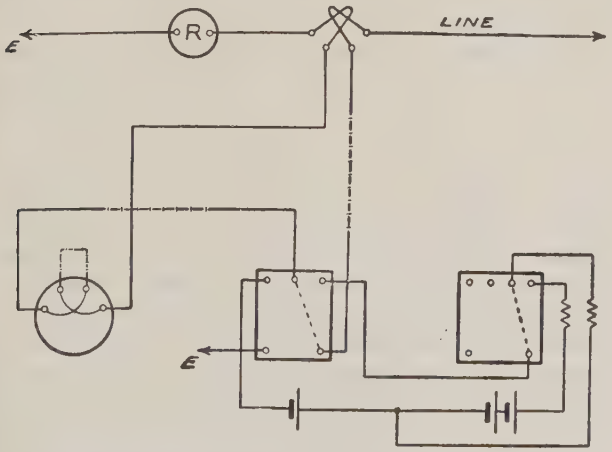

Fig. 179. Connections when Quadruplex Switch Turned to Simplex

the combination of the batteries (this settles the joining up of the line and compensation circuits).

4. The left side of the *A* key is earthed and the right side is connected to the split (may be deduced from 3).

5. At an up office *Z* and *C* of the *A* key are respectively joined to *Z* of the battery and lower right terminal of the *B* key (*B* key determines whether the tap or full battery goes to the *A* key).

6. For a down office—

(*a*) Reverse the connections of the two wires on the upper terminals of the galvanometer.

(*b*) Reverse the connections of the two wires on the lower terminals of the galvanometer.

(*c*) Reverse the connections on *D* and *U*-circle of the polarized relay.

(*d*) Reverse the connections on *Z* and *C* of the key.

Universal Connections. At night or during slack periods many lines and apparatus sets are joined to concentrator switches (*q.v.*), and it is necessary that any set of apparatus may be used at simplex to work to any direct current circuit on the switch. This involves identity of connections and the abandonment of up and down station connections between line and earth. It also renders the ordinary combination method of duplex working inadmissible. The apparatus sets at all offices are, therefore, joined up in the same way and the opposition method of duplex working is adopted. When all the keys are at rest, the batteries oppose each other. This change is effected by joining the line to the left and the compensation circuit to the right-hand top terminals of the galvanometer.

Balancing. The balancing of the circuit is accomplished in the same way as in duplex working, but there are the distinct advantages of the larger power and the earthing switch. Balancing should be effected with the full power (i.e. with the *B* key down), and the *A* key should be used in the same way as the double current key in duplex balancing. The distant earthing switch should be turned to " resistance " for capacity balancing, and the rules previously deduced (page 306) apply with equal truth to this operation.

Adjustment. The adjustment of a quadruplex circuit is by no means a difficult matter, and the adjustments are reasonably permanent if carefully made. The whole of the trouble lies upon the *B* side, and it will be desirable to indicate a few obvious deductions from previous considerations. The *B* relay is worked by any current which attains a certain value greater than the *A* current. The best adjustment is therefore obtained when the *A* marks are just cleared off the *B* side. Assuming the values given in Fig. 169, it will be seen that if the

B relay only marks when the effective current has attained 25 mA, the effect of the "*B* kick" will be far larger than if it begins to work when the effective current has attained 17 mA. If the relay works with the smaller current then the tongue is not released until the current has fallen from 30 to 17 mA instead of when it has fallen to 25 mA, and it is again actuated when the current has risen to 17 mA, instead of having to wait until it has increased by a further 8 mA. The term "effective current" has been used to designate the difference between the values of the current in the two coils of the relays.

In clearing the marks off the *B* relay it is preferable to do this by removing the armatures further from the cores instead of by increased tension upon the spring. This adjustment can be made by moving the contact screws. The tension upon the spring should not be greater than is essential for reliability of action. The play of the tongue may be made as small as necessary.

The adjustment of the *A* relay and the sounders should call for no comment, as the matter has been fully considered previously. The reader is particularly advised always to locate the point of defective regulation and to apply the remedy where the defect exists. A defect at one point may be partially rectified by defective regulation at a second one, but this process inevitably leads to unreliable adjustments.

It is essential that the ratio of the *A* and *B* currents shall be as one is to three, and that the powers employed at each end shall be approximately equal.

Decrement Working. Decrement working consists in arranging that the full battery shall normally be connected to the *A* key, and that the effect of depressing the *B* key shall be to reduce the current. This is effected by reversing the two wires on the top of the *B* key. With all the keys at rest the full power of the battery is in use, and both *B* relay tongues are held to *S* against the force of the spring. The *B* side sounder 20^{ω} and

local battery are then joined up between T and M of the B relay and the play of the tongue of this relay is made as great as is consistent with the reception of clear, sharp signals. The "B kick" effect is eliminated on short lines, because with the B key at rest the depression of the A key only causes the tongue to kick towards M, and the current is re-established in the reverse direction before the local circuit can be affected. It is, therefore, unnecessary to provide the comparatively large local battery and condenser, etc., required on the B side of increment quadruplexes.

The method is confined to short special event circuits where the power at the grand stand has usually to be provided by primary batteries. Where a long line is concerned the arrangement fails because the time of reversal of the current in the line is too long.

Use of Quadruplex on Short Lines. On short lines, such as those between a head office and a racecourse, it is necessary to balance the inductance of the distant relays. The addition of one coil of a standard relay and one coil of a non-polarized relay in series in each compensation circuit will secure a balance. Where secondary cell working is employed at the head office, a shunted condenser should be inserted in the line.

The current should first be adjusted to the usual values by the insertion of resistance and then suitable capacity added to wipe out the effects of the unbalanced inductance. The use of 24^{v} and 80^{v} from the Head Post Office aggravates the difficulties due to the inductance unbalance when no resistance is added owing to the excessive current.

Current Required and Type of Battery Used. No. 1 cells are used upon ordinary, and No. 0 cells on very heavily worked quadruplex circuits, and the current required is from 10 to 15 mA (30 to 35 degrees on galvanometer) upon the A side and from 30 to 45 (55 to 60 degrees) for full power. The ratio of at least three to one should always be maintained. The two

parts of the battery are often termed the *A* and *B* batteries, but it has been seen that the depression of the *B* key introduces the whole power, i.e. both *A* and *B* batteries.

The *A* side local is a three-cell No. 1 Leclanché. On the *B* side local 40 No. 1 cells are used.

The Diplex. The diplex consists of a quadruplex, at one end of which the *B* key and the major portion of the battery power ordinarily required are omitted, and at the other the corresponding *B* relay is not needed. This arrangement provides for the simultaneous transmission of two messages in one direction and one in the opposite direction. At racecourses and other places where pecial arrangements are frequently made, it often happens that practically the whole of the work consists in the transmission of messages *from* the special office. Where this is the case there is no advantage in providing two receiving paths at the special office, but one such path is, of course, essential for corrections and acknowledgments of messages transmitted.

The connections of such a circuit are shown in Fig. 180, the path of the line current being indicated by the thickened lines.

Wheatstone on the "A" Side. The polarized relays may be substituted by Wheatstone receivers and transmitters may be added to a quadruplex circuit to provide Wheatstone working on the *A* side. With very careful adjustment it is sometimes possible to get 100 words a minute with the *B* side working at the same time. In general, however, it is better to suspend the *B* side, while Wheatstone working is in progress. The arrangement most generally employed is to add a transmitter at the sending, and a receiver at the receiving end of a diplex circuit. But no attempt is made to work the *B* s de when the transmitter is running. The connections of such a circuit with the usual local sounders, etc., omitted is shown in Fig. 181. The path of the line current has been thickened to

facilitate tracing. The resistances added in the line circuit are to reduce the current on short lines to the desired level and to meet the difficulty described on page 328.

Other Quadruplex Systems. A quadruplex circuit can

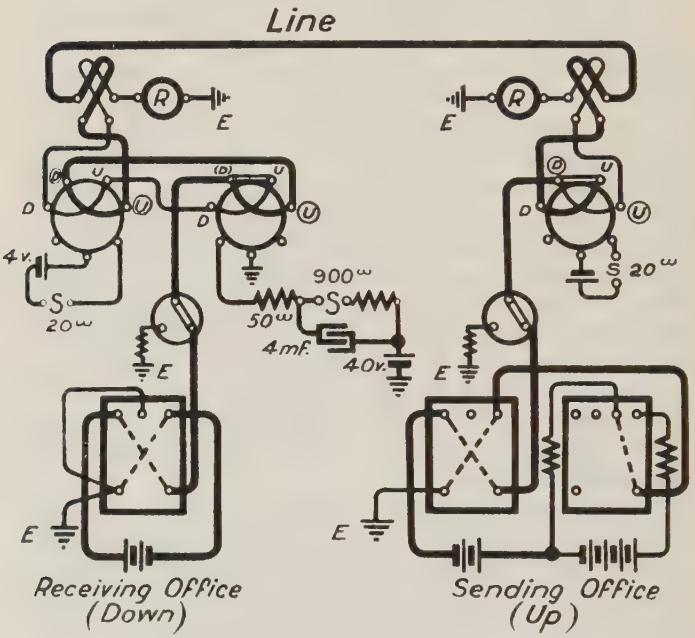

Fig. 180. Full Connections of a Diplex Circuit

be worked either by the combination method used exclusively by the Post Office for many years or by making the batteries normally oppose each other. This is now the standard practice for all new circuits. Again, bridge, instead of differential, duplexing could be employed. With ordinary apparatus, the voltages required would be very high.

The quadruplex systems of America* differ very considerably from our own. In the first place, the operator's A and B keys are employed to complete local circuits which work transmitters or pole changers. The power for working the circuit is furnished by + and

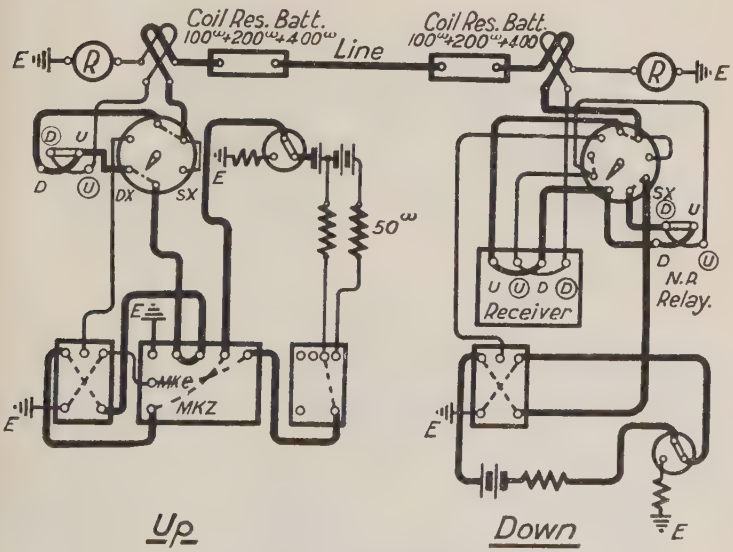

Fig. 181. Diplex with Wheatstone on the A Side

– direct current generators, but the variation in voltage applied is arranged by a potentiometer method. (Fig. 182.)

The B side relay has a third, or holding, coil and a condenser bridged between the line and compensation circuits. Hence, the discharge of the condenser C through the holding coil H occurs and is governed solely by the A reversals without in any way affecting the B signals, whereas the Post Office B side operates also at the conclusion of every B side mark. In

* "Some Notes on American Telegraphs," by J Hume Bell, *P.O.E.E. Journal*, Vol. VII, p. 68. "More about Quadruplex," by J. M. Fernandez Lamothe, *ibid.*, Vol. VII, p. 327.

practice, this effect is not serious until the limit of quadruplex working is approached.

In what is known as the Argentine *B* side (Fig. 183) the sounder is normally short-circuited by the

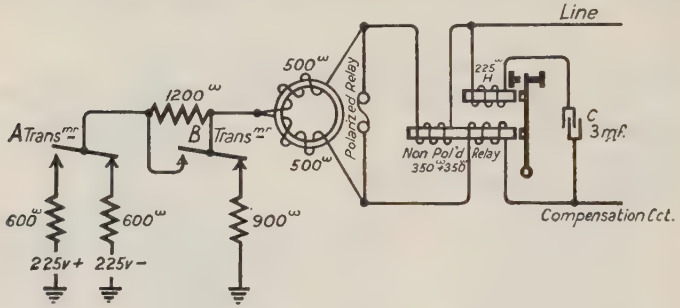

Fig. 182. American Quadruplex

tongue of the *B* relay. When the relay is operated, the short-circuit is removed by the tongue moving over to the right, where it banks against an insulated stop.

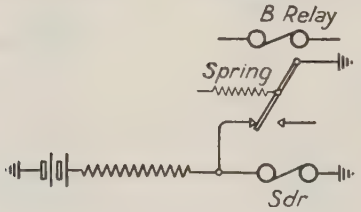

Fig. 183. Argentine *B* Side

If the reversal of the current is rapid as on short lines, the tongue has not time to reach the left stop and so merely chatters on rest stop. If, however, on longer lines, the tongue should make a momentary contact with the left screw, the inductance of the sounder continues the mark by the path to earth through the tongue of the relay.

On very short lines it is possible to replace the standard *B* side condenser arrangement by a polarized

sounder and battery so joined between T and M that normally a current flows through the completed local circuit in such a direction as to oppose the spring. Marks are, therefore, made by the breakage of the local circuit when T leaves M. The tongue of the relay should be given fairly wide play.

Creed Quadruplex.* In this plan the signals are sent to line on both A and B sides by transmitters. These transmitters are geared together so that the

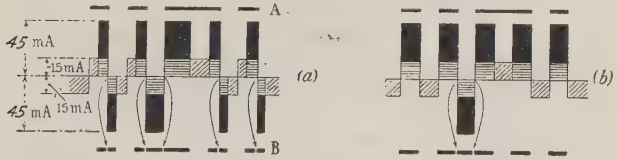

FIG. 184. PRINCIPLE OF CREED QUADRUPLEX

signals are in phase, i.e. so that the commencement and cessation of signals respectively coincide. Fig. 184 shows the letters F and L sent out on the A and B side when the A side signal is in advance of the B side signals. In this case, breaks occur in all the dots and twice in the B side dash. By ensuring that the A and B side transmitters are in phase, the conditions of Fig. 184 result. It will be found that no matter what signals are drawn, the "B kick" break due to the reversal of the A side transmitter occurs only in a dash. This enables the "B kick" effect to be completely eliminated and a Wheatstone speed of 130 words per minute is simultaneously obtained on both A and B sides of the quadruplex.

The messages are prepared on a keyboard perforator which produces the usual Wheatstone punched slip. The slips are passed through the A and B side transmitters which are of a simplified type owing to the

* The illustrations are taken from H. H. Harrison's Chairman's address, "The Art of Communication Engineering," to the Mersey and North Wales (Liverpool) centre, 3rd November, 1924. *I.E.E. Journal.*

low speed required. At the distant end of the circuit, the Creed receiving perforator reproduces a replica of the original punched tape, and this is translated into

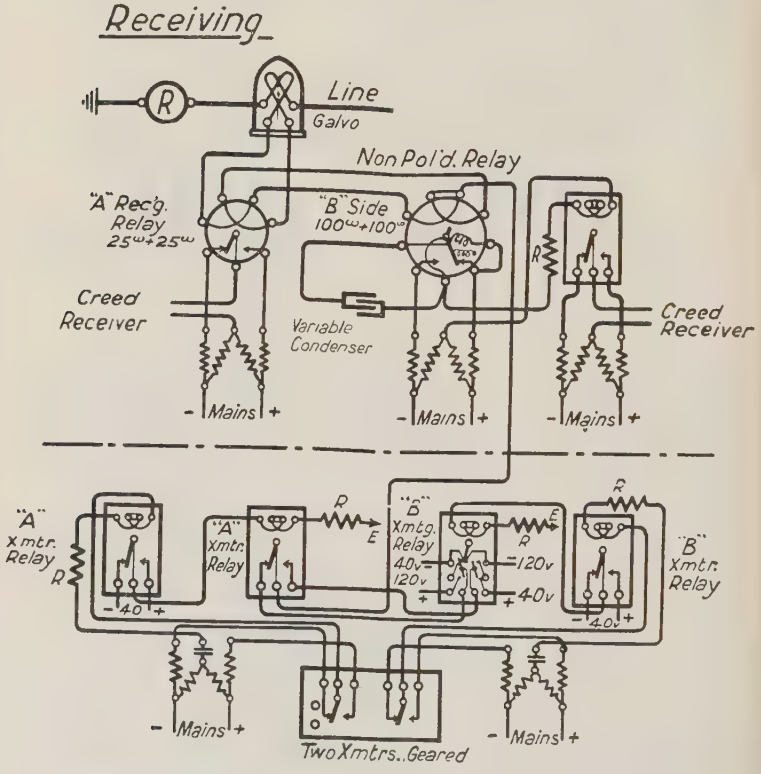

Fig. 185. Creed Quadruplex Connections

printed characters by the Creed printer (see Chapter XII). Of course, the signals may, if desired, be recorded by an ordinary Wheatstone receiver.

The non-polarized relay used on the *B* side of the

Creed quadruplex is fitted with laminated stalloy cores, upon which are wound the $100^{\omega} + 100^{\omega}$ coils.

On the spindle carrying the armatures there is fitted another armature, but much smaller and lighter, which is part of an adjustable electro-magnetic system, fitted inside the case in such a way that any current passing through this third coil would tend to make the relay mark.

When this relay is connected in the "B" side of a quadruplex, the third coil is arranged so that when the tongue moves over to the marking contact, the local current charges the variable condenser through the third coil, which hastens the transit of the tongue in the marking direction.

When the current is reversed on the line and the *B* key at the sending end is depressed, the variable condenser discharges through the third coil, thus holding the tongue of the relay on to the marking contact and bridging over the period during which there is no line current. The variable condenser discharges through the third coil when the tongue breaks contact with the marking contact, and as mentioned above, this discharge immediately restores the tongue to marking.

In the local circuit of the non-polarized relay is placed a secondary polarized relay which is kept adjusted neutrally so that the polarized relay must make contact on either the marking or spacing screws before the secondary relay will respond, thus ensuring that definite signals can only be obtained from definite movements of the non-polarized relay tongue. This secondary relay passes on the received signals to the Creed receiver.

The latest developments in connection with Creed quadruplex include the application of thermionic valve reception, polarized receiving relays on both *A* and *B* sides and the use of very small line currents on underground loops of a high *KR*. Successful quadruplex working has been obtained between London and

Manchester on a loop with a KR of ·088 second at a speed of 110 words per minute on each channel.

Morse Multiplex.* This plan, invented by H. H. Harrison, consists essentially in the connecting in phase of several transmitters by shafting and gears.

Two separate independent channels are shown in Fig. 186, but there is no limitation and three or four channels may be employed. The principle on which the method depends for obtaining more than one channel is that of division of the line time. A time

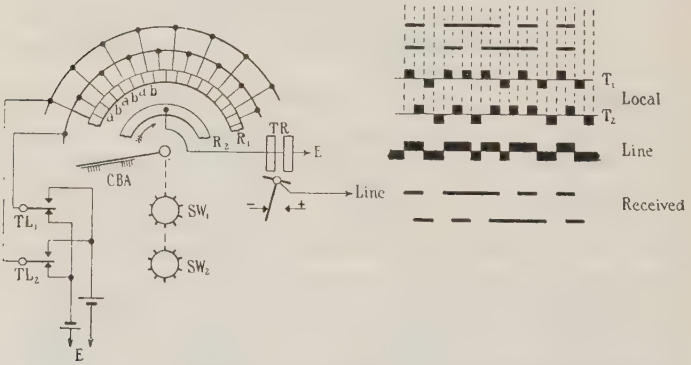

Fig. 186. Principle of the Harrison Morse Multiplex

unit is taken, say that of a dot impulse, and the line is given to each transmitter in turn for one-half, one-third, or one-quarter of the time unit. The transmitter star-wheels are geared together and to a revolving brush arm, which sweeps over circularly disposed contacts in pairs and gives the line to each transmitter lever TL_1, TL_2 in turn. The current-time chart at the right-hand side shows how the two sets of signals dovetail into each other for the letters "L" and "F." Their resultant in the line is unreadable and the system

* Chairman's Address to the Mersey and North Wales Centre of the I.E.E., "The Art of Communication Engineering," by H. H. Harrison, 3rd November, 1924, *I.E.E. Journal.*

may be considered to be "untappable." At the receiving end a synchronous rotary commutator is used to select the two sets of signals and distribute them to their appropriate receivers, which must be polarized.

The two distributors are kept in unison by connections generated from the signals.

QUADRUPLEX EXTENDED CIRCUITS

Split Quadruplex Repeater. By introducing a split quadruplex repeater at the intermediate station *B*, three duplex circuits, viz. *A* and *B*, *A* and *C*, and *B* and *C*, can be provided on a single line wire connecting *A*, *B*, and *C* (Fig. 187).

The apparatus employed at the up and down stations are respectively ordinary up and down station quadruplex sets. At the repeater station each line is joined to a quadruplex set with certain additional connections, and, when the switches of the double current keys are turned to send, the up and down lines may be worked from the repeater station as two independent quadruplex circuits.

It will be recognized that the tongues of the down polarized and non-polarized relays follow the motions of the down station's *A* and *B* keys respectively, and that similarly the up repeater relays are controlled by the up station *A* and *B* keys. The non-polarized or *B* side relays at the repeater office are each provided with the standard local circuit for the reception of the signals sent on the out-station *B* keys. The repeater station's *B* keys determine the voltage, and the local contacts of each *A* relay determine the direction of the current sent to the other relay split. In other words, the tongue of the up polarized relay replaces the down *A* key, and the tongue of the down polarized relay replaces the up *A* key. The arrangement is in fact that of the ordinary duplex repeater with the non-polarized relays, and 6-terminal reversing keys added to provide *B* side working.

It will suffice to indicate in general terms the effects which result when all the keys are depressed. The depression of the down station's keys bring over the tongues of the repeater down relays, which register marks on the repeater down sounders. The down *A* relay reverses the current applied to the split of the up

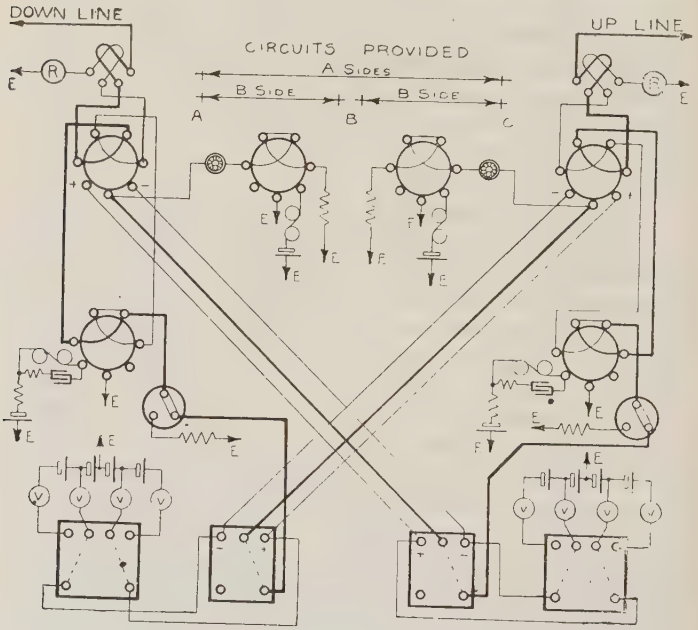

FIG. 187. SPLIT QUADRUPLEX REPEATER

relay, thus causing a mark at the up station on the *A* side. Similarly, a mark is made on the *A* side at the down station by the reversal of the current by the tongue of the up *A*-relay which moved over when the up *A* key was depressed. The depression of the up *B* key causes a mark on the repeater up sounder. If both repeater station *B* keys are assumed to be depressed the higher voltage is applied via the tongues of the *A* relays

to the lines, and therefore marks are made on the *B* sides at the up and down stations.

A leak circuit consisting of a polarized relay, tumbler switch and a resistance coil, is connected to each relay tongue for the observation of the outgoing signals.

By turning the switches of the double current keys to send, the keys substitute the tongues of the relays and quadruplex working to each station may be employed, the sounders of the leak circuits serving for the reception of the *A* side signals in each case. It will be observed that although the tongues of the relays are then separated from the *B* keys there are still positive and negative voltages connected to *S* and *M* in each case ; but these are only operative in actuating the *A* leak relays at the repeater office.

"A" Side Relayed Duplex. This arrangement provides a duplex circuit between the terminal stations as well as one between the repeating or intermediate station and one of the terminal stations ; whereas the split quadruplex repeater provides a duplex circuit to both terminal stations (Fig. 188).

The quadruplex apparatus at the terminal station is joined up as a down station and that at the repeating station as an up station. The duplex circuit is shown as an up line. The tongue of the *A* side relay at the repeating station, which moves in accordance with the terminal quadruplex *A* key, performs the functions of the single current key with switch, thus determining the direction of the current applied to the split of the duplex side relay, and hence the position of the relay tongue at the duplex station. The duplex relay tongue is controlled by the duplex station key and determines the direction of the current applied to the split of the non-polarized relay, and thus the position of the tongue of the *A* side relay at the quadruplex station. The *B* side is used between the repeater station and the quadruplex station precisely as in the case of the split quadruplex repeater. The leak circuits are also

arranged similarly save that a polarized sounder and condenser are used on the *A* side leak. By turning the switches of the double current keys at the repeater

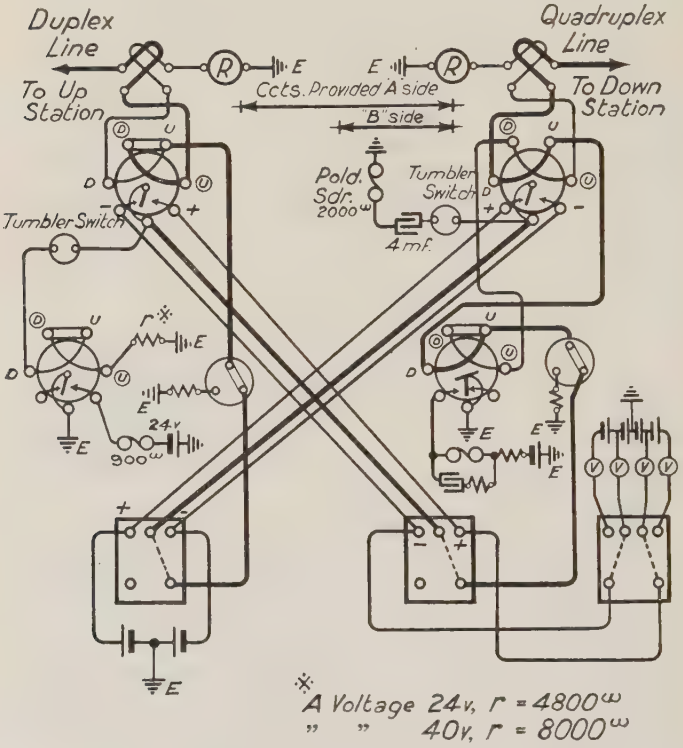

Fig. 188. Quadruplex *A* Side Relayed Duplex

station the circuits are separated into a down station duplex and an up station quadruplex.

If it is required to relay from a down station duplex to an up station terminal quadruplex, the line and compensation circuits are reversed on the duplex galvanometer as well as the battery connections between the 6 – terminal key and the quadruplex *A* key. The

quadruplex is dealt with similarly, line and compensation circuits are reversed and the direction of the current from the tongue of the relay on the duplex circuits is also reversed. The preferable method is, however, to use " universal connections " for both the quadruplex terminal station and the repeater station. The duplex side and station can be treated similarly. No difficulty will be experienced in making the necessary alterations to Fig. 188 if it is borne in mind that "universal connections " are the same as for an up station so far as battery polarity is concerned, and that the relay is connected to line and compensation circuits like a down station, i.e. the circle coils of the relays and left coil of the galvanometer are in the line circuit.

Forked Quadruplex. A duplex circuit can be provided between the terminal office and each of two offices over a single wire from the terminal office to the repeater office, and a wire thence to each of the two stations.

This involves relaying the *B* side as well as the *A* side at the repeater station. The terminal station uses an ordinary quadruplex, and the out-stations, duplex sets. The duplex line using the *A* side is connected after the fashion dealt with in previous quadruplex arrangements and calls for no further comment.

The local circuit of the *B* side relay (Fig. 189) is joined up to a standard relay with resistances and condensers as shown in order to avoid the *B* kick effect. The tongue of this relay follows the motions of the distant *B* key, and thus determines the direction of the current applied to the split of the relay in connection with line 2, and therefore the position of the tongue of the relay at line 2 out-station. The position of the key at out-station 2 determines the position of the tongue of line 2's relay at the repeater station. This determines the position of the tongues of the two relays, termed in this connection the incrementer relays, connected to its local circuit, and therefore determines whether 40^{v}

positive and negative, or 120^{v} positive and negative are supplied to the tongue of line 1's relay.

It will now be recognized that the tongue of line 1's relay performs the functions of an *A* key, and the tongue of line 2's relay those of a *B* key with respect to

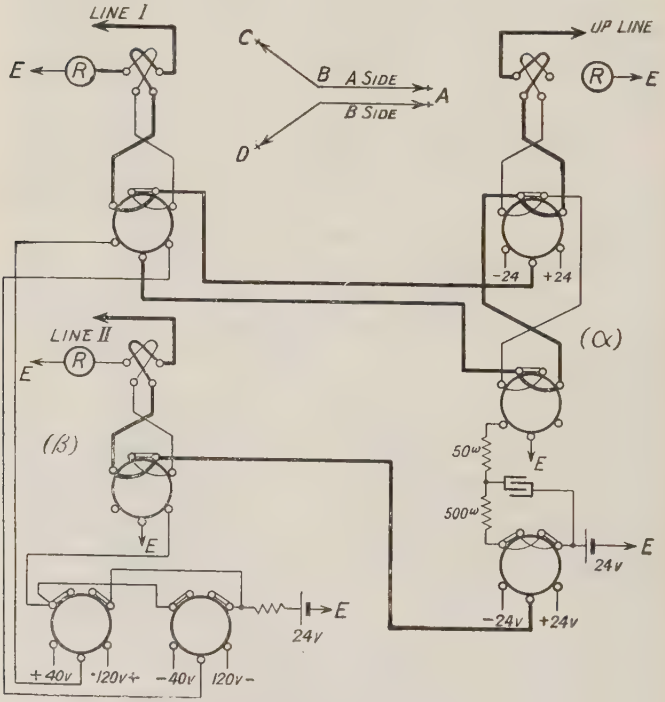

Fig. 189. Forked Quadruplex

the quadruplex worked wire. Also, that the *A* relay performs the functions of a double current key in connection with line 1, and that the *B* relay signals on to line 2.

"A" Side Relayed Simplex Central Battery. This arrangement (shown in skeleton in Fig. 190) provides a duplex between the terminal and the repeating office

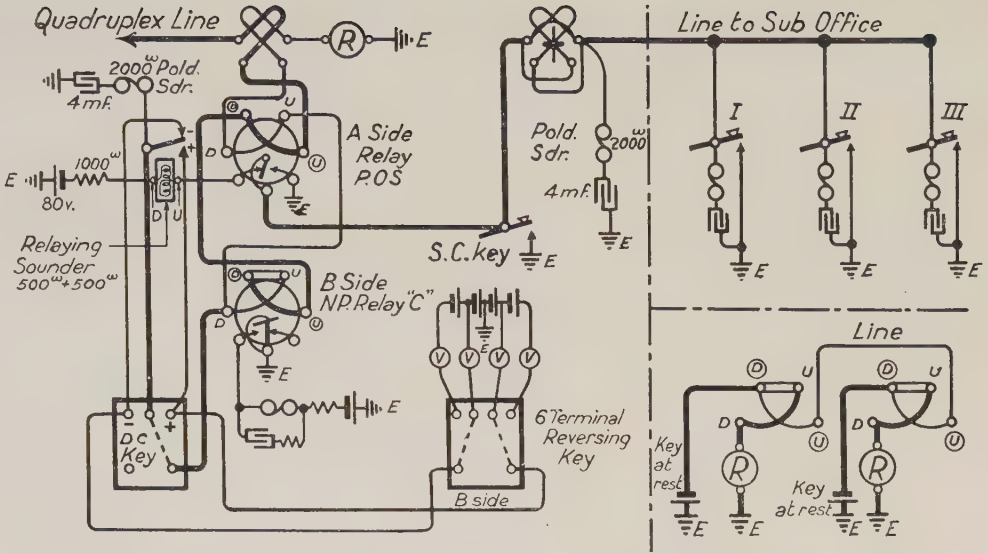

FIG. 190. QUADRUPLEX "A" SIDE RELAYED SIMPLEX

Skeleton universal duplex connections with keys at rest shown in lower right corner

and a central battery circuit between the terminal station and a central battery circuit radiating from the repeating station. The saving effected is one line wire between the terminal and the repeating office and the debit consists in the provision of additional apparatus at the terminal and repeating office.

The standard universal connections are employed (see page 326) in which the batteries on the quadruplex circuit are normally in opposition and both compensation circuits then space. The *B* side, with the usual local circuit is used as a duplex between the terminal and the repeating station, while the *A* side provides for the *CB* circuit; the set at the terminal station is, of course, an ordinary universal connection quadruplex set.

The tongue of the *A* side relay moves in accordance with the terminal *A* key, and in the marking position earths the central battery line, thus producing a mark at each of the out-stations. When an out-station signals by depressing his key the central battery line is earthed and the armature of the relaying sounder descends owing to the current flowing through its coils via the 1000^{ω} resistance coil. The position of this armature determines the direction of the current applied to the terminal station, and hence of the terminal *A* relay.

It need only be added that switches are provided to divide the circuit into a quadruplex circuit, and a separate central battery circuit terminating at the repeater station.

The relaying sounder is very similar to an ordinary Vyle polarized sounder but placed on its side. The armature lever is light, plays between two contact screws, and is mechanically balanced by a counterpoise fixed to the other end.

A relay with a polarized sounder and condenser in its local circuit is provided for observing the operation of the relaying sounder.

CHAPTER XI

CENTRAL BATTERY WORKING AND CONCENTRATORS

PART I—CENTRAL BATTERY WORKING

The Central Battery System, devised by C. J. Mercer, possesses all the advantages of closed circuit working without the waste of energy involved in the continuously flowing current during idle periods. Apart from leakage current due to the imperfect insulation of the line, current is only used when signals are being made, and this current is usually furnished by the secondary cell installation at the Head Office. The capital, and maintenance, costs of the batteries ordinarily required at out-stations are saved, and the apparatus employed is of the simplest possible description.

The arrangement of a three-station circuit is shown in Fig. 191, from which it will be seen that a negative E.M.F. of 80^{v} is applied to the line through a 1000^{ω} resistance coil, a single coil galvanometer with an engraved dial being inserted in the line chiefly with the object of indicating the insulation of the circuit. The 4 m.f. condensers placed in series with 2000^{ω} polarized sounders are charged by the central battery to a difference of potential of 80^{v} on a line of perfect insulation. On the depression of the key at, say, station I, the line is earthed and the condenser at each station discharges through its polarized sounder; that at the Head Office through its sounder, galvanometer, line, key at station I to earth; that at station I. through the front key contact; and that at station II through the sounder, key, and line, and through the key at station I to earth. In this way momentary currents due to the discharge of the condensers bring down the armatures of the neutrally-adjusted sounders, which therefore remain down until the key is released, when the

condensers are charged through the polarized sounders. This charging current is in the spacing direction and the armatures rise. The sounders are worked by the current impulses due to the charging and discharging of the condensers through the associated polarized sounders.

At the Head Office the sounder and condenser are sometimes connected to the back stop of the key, as shown in Fig. 191, in order that the sent signals may not be

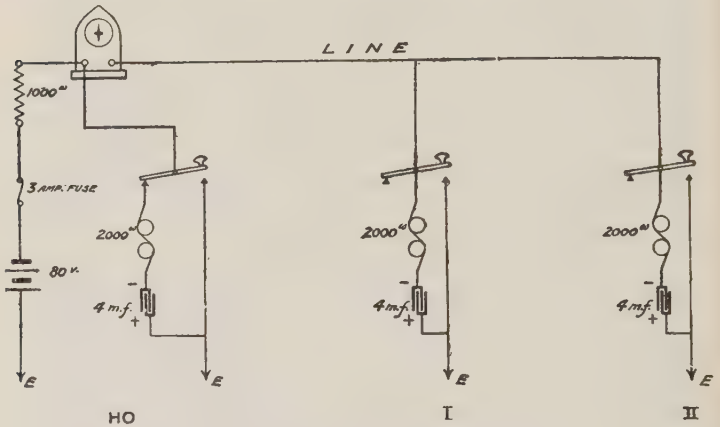

Fig. 191. C.B. Telegraph Circuit

recorded on the home sounder and thus reducing the noise in the instrument room. The arrangement is, however, objectionable, since it reduces the working efficiency of the circuit owing to the variations in the potential to which the Head Post Office condenser is charged in the three conditions, key at rest, in an intermediate position, and depressed. It will be appreciated that immediately the key lever leaves the back stop, there is a certain amount of condenser discharge by leakage. Hence, it is preferable wherever possible to join up the Head Post Office set similarly to the out-stations.

The earthing of the line causes the 80^{v} battery to

supply a current not exceeding 80 mA during the prevalence of a mark, and upon its termination a current of short duration flows until the condensers are recharged.

The most serious effect of low insulation is to reduce the difference of potential existing across the terminals of the condensers when the keys are at rest. This effect is felt most acutely at the Head Office, and it can readily be shown that the best value to be given to the feed resistance is equal to the geometric mean of the measured conductor and insulation resistances of the whole line.* As an illustration of the effect of low insulation the voltage applied across the condensers is only 54^{v} when the total insulation of a line (conductor resistance of 500^{ω}) is 2000^{ω} and that the depression of the out-station key will reduce this not to zero but to 28^{v}.

Experiment has shown that the 2000^{ω} polarized sounder has an advantage of nearly 100% over the 4500^{ω} sounders which were at first used on these circuits.

Head Office Set with Two Voltages. A special set for use with lines of low insulation is shown in Fig. 192. The Head Office by depressing his key changes the voltage from 80 negative to 80 positive and thus the

* "Central Battery Omnibus Telegraph Circuits," by H. H. Harrison in *Electrical Engineering* of 17th March, 1910—

Let x = feed resistance, R = insulation resistance, and r = conductor resistance. The P.D. at the Head Office, with keys at rest, $V_1 = \frac{R}{x + R}$. The P.D. at the Head Office, with out-station key down, $V_2 = \frac{r}{x + r}$.

$$V_1 - V_2 = \frac{R}{x + R} - \frac{r}{x + r} = \frac{Rx - rx}{x^2 + Rx + rx + Rr}$$

which is a maximum when $Rr = x^2$, i.e. when $x = \sqrt{Rr}$.

See also "The Theory of Central Battery Telegraphs," by R. Bradfield, *Proceedings of I.P.O.E.E.*, Part 36. Also, *P.O.E.E. Journal*, July, 1912.

effect produced upon the out-station sounders is twice as great as would be caused by the earthing of the line on an ordinary set. The standard relay, which is set neutral, is much more sensitive than a polarized sounder and, consequently, a greater working margin is obtained.

Central Battery Duplex. The first central battery duplex, described in the earlier editions of this work, was invented by Colonel Sir T. F. Purves as an adjunct to his metropolitan switching system. Since then many

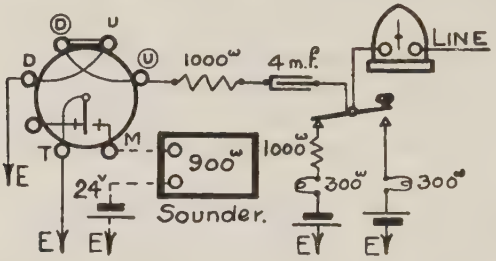

Fig. 192. Special C.B. Set for Head Office

arrangements have been devised, but it is necessary only to consider those now in general use.

The Hay Duplex. The arrangement devised by C. E. Hay* (Fig. 193) is a combination of the differential and bridge methods of duplex working. The 80v battery is connected to the junction of two 1000ω resistance coils which form the ratio arms of a bridge duplex, a standard relay and galvanometer being connected across them. The compensation circuit consists of a 1250ω coil and the resistance of the line is brought up to 350ω by adding a resistance coil of suitable value. At the out-station a 500ω + 500ω polarized sounder is joined in series with a 500ω resistance coil to earth

* "The Common Battery Duplex," by C. E. Hay in the *Post Office Electrical Engineers' Journal*, Vol. I, page 12. "The Theory and Development of Central Battery Telegraphs," by J. Fraser. Paper No. 25 read before the Institution of Post Office Electrical Engineers.

and a single current key is joined up so that on depression it short-circuits one coil of the polarized sounder and the 500$^{\omega}$ resistance coil, thus reducing the resistance of the circuit by 1000$^{\omega}$. The resistance of the line circuit is therefore 1850$^{\omega}$ with the key at rest and 850$^{\omega}$ when the key is depressed. In the normal condition a spacing current flows through the standard relay connected across the ratio coils, and this current is reversed when the out-station reduces the resistance to 850$^{\omega}$ by depressing his key. The polarized sounder

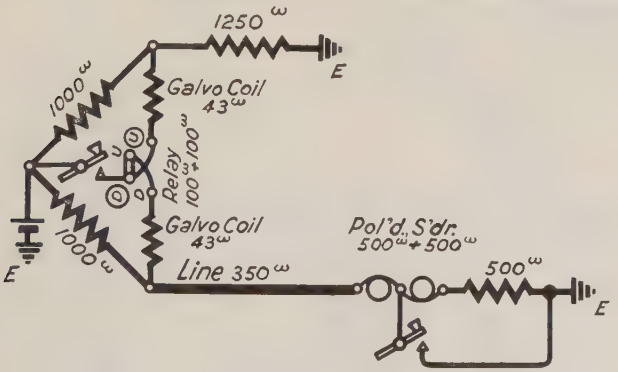

Fig. 193. Principle of Hay C.B. Duplex

at the out-station is joined up so that the current of 25 mA normally flowing through its coils almost neutralizes the polarizing effect of the permanent magnet. It may further be pointed out that when the current is increased to 50 mA by the depression of the out-station key the sounder is unaffected because this increased current circulates only through one coil of the relay—the magnetic effect on the armature being practically the same as before. Marks are made upon the out-station sounder by depressing the key at the Central Office. This places one coil of the relay and one coil of the galvanometer (143$^{\omega}$) in parallel with each ratio coil, thus reducing the resistance to 125$^{\omega}$.

The increase in the current flowing from 40 mA with the key at rest or to 80 mA with the key depressed, is sufficient to actuate the distant sounder in either position of its key. With both keys depressed the balance of current in the differential relay is upset and more current passes through the *UD* coil and line circuit (850ω) than through the *D*-circle *U*-circle coil and

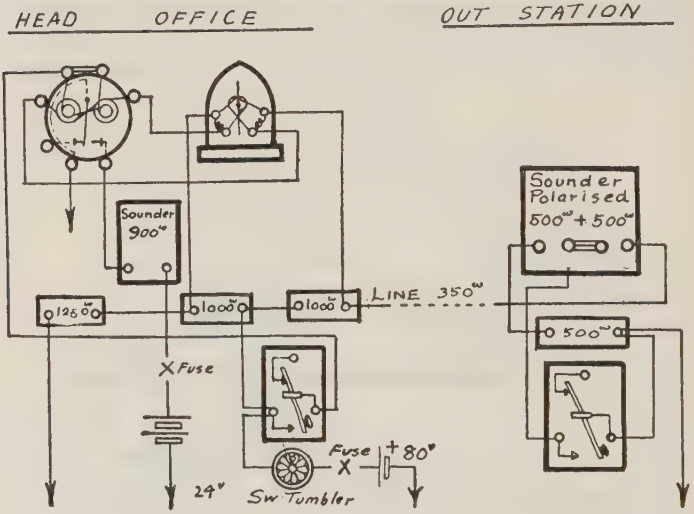

Fig. 194. Hay C.B. Duplex Full Connections

compensation circuit, thus producing a mark on the sounder joined in the local circuit.

The Hay duplex is used chiefly on short metropolitan circuits where the line is almost wholly underground and does not exceed 350ω in resistance.

The Vyle and Smart Duplex.* The duplex devised by C. C. Vyle and E. V. Smart is a double current

* "A central battery duplex system for long and short lines," by C. C. Vyle and E. V. Smart, *Post Office Electrical Engineers' Journal*, Vol. II, page 39. "The Theory and Development of Central Battery Telegraph Systems," by J. Fraser, before the Institution of Post Office Electrical Engineers, 8th March, 1909.

system which may be applied to lines of considerable length, whereas the sphere of the Hay duplex is limited to short lines of high insulation and inappreciable capacity.

At the Head Office (Fig. 195), the connections are those of an ordinary differential duplex, save that a non-polarized *C* relay with 500ω coils and a 6-terminal

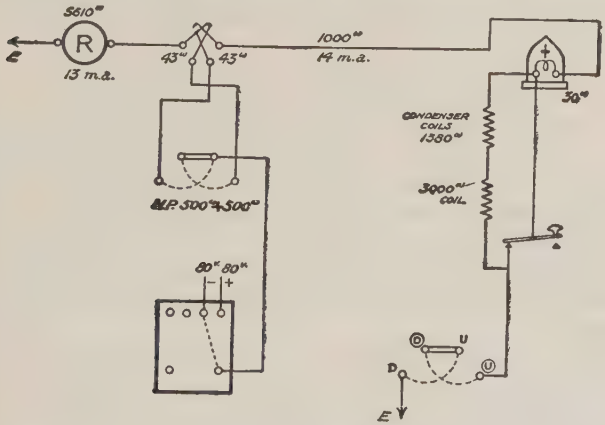

Fig. 195. Vyle and Smart C.B. Duplex. Principle

reversing key are employed. A galvanometer and polarized relay are joined in series at the out-station, and the function of the key is to increase the resistance of the circuit when depressed. In this condition, the rheostat contains sufficient resistance to balance the circuit. The marks at the out-station depend on the direction of the current, and this is determined by the position of the Head Office key. The Head Office marks when the current in the line circuit is reduced by the depression of the out-station key, thus allowing the spring of the non-polarized relay to close the local circuit. When both keys are down, the reduction in the line current marks at the Head Office and its direction is such as to mark at the out-station.

The balance and working conditions are obtained as follows—

1. With the out-station key at rest the Head Office inserts resistance in the rheostat to produce a deflection of 55° on his galvanometer (a preponderance of 32 mA).

2. The out-station holds down his key and the Head Office tells him to insert resistance until the needle at the Head Office is vertical, thus indicating the resistance balance.

3. The capacity balance is obtained in the usual manner, the out-station key being still depressed.

4. The spring of the relay is given sufficient tension to cause the tongue to mark with the out-station key depressed. The correct tension is the mean between that required to make the tongue neutral (a) with the distant key up and (b) with the distant key down.

It is upon the care with which this last adjustment is made that the success or failure of the working depends.

The rheostat, condenser and retardation coils may be given fixed values on short circuits with little open work and the necessity for operation (3) avoided.

With a line having a resistance of 100^{ω}, the normal current flowing in the line circuit is—

$$\frac{80}{543 + 1000 + 230} = 45 \text{ mA}.$$

To obtain a preponderating line current of 32 mA the compensation current must be 13 mA and the resistance 6153^{ω}, i.e. 5610^{ω} is required in the rheostat. When the out-station key is depressed a balance exists and both line and compensation currents are 13 mA. The tension on the spring should be equal to the pull of 16 mA on one coil of the relay. The current at the out-station varies between 13 and 45 mA, but there no difficulty is experienced.

Connections. The full connections are shown in Fig. 196. A 9-terminal 2-position switch is used at the

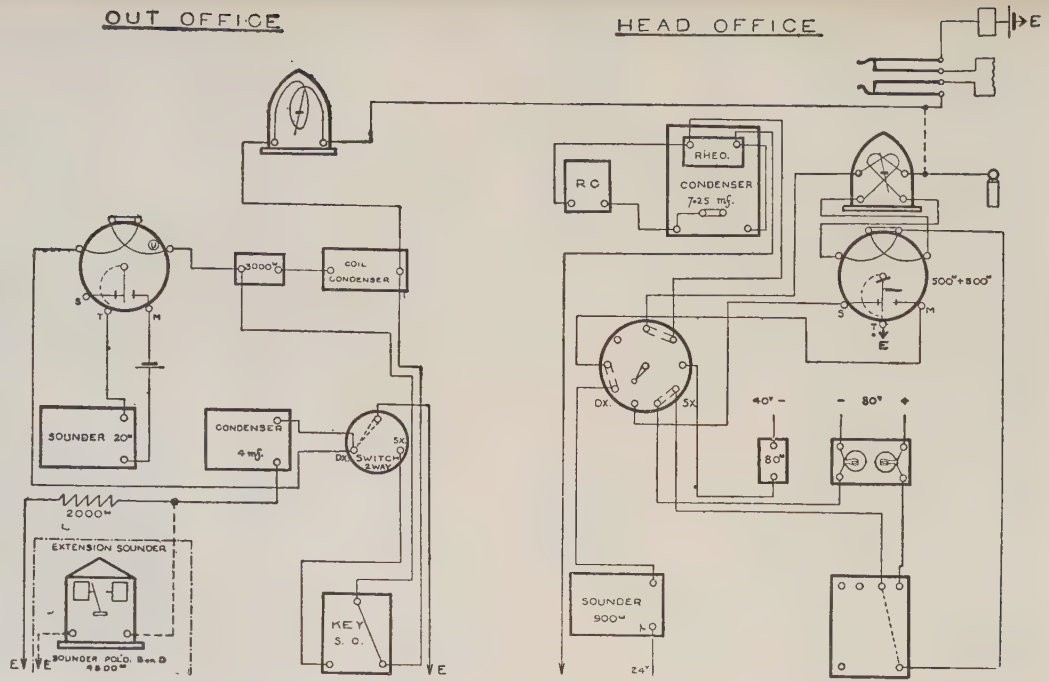

FIG. 196. VYLE AND SMART DUPLEX. FULL CONNECTIONS

Head Office to change to simplex working whilst a two-way switch and condenser serve a similar purpose at the out-station. When turned to simplex the conditions of Fig. 197 result, and it will be observed that an extension sounder may be provided when it is required that call signals shall also be given in another room away from the set. When this facility is not necessary a 2000^{ω} resistance coil replaces the sounder. The relay at the out-station is adjusted to neutrality, and its tongue therefore follows the movements of the

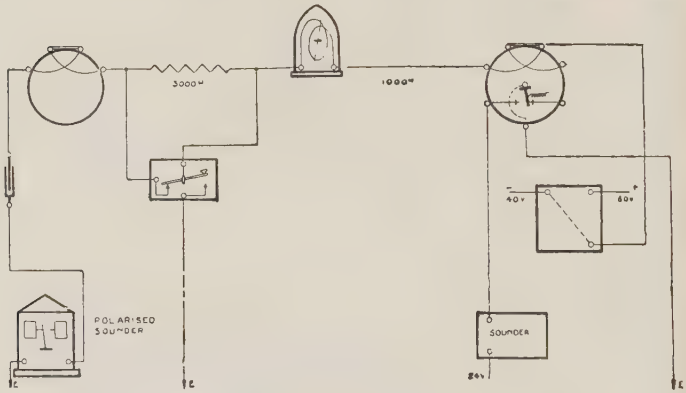

Fig. 197. Skeleton Connections at Simplex

Head Office key. The depression of the out-station key earths the line and so completes the circuit of the 40v battery through the left-hand coil of the non-polarized relay, thus producing a mark. When connected to a concentrator the plug and jack replace the dotted connection shown in the figure.

For short and underground circuits the standard relay at the out-station is replaced by a polarized sounder $100^{\omega} + 100^{\omega}$ (Fig. 198). The use of this arrangement on circuits over 40 miles in length is unsatisfactory since the volume of the received signals varies appreciably even though the normal current

flows through only one coil and the reduced current through both in series.

Wheatstone Working. Transmitters and receivers may be added at the out-stations and Wheatstone working adopted by connecting the circuit to a duplex set at the Head Office. During times of emergency this facility is of remarkable value and the distance over

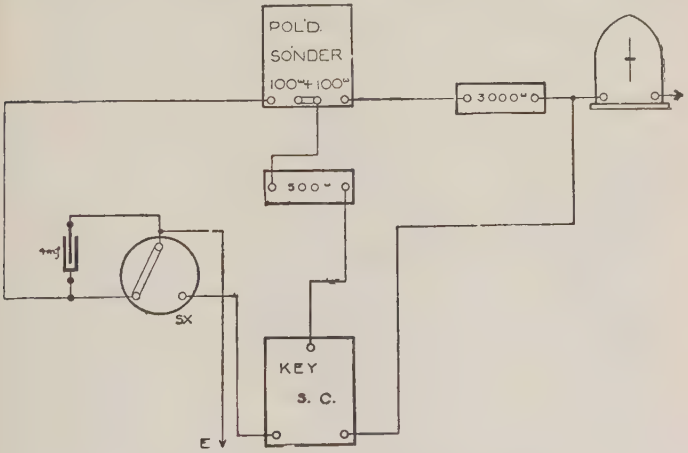

FIG. 198. VYLE AND SMART C.B. DUPLEX FOR SHORT LINES

which such working can be arranged is considerable—in fact, a circuit 364 miles in length has so been worked.*

The Head Office duplex set is shown in skeleton (Fig. 199). It may be a special set joined up as shown in Chapters XII or XVII, but if an up station the batteries, and if a down station the relay or receiver connections, must be reversed. A resistance of 8000ω is inserted in the rheostat, 4 m.f. in the condenser, and 500ω in the retardation coil to commence with. The circuit is then balanced with the out-station's key depressed,

* *Journal of P.O.E.E.*, Vol. III, p. 44.

but if there are two or more stations the mean value is taken and twice this amount is inserted in the rheostat. This produces a definite spacing effect by the compensation circuit. The transmitter is joined up so that the line is earthed when the divided lever rests on the marking side. This upsets the balance at the Head Office, the preponderating marking current in the line circuit being approximately equal to the previous compensation spacing current, and a mark is

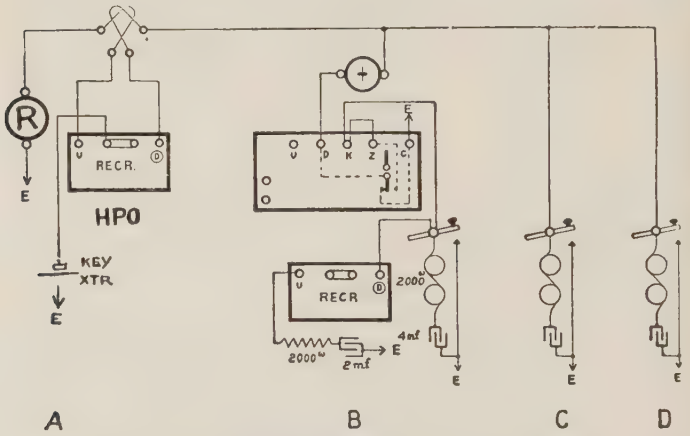

Fig. 199. Wheatstone Added to C.B. Circuit

thereby recorded. A receiver may be added at any station by joining it in leak with a 2000$^{\omega}$ resistance coil and 2 m.f. condenser to the centre of the key. The receiver and sounder are worked by the discharge of their condensers direct to earth in the ordinary way when any of the out-stations send either by transmitter or key, but when the Head Office sends by reversing his battery the impulse is greater since the condensers discharge and charge in the reverse direction.

A transmitter and receiver are shown at *B* (Fig. 199), but transmitters or receivers or both may be added at any or all of the out-stations and Wheatstone

working adopted between any or all of the stations, e.g. by adding a receiver at *D*, *B* may work Wheatstone to *D*.

PART II—THE CONCENTRATOR

In order to effect economy in Head Office staff, space, and apparatus, all minor circuits are usually joined to a concentrator, each circuit being connected to a relay (operating a lamp) and switch-spring or "jack." A number of working sets of apparatus, generally less than the number of circuits, each terminate in a plug, and any working set can thus be connected to any circuit on the switch. Movement of the out-station's key lights the lamp and the switch clerk connects a disengaged set to the line. The lamp is again lighted on completion of the message by the operator at the working set depressing a special clearing key thus advising the switch clerk when to sever the connection. Messages to be sent to the various offices are dealt with similarly, the switch clerk passing the message to a disengaged operator, at the same time making the necessary connection.

There are two methods by which the cost of the switching clerk's services can be saved. The first is by automatic apparatus which distributes the calls to the working sets and which also connects up any desired circuit to a working set at the will of the operator. This plan is described briefly later, but its application has been very limited. The second method is termed ancillary concentrator working and consists in the provision of switchboards within the reach of the operators who make their own connections. When a station calls, it is the duty of a particular operator to answer the call, but if engaged, other operators in a definite rotation may answer it. In order to provide this condition the call lights lamps placed in front of several operators. This method introduces the principle of team working where each operator's efforts are

directed to the traffic as a whole rather than to any particular circuit on the switchboard.

Auxiliary Apparatus. The jacks employed are of the five-point and eight-point types. The former consists of four springs and a body or foundation which carries the tube forming the entrance for the plug. The four springs fit into straight slots made in two ebonite washers, held together to the body by a screw. The

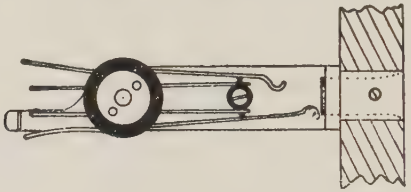

Fig. 200. Five-point Jack

circular brass tube fits into the foundation strip of ebonite, to which it is secured by a screw. The general arrangement is indicated in Fig. 200, while Fig. 201 indicates the conditions which obtain when a plug is

Fig. 201. Plug Inserted in a Jack

inserted. The body of the plug is not used in the system under consideration, and merely serves the mechanical purpose of holding the plug in position. The eight-point jack used as the "Time" jack (Fig. 204) has three more springs than the five-point jack. The central spring normally makes contact with the lower one, but when a plug is inserted it is lifted away from the lower and makes contact with the upper spring.

The plug is electrically divided into two sections, the ball or tip forming one, and the body the other part. The plug cover is of ebonite or fibre and insulates the part which is handled by the switch clerk, so as to

avoid the possibility of electric shocks. The cord contains two conductors each of which is made up of twenty-four tinsel threads laid up in three groups of eight threads, each thread consisting of a tough copper or bronze ribbon, about 12 mils wide by ·8 mil thick, spiralled to about 50 turns per inch over a mercerized cotton thread of about 10 mils diameter. The completed conductor is about 60 mils diameter and has resistance of ·3ω per yard. The cores are then covered with cotton lappings and an external braiding of glazed cotton completes the cord. The various improvements

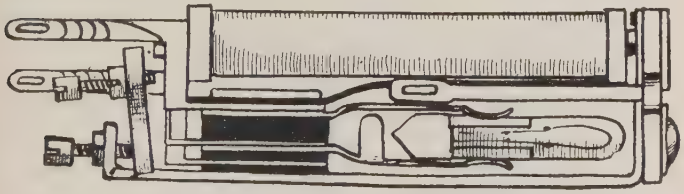

Fig. 202. Jack, Lamp, and Relay
(Type 100 A)

in the design of cords have for their object the prevention of faults at the junction of the plug and cord, where the bending is sharpest and most frequent.

The line relay, lamp jack, and lamp are combined in a single unit which is of the type used in the smaller C.B. telephone exchanges. The lower edge of the soft iron armature rests against the soft iron extension of the right-hand core of the electro-magnet. The armature normally rests upon the lower adjustable screw, and when attracted its proximity to the core is determined by the upper contact screw. The armature when attracted connects the 40^{v} battery to the lamp which lights up, thus giving a very conspicuous signal. The carbon filament is connected to two brass plates fixed on the sides of the lamp, thus serving to connect it to the two springs of the lamp jack placed beneath the relay coil. The mounting plate bears a circular hole in

front of the lamp in which is fixed a lamp cap consisting of a brass socket with a plano-convex opal lens.

Suitable tools have been designed for the removal of the lamp cap and extraction of the lamp when it is necessary to replace either a broken lamp cap or a faulty lamp.

Special tools are also provided for adjusting the relay and in no circumstances should adjustment be attempted without their use. In adjusting a relay by means of the tools, the lock nut of the screw contact should be engaged by the spanner (tool instrument No. 79) and the latter should be turned to

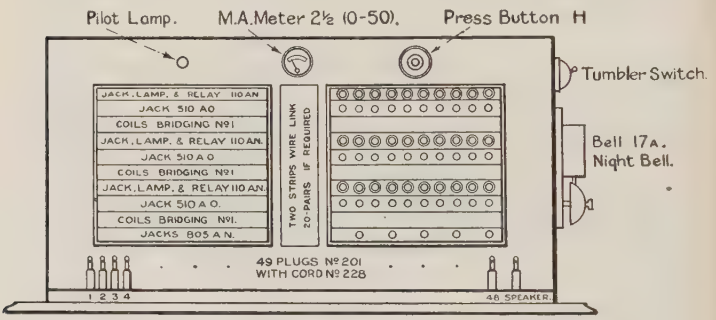

Fig. 203. General Arrangement of Concentrator Switchboard

loosen the nut. The special screw-driver (tool instrument No. 94) should then be inserted through the tubular spanner, and when the necessary adjustment of the screw has been made, the lock nut should be tightened up by means of the spanner, the screw being held by the screw-driver to prevent it from shifting. It is important that the spanner, which is provided with an insulated end, should be kept in position during the whole operation in order to avoid short-circuiting the battery and consequent blowing of fuses.

Concentrator Switchboard. The general arrangement of a 60-line concentrator is shown in Fig. 203, where each strip contains ten relay and lamp units, beneath which are placed the ten corresponding line jacks, and beneath these, mounted inside the frame, are the bridging coils. The other details of the apparatus will

be apparent after consideration of the circuit arrangements.

Central Battery Circuits. The apparatus at the out-stations is as shown in Fig. 191, as no change is required when the circuits are connected to the concentrator. Turning now to Fig. 204, it will be observed that the negative 40^{v} battery lead, taken from a fuse in the case is applied via the inner contacts (in parallel) of the " time " jack, 100^{ω} line relay to the long spring of the circuit jack, where, normally (i.e. when there is no working set plug inserted), it passes through a resistance coil to the short spring connected to line. When the out-station signals by depressing his key, he earths the line thus completing the circuit of the line relay and causing its armature to be pulled up, with the result that the top side of the lamp is earthed through the third and second springs of the " time " jack and pilot relay. The resistance (a bridging coil) connected between the inner springs of the line jack is of such a value as to raise the resistance of the line circuit to roughly 1000^{ω}* and so to reduce the value of the current which flows when the out-station calls. The 1^{ω} pilot relay, joined in the earth connection from the relay armature, is energized when any lamp lights, and its local contacts remain closed so long as there is a single lamp on the switch glowing. The pilot lamp associated with this relay is placed in a conspicuous position on the switch, *vide* Fig. 203. Its function is to facilitate supervision since attention can readily be focussed upon it. If the pilot lamp glows continuously it indicates at once that calling and clearing signals are not being attended to promptly.

The calling lamp having been lighted by the depression of the out-station's key, the switch clerk takes the plug connected to a disengaged working set and

* For lines under 100^{ω}, its resistance is 1000^{ω} ; 100^{ω} to 350^{ω}, r is 750^{ω} ; 350^{ω} to 600^{ω}, r is 500^{ω} ; 600^{ω} to 850^{ω}, r is 250^{ω} ; over 850^{ω} the inner springs are short-circuited.

plugs in on the associated jack. The line is thereby connected via the short spring of the jack and the tip of the plug to a working set. The 80^{v} negative lead (Fig. 204) is connected through 1000$^{\omega}$ feed resistance to the lower left terminal of a key *SC* with switch,

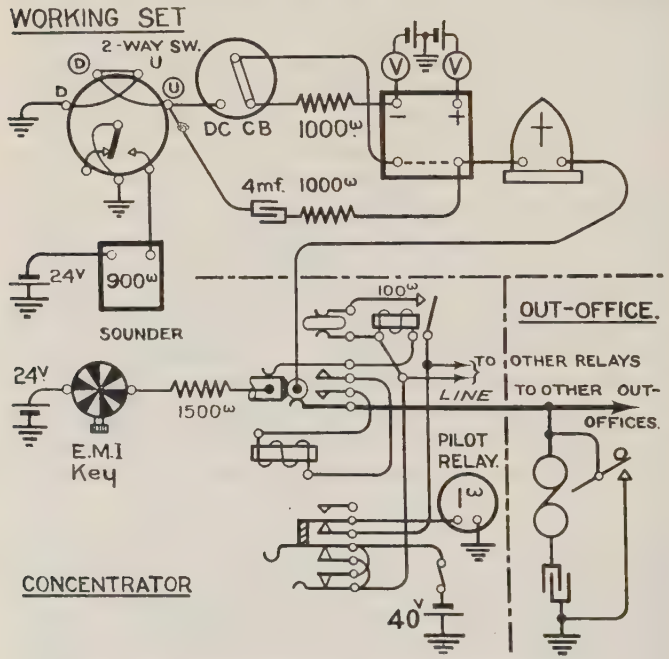

Fig 204. Arrangement of C.B. Concentrator

and thence across the key via the galvanometer and tip of the plug to the out-office circuit. Instead of the polarized sounder a 4 m.f. condenser, 1000$^{\omega}$ resistance coil and standard relay with a local sounder circuit are employed for reception, and the Head Office hears his own signals on this sounder. These details are, however, described later.

On completion of the message the operator depresses

the button of the indicator Key *I* which pushes over the armature to the earth-connected contact screw. The 24^{v} positive joins with the 40^{v} negative battery through the closed contacts of the indicator key, 1500$^{\omega}$ resistance coil. sleeve of plug, long spring, and line relay; (on C.B. circuits, the line relay is biased against a maximum leakage current of 30 mA and operates with a calling current of 36 mA). This current (*a*) holds the armature of the indicator key to the cores, and (*b*) lights the line lamp and pilot relay. The switch clerk then removes the plug, thus breaking the circuit

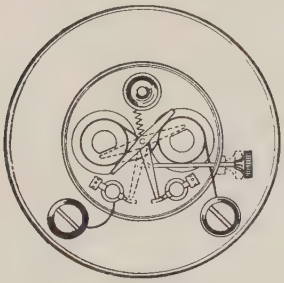

Fig. 205. Indicator Key

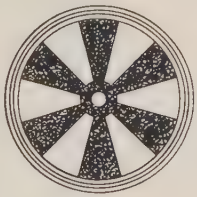

Fig. 206. Top of Key

and so permitting the armatures of the line relay and indicator key to fall back.

The Indicator Key. This key, which was originally designed by Colonel Sir T. F. Purves for his Metropolitan Intercommunication System, has been depicted diagrammatically; actually it consists of two small electro-magnets and armatures (Fig. 205) arranged as in a non-polarized relay *C*, but with a disc divided into twelve parts alternately black and white (Fig. 206) attached to its axle. Beneath the glass top of the case is placed a blackened disc with six spaces cut so that normally the black sectors of the key disc lie beneath them. When the tongue, which has a wide space between the normal and marking contacts, is

pushed over by the button at the side, the key disc rotates and the white parts show through the slots in the upper disc. Hence, the white sectors are displayed until the switch clerk clears the circuit.

Time Jack. Time is signalled by connecting working sets to the jacks marked " Time," one time jack being provided for each horizontal row of ten circuits. The depression of the Head Office key connects the 80^{v} positive to the short spring of the " time " jack and the condensers of the ten out-station circuits discharge

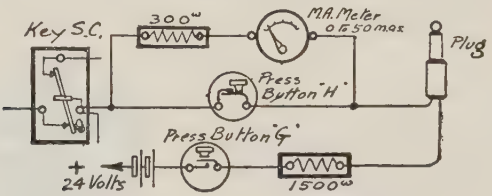

Fig. 207. Testing Apparatus Added to Speaker Set

and are charged in the reverse direction, via the line relays and a mark results.

Testing Apparatus. A speaker set is allotted to the switch clerk and is similar to that shown in Fig. 204, but it is provided with a milliampere meter reading from 0 to 50 mA fitted on the switch-board, and is brought into circuit by depressing the press button *H* (Fig. 207). The insulation and conductor resistance of any circuit are readily obtained by dividing the voltage applied (80^{v}) by the current observed when the circuit is connected with the out-station key respectively at rest or depressed. The resistance is

$$\frac{80{,}000}{\text{current in mA}} - 1600.$$

The press button *G* which takes the place of the indicator key is used for testing the operation of the line relay.

WORKING SETS

C.B. only. When all the circuits on the concentrator are very short and all of them are C.B. circuits, the working sets may consist of a S.C. key, polarized sounder, and a condenser joined up like the out-stations. In exceptional cases a 1000$^{\omega}$ feed resistance and a 40^{v} primary battery may be adequate. With longer and more difficult circuits on the concentrator, the working sets employ the principle of Fig. 192 with a standard relay and positive and negative voltages for sending.

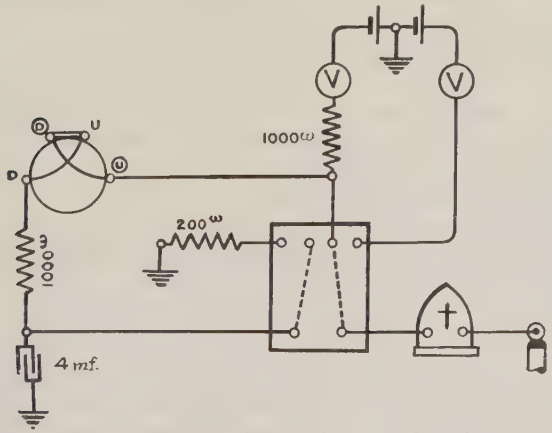

FIG. 208. HEAD OFFICE SIGNALS CUT OFF

The connections are then as shown in Fig. 204 with the two-way switch omitted.

It has already been stated that it is undesirable to prevent the reception of the sending signals on the Head Post Office set, but where from traffic considerations this is imperative, Fig. 208 is followed. The condenser is discharged through a 200$^{\omega}$ resistance when the key is depressed, and in this way all possibility of " kicks " on the sounder by partial condenser discharge due to leakage is avoided.

The working limits of the various arrangements are

determined by the conditions of the most difficult circuit connected to the concentrator. Any circuit exceeding the limits laid down must be worked by ordinary D.C.S. (*Vide* table on page 369.)

C.B. and D.C.S. There are many cases where it is required to connect both C.B. and D.C.S. circuits to the same concentrator and it is, therefore, necessary that all the working sets may be used indiscriminately for either type of circuit.

Universal Connections. The standard method of joining up all D.C. circuits which have no intermediate station is by universal connections.*

The working sets and the D.C. out-stations are all connected similarly as universal sets in which positive is connected to line to mark. As compared with an ordinary D.C. up-station the change consists solely in reversing the relay. The D.C. connections shown in Fig. 204 fulfil this condition.

On fairly short lines, the presence of the 1000$^{\omega}$ feed resistance in the negative lead is not serious, but the

* Unfortunately, there are two distinct types of "universal connections": (i) the original plan devised by Colonel Booth in 1901 and applied to all Baudot continental circuits and to repeaters generally, in which negative is used for marking and consequently the *D* coil of the relay is connected to line, and (ii) the universal connections used on concentrators and circuits connected thereto. In this case, positive is used for marking as on ordinary D.C. and quadruplex sets, and consequently the *U*-circle coil of the relay is connected to line.

In both cases duplex circuits are worked by the opposition instead of by the combination method.

The battery polarity was chosen by Col. Booth (in consultation with the Continental authorities) to impose less strain on the old submarine cables. At the time when the decision had to be made for C.B. circuits, there were very many circuits with long lengths of G.P. cable in tunnels subject to varying degrees of moisture and temperature, which would inevitably fail under the continuous application of an 80^{v} battery. Then too at every point of leakage the copper conductor is eroded by a positive voltage. Hence it was decided to treat the concentrator circuits as a separate case. These difficulties no longer apply and doubtless when leak working is ultimately adopted the concentrator circuits may be brought into line with the rest of the world and the term "universal connections" will be more nearly true.

marking and spacing currents are thereby made unequal. Hence, the two-way switch is added to eliminate this inequality by modifying the set to ordinary universal D.C. connections when trouble is experienced in working long and difficult D.C. circuits.

Key 87B. When some of the D.C. circuits have intermediate stations, a key 87B is added to each set to make the working set an up, a down, or a universal set at will. This necessity will continue so long as intermediate stations are connected in series on the line, but will disappear when leak working is generally adopted. The TS-BM-MR-LV YQ circuit is worked on this plan (*vide* page 430). It has also been adopted on all the Creed Wheatstone newspaper circuits throughout the kingdom.

The key 87B has three positions. In the central position " universal " (Fig. 209) the negative and positive voltages are respectively connected to Z and C of the key by the right-hand set of springs, the line and earth are respectively connected to U-circle and D of the relay. When the key is moved to " Up " the battery is reversed, while at " Down " the relay is reversed.

Home Signals Cut Out. When it is required to cut out the sending signals on sets working both to D.C. and C.B. stations, a similar plan to that shown in Fig. 208 is adopted.

A 6-terminal key is substituted for the S.C. key with switch and this discharges the condenser through a 200^{ω} resistance. The send and receive switch consists of a 6-terminal 2-position switch. There is, moreover, a tumbler switch for short-circuiting the 1000^{ω} feed resistance in the battery lead.

Absorbing Resistances. Since the standard voltage on the Head Office working sets is 80^{v}, it is necessary to insert a resistance coil on most circuits in order to reduce the current to 15 mA. This coil is placed in series with the out-station's relay (between the key

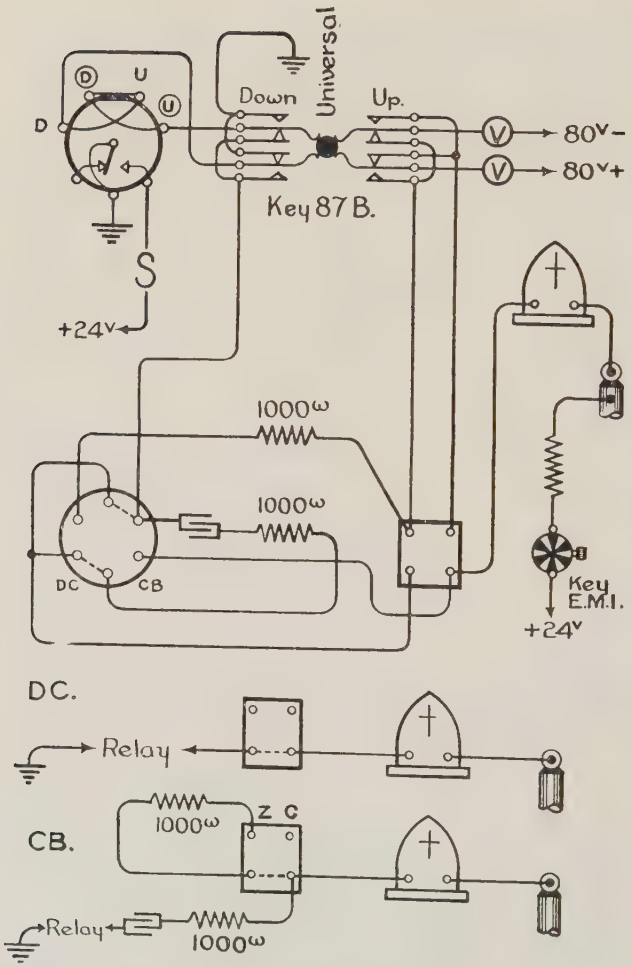

FIG. 209. USE OF KEY 87B FOR UP, DOWN, OR UNIVERSAL CONNECTIONS

and the relay) instead of in the line in order to avoid the necessity to increase the out-station's power.

It should be added that quadruplex circuits when the switch is turned to simplex are identical with ordinary D.C. sets and may be concentrated in the same way.

Use of Two Keys 87B. When the working sets are required to work to up, down, or universal station sets, some of which have little working margin, the connections shown in Fig. 210 are adopted. The upper key 87B provides for reversing the battery and relay, while the lower one provides the best possible working conditions respectively for D.C. and C.B. circuits.

Fig. 210 with its skeleton diagrams is self-explanatory.

Working limits of lines on concentrator switchboards C.B., and combined C.B. and D.C. circuits (80^{v} secondary cells and 1000^{ω} feed). —

Receiving Apparatus	Key voltage	H.O. signals when sending	Mileage limits of aerial line.
Polarized sounder 2000^{ω}	80	Received	$150\sqrt{r}$
Relay standard B .	80	,,	$223\sqrt{r}$
Polarized sounder .	80 + 80	,,	$200\sqrt{r}$
Relay standard B .	80 + 80	,,	$316\sqrt{r}$
,, ,, .	80 + 80	Cut off	$200\sqrt{r}$
Polarized sounder 2000^{ω}	80 + 80	,,	$150\sqrt{r}$

Notes.—

1. r = conductor resistance per mile of line.

2. The calling relay circuit is subject to the limitation of 40^{v} at 15 mA, but this can be extended for D.C. circuits by a fine adjustment of the relay. For C.B. circuits the relay calling circuit limits the line resistance to a maximum of 1000^{ω}.

3. The limitations in the fourth column of the table take into account certain factors associated with sets of apparatus (at the H.O. concentrator) in use successively on circuits

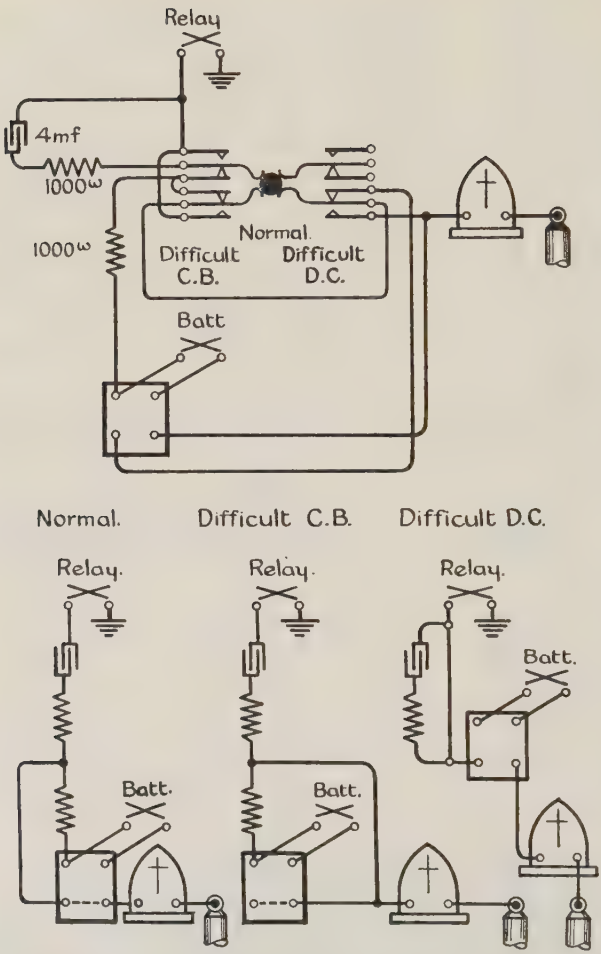

FIG. 210. USE OF TWO KEYS 87B FOR DIFFICULT CIRCUITS

varying from the shortest to the longest lines connected with any one switchboard.

Transfer Circuits. When there are several concentrators it is often convenient to have a means of transferring circuits from one board to another so that the

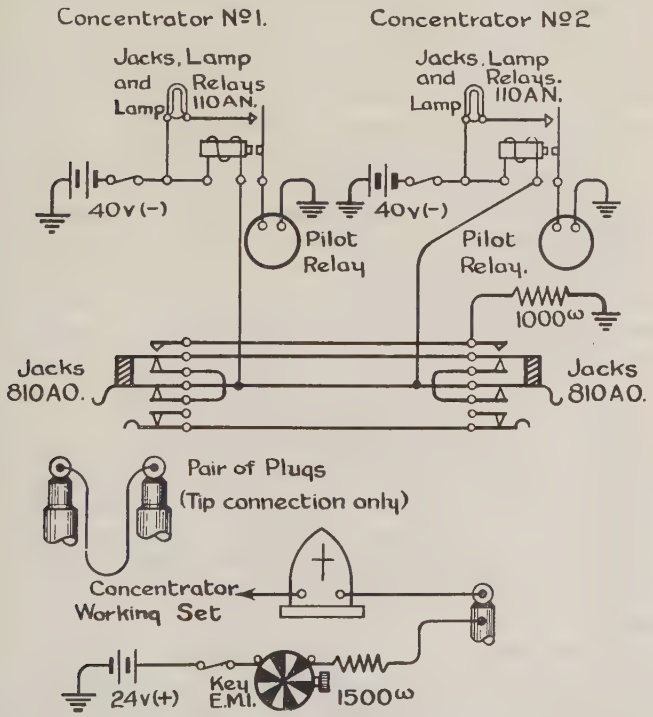

Fig. 211. Transfer Circuits

working sets of the latter may be utilized. Three time jacks only are required on each strip and this leaves two jacks on each panel available for transfers. The circuits between the concentrators are connected up as shown in Fig. 211. A calling circuit on No. 1

concentrator is connected by a special pair of plugs and cords to the transfer circuit. The tips of the plugs connect the line via the short spring to the short or line spring on the second concentrator. The insertion of the plug raises the centre spring from its lower to its upper spring which lights both lamps. The path of the current is from both 40^{v} – battery leads through both relays to the wire joining the two long line-springs, through the contacts of No. 2 concentrator jack, along the wire joining the centre springs, centre and upper springs at No. 1 concentrator to the 1000^{ω} earth at No. 2 concentrator. The insertion of a working set plug at No. 2 concentrator disconnects this earth, which breaks both relay circuits and the lamps go out. When the working set plug is withdrawn, both lamps light and remain so until the plug is withdrawn from the transfer jack at No. 1 concentrator when the same voltage is applied to each end of the signalling wires.

ANCILLARY CONCENTRATORS

The ancillary concentrator is now the standard system for all new installations. The No. 1 type has a capacity up to 30 lines with 16 working sets. When this figure is exceeded additional installations are necessary. For example, in the C.T.O., there are three such concentrators catering for 90 lines with 48 working sets.

In brief, the system consists in placing every circuit connected to the concentrator within the reach of every working set. This necessarily involves the provision at each connecting point of an indication to show when each circuit is connected to a working set. Hence, each circuit at each panel has two lamps and a line jack, the line lamp to indicate calls and the engaged lamp to show that the circuit is engaged or free as the case may be.

The concentrator consists of eight panels each placed

between and within the reach of two telegraphists. On each panel every circuit to the maximum number of thirty is represented by an eight-point line jack, line lamp, and an engaged lamp, the latter serving to show that the circuit is disengaged (dark) or engaged (lighted).

Fig. 212 shows the connections of the last panel, an intermediate, and the first, or home, panel. The other intermediate panels are connected in series precisely as the connections between the last and intermediate panel in the figure. The line is connected to the short spring of the last panel jack and passes through its inner spring to the intermediate panel jack and so n series until it reaches the home line jack where it passes through the bridging coil, line relay, and " time " jack to the 40^{v} negative.

When the out-station earths the line, the line re'ay armature is pulled up and this completes the circuit of the 6D relay (40^{v} negative through the long and inner springs of the line jacks of the last and intermediate panels, lower and middle signalling springs of the home jack, coils of 6D relay, contacts of the line relay and signalling springs of the time jack to earth). The 6D relay pulls up its armature and the two central contact springs descend with it and make contact with the lower springs. The left springs apply the 40^{v} negative (through the 6D relay coils) to the tongue of the line relay which is earthed at the time jack. This forms a retaining circuit so that the 6D relay remains operated when the tongue of the line relay falls back due to the release of the out-station calling key. The right-hand springs of 6D earth all the line lamps through the pilot relay and thus the calling station lights its lamp on every panel.

The insertion of a plug in any one of the calling circuit jacks breaks the connections between the long and short springs and the inner contacts. This cuts off the power supply to the 6D relay and, consequently,

darkens the ine lamps. But the insertion of the plug has earthed all the engaged lamps which, therefore,

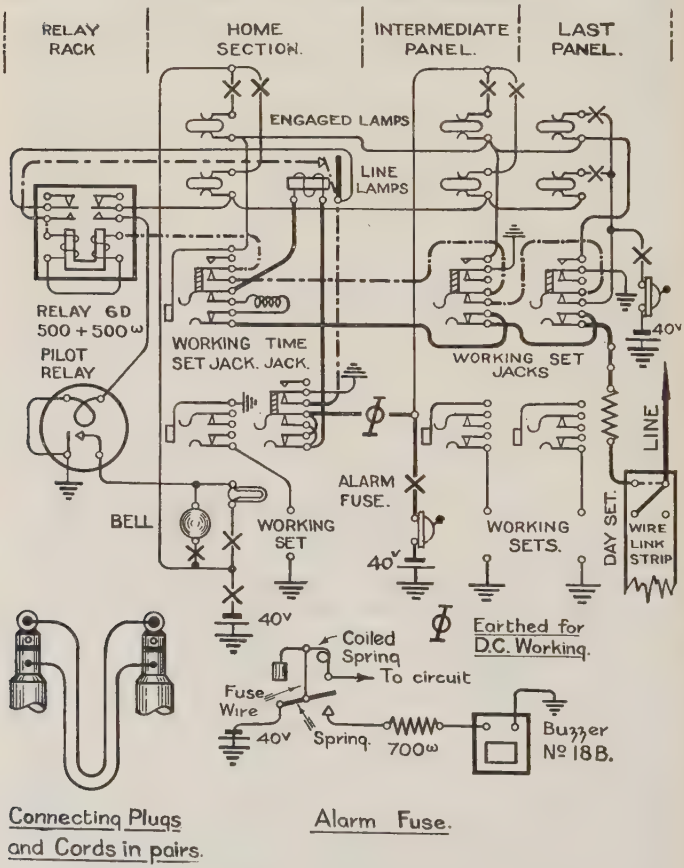

Fig. 212. Princ ple of Ancillary Working

glow, and so indicate to each operator that this circuit is engaged.

When time is to be signalled, the insertion of a plug in the common time jack cuts away the earth from

the armature of the line relay and so prevents the line lamp from glowing when the time signals pass through the line relay.

It remains only to explain that, instead of connecting the working sets directly to a plug, they are terminated on a five-point jack from which connections are made to a calling line (or a line to be called) by means of a pair of plugs connected by a cord. Three-point plugs are used, but the ring sections are not connected. The advantage of this arrangement consists in the fact that a faulty pair of plugs and cords can instantly be changed.

At the home position the body of the eight-point jack has to be used because the long spring and its inner spring are required in connection with the line circuit.

Automatic Concentrator.* The object of this arrangement is to dispense with the switchboard clerk identified with manual concentrators. H. H. Harrison's Patent Specification† provides not merely for ordinary concentrator working, which comprehends the association of out-stations on the one hand with head office sets on the other, but for through switching from any one out-station to any other. Apart from the Central Telegraph Office, London, there was no other area in this country where it was economical to instal apparatus for through switching, which includes the use of selectors and a certain measure of complication.

* Owing to considerations of space, it is impracticable to describe the various relays and switches in this work. The reader who has no knowledge of automatic telephony and desires to pursue the subject may be advised to read *Automatic Telephony*, by H. H. Harrison, chaps. I and II, or *Automatic Telephony Simplified*, by C. W. Brown, chaps. I to IV.

† Patent No. 5655 of 1912. Application 6th March, 1912; accepted 7th April, 1913. Improvements in or relating to Telegraph Systems: H. H. Harrison, G. W. Moore and J. Savin. Object: the establishment of communication between telegraph offices automatically through central station switches without the intervention of a switch operator. Further object: to effect the concentration of a number of telegraph lines on a switch at the central offices for the purpose of automatically distributing incoming traffic amongst the operating sets of the central station. The two systems intercommunication and concentration can be used in combination.

The British Post Office has experimented in a small way with the automatic concentrator pure and simple, developed by Capt. J. B. Laidlaw of the Engineer-in-Chief's staff. The arrangement was ultimately tried on public circuits, and use is made of the Automatic Telephone Manufacturing Co.'s pre-selector and its associated line relay and cut-off relay, the A.T.M. action being retained in principle. That action for a C.B. circuit may be briefly described as follows: The out-station depresses the S.C. key to earth the circuit of the line relay. The line relay has a retaining connection and in the operated position closes a portion of the circuit of the pre-selector driving magnet. If the pre-selector happens to be lying on an engaged position the driving magnet circuit obtains a connection to " earth " at bank No. 1. Searching proceeds until an idle position is found, that is, one without an engaged or guarding earth. In the absence of such an earth, the driving magnet circuit is, at this stage, completed through the 1300 ohm cut-off relay. The current is now, of course, too weak for driving. The cut-off relay operates to make the changes, most of which are peculiar to the telegraph requirements, as follows—

(*a*) The line is transferred from the line relay to the idle set.

(*b*) A guarding earth is placed on the appropriate Bank 1 contacts.

(*c*) The cut-off relay finds a new earth through Bank No. 4 at the sounder set.

(*d*) An indicator operated by a relay in the cut-off relay circuit indicates at the sounder set to the operator that a line is joined to his set.

(*e*) The appropriate line lamp at the switchboard (switch key and lamp case) glows.

When the line is clear the operator at the sounder set disconnects the cut-off relay circuit momentarily and all reverts to normal.

This disconnection is effected by throwing a two-way switch placed in the cut-off relay circuit. It only exists during the throw-over period, a matter of six or seven milli-seconds.

It has been stated above that an out-station causes the line to be joined to a set by earthing, in effect, the line relay. The same result can be obtained at the head office by the momentary depression of a plunger key.

The foregoing comprehends all the essentials of the system, but in practice several adjuncts are required to make it commercially acceptable. These are detailed on Figures 213 and 214 which should be read in conjunction with the following: Associated with each sounder set is a supervisor's key for the purpose of closing the set, by placing an earth on the No. 1 or " a " bank multiple.

The plunger key employed at the Head Office for connecting its line to a set serves another purpose. If it be depressed when the line is through to a set a lamp identified with that set glows. Bank " b " multiple is used to make the connection.

The relay which forms part of the earth lead for cut-off relay, not only actuates the indicator at the sounder set, but in conjunction with the other similar relays, is employed to make up a chain-circuit which formerly was used for giving an audible or visual indication that all the open sets were engaged. Incidentally, in this connection, it will be observed that the actuation of a supervisor's key for a given set completes the chain in respect of that set. The necessity for this is obvious.

The chain-circuit is now used to form a connecting link between the concentrator system proper—just described—and a call-storing system. The principle of the storing will be understood from the following: The pre-selectors in any given concentrator equipment are arranged to have a number of bank contacts over and above those required to accommodate the sounder sets. In the experimental set already referred to, for instance, the number of sets connected was about 14, while the bank contacts numbered 25. In the ordinary way the eleven spare contacts on the No. 1 or " a " level would be permanently earthed in order that the wipers would be driven over them. What actually has been done is to treat specially the last five contacts of the eleven, that is, numbers 21 to 25 inclusive. It is arranged that when all the open sounder sets are engaged and accordingly when the chain-circuit is complete, the earth is removed from bank contact No. 25. The result is that a calling line will come to rest on this position. The effect of this is to open the second storing position (contact 24). On this being occupied the third position is opened and so on up to five. The details will be gathered from the diagram, which shows also a method of giving preference in emergency to an intermediate stored call.

It will be seen from the diagram that a busy back signal is given to out-stations whose lines are in store. The four pre-selectors *PS* 1-4 are required for timing the release of stored lines so that everything proceeds in turn. In a standard arrangement there is no reason why slow acting relays should not take the place of these pre-selectors.

Partial Concentration. It is convenient at most large offices to concentrate the work at night and on Sunday, and for this purpose one, or, if required, two 20-pair

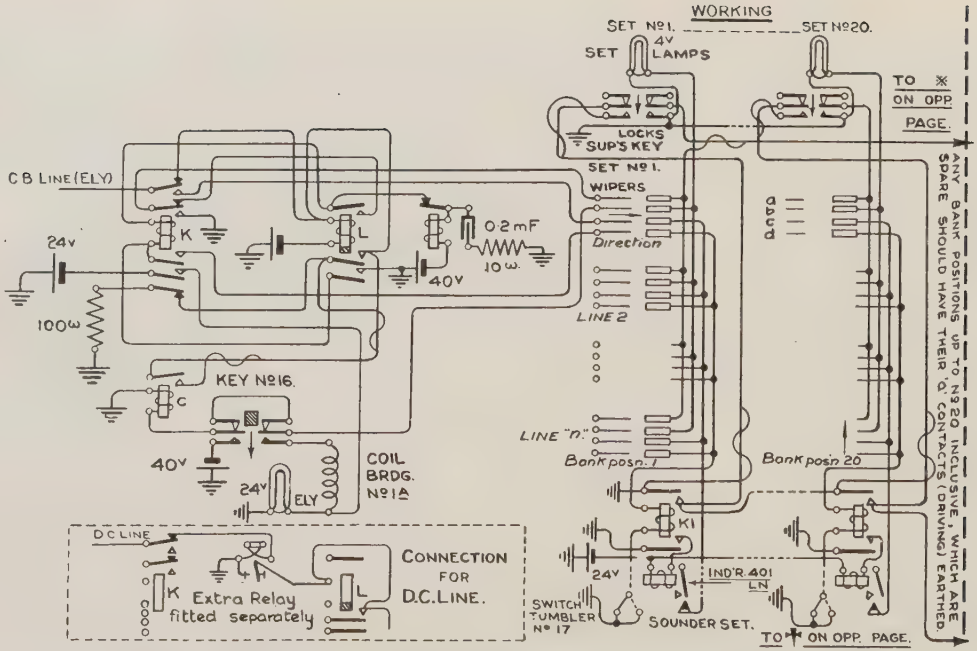

FIG. 213. AUTOMATIC CONCENTRATOR—LINES AND WORKING SETS

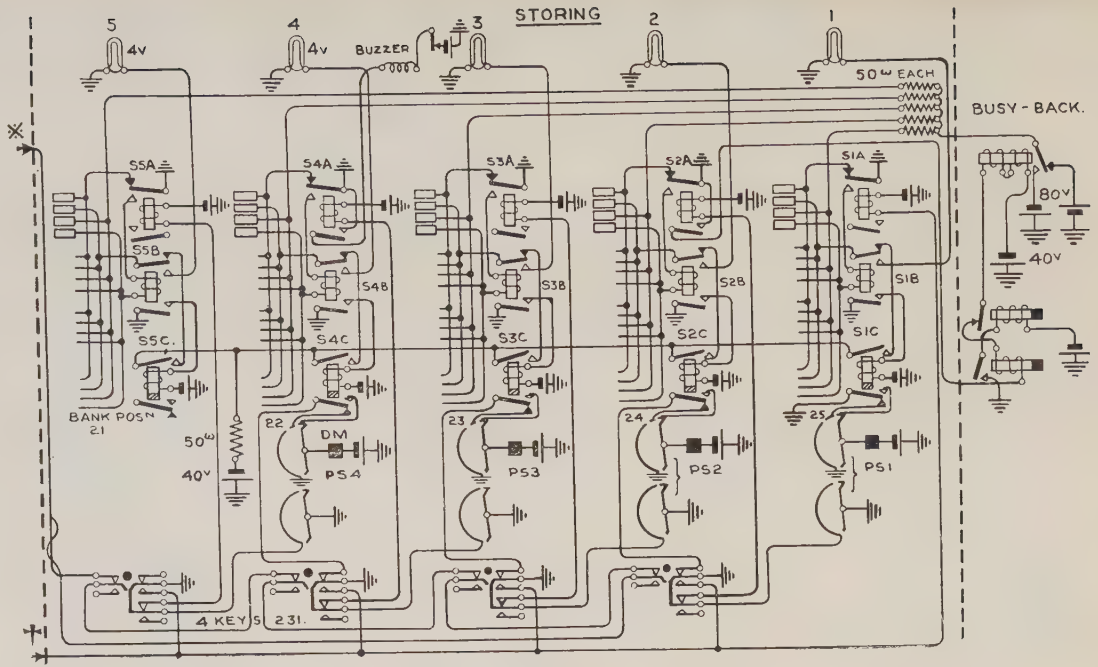

FIG. 214. STORING FACILITIES

wire link strips are placed in the centre of the concentrator.

The line is connected to the lower left test hole which is joined to the upper right test hole. A wire link placed vertically as shown by the dotted line (Fig. 215) connects the line to its allotted position on the concentrator. By removing the wire link and placing it between *B* and *D*

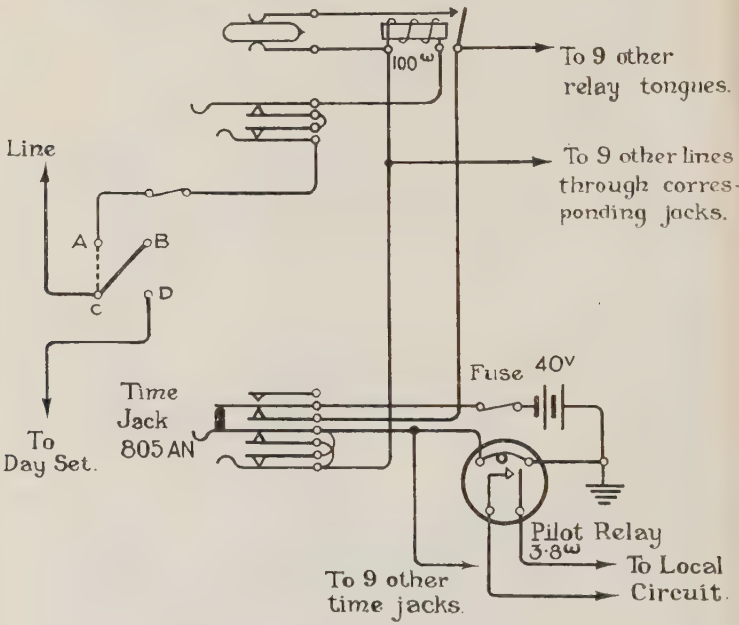

Fig. 215. Partial Concentration

the concentrator apparatus is cut out and the line joined direct to its normal day set.

If the circuit thus concentrated is, during the day, worked with a voltage less than that used on the working sets, viz. 80v, a suitable resistance coil is inserted at the point indicated by the two small circles between the line jack and *A* on the concentrator.

In this connection, it should be appreciated that

any circuit whether duplex, quadruplex or Wheatstone becomes to all intents and purposes an ordinary D.C. circuit when the switch is turned to simplex. Absorbing resistances are added at the out-stations in the path of the received current at simplex.

Telegraph Switching Systems. A detailed description of the London Metropolitan intercommunication system designed by Colonel Sir T. F. Purves was given in the earlier editions of this work. In this system central battery worked sounder circuits to offices in the London area were connected to each other to avoid retransmission or to working sets by operators at the switchboard to which they were connected. After being in use for about 24 years, the system was recently dismantled owing to the dwindling of inter-office traffic which had resulted from the great expansion of the telephone system in London.

Many experiments in switching to save re-transmission of messages were made in the early days of telegraphs and all of them were abandoned. But, it is by no means impossible that in the future some form of switching may be adopted after the fashion suggested by Donald Murray.* It may be added that H. H. Harrison† patented a system for the replacement of the intercommunication switchboards by an automatic switching system.

At the present stage it is desired merely to mention them as possible lines of development. With the advent of start-stop teleprinters and composited and voice frequency telegraphs worked in telephone cables, the position may need reconsideration. The principles of automatic telephone switching may possibly be applied to telegraphs.

* *Speeding up the Telegraphs : A Forecast of the New Telegraphy*, by Donald Murray, *I.E.E. Journal*, Vol. 63, p. 245.

† Patent No. 5655 of 1912.

CHAPTER XII

HIGH SPEED AUTOMATIC SYSTEMS

GENERAL

The generic term "automatic system" is usually employed to denote all the systems in which the signals are transmitted by mechanical means as opposed to those in which the signals are sent by a manually operated key. Most circuits can be worked by a machine transmitter at a much greater speed than a telegraphist can operate a key. Moreover, the speed is constantly maintained and the marks are more accurately formed than is possible by hand.

The Wheatstone apparatus comprises three separate and distinct parts. Firstly, the perforator, which is employed to prepare the tape (or "slip" as it is termed) controlling the signals sent out. Secondly, the transmitter, which sends out signals in accordance with the perforations of the slip. Thirdly, the receiver which is a very sensitive form of polarized direct writer. A galvanometer, sounder, line and local batteries are also required.

The objection to all automatic systems lies in the fact that a key clerk is required at each end to feed the transmitter and divide up the slip from the receiver. Unless the operations of preparing the tape at the sending end and writing up or preparing the messages at the receiving end are more rapid than ordinary manual sending and receiving, then, given ample lines, a manual system is to be preferred. But modern additions to the Wheatstone system have tended very largely to effect the staff economies suggested. In the first place, perforators operated by a keyboard similar to a typewriter enable an operator to perforate the tape for fifty to sixty ordinary commercial messages

per hour, and as many as 100 messages have been dealt with in the hour.

The Wheatstone is still extensively used for Press work, and presents very definite advantages where the same text or body of news has to be sent to several towns. Then, too, in emergency where there are insufficient lines available and a glut of work is involved Wheatstone working possesses unique advantages. Special events can very readily be dealt with as the apparatus is easy to transport and little time is required for installation.

The series of inventions by F. G. Creed has materially increased the utility of the Wheatstone system. In the first place, the Wheatstone receiver has been replaced by the Creed Receiving Perforator, which produces at the receiving end a perforated slip identical with the perforated transmitting slip. This slip may be passed through transmitters, and thus used automatically to retransmit the messages without transcription, or the slip may be passed through a Creed printer which automatically typewrites the message on a slip which is gummed on to the form for delivery.

The Siemens automatic system employs keyboard perforators but uses the 5-unit code. The perforated slip is passed through the transmitter working at a speed of 106 words per minute, and the message is typed on a slip at the receiving end. A perforated slip similar to the transmitting slip can also be produced if desired by a comparatively simple attachment to the keyboard perforator. The system is very extensively employed in Germany and in some other continental services, but in this country only to the extent of four Anglo-continental circuits. The apparatus is robust, well constructed and gives very little trouble. The working is reliable and the 5-unit code has a considerable advantage over the Wheatstone system on circuits where the speed approaches the limit of the working speed of the line, as, for example, on submarine cables of moderate length.

PART I. THE WHEATSTONE AUTOMATIC SYSTEM

The Wheatstone Perforator. The perforator is mounted upon a wooden stand provided with a drawer for receiving the punched out paper. Behind this is placed the box containing the roll of slip, and the second lid is

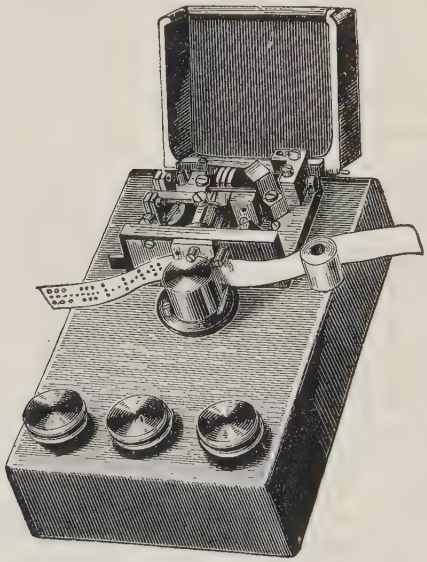

Fig. 216. Wheatstone Perforator

raised to form a stand for the message or manuscript to be punched.

The keys of the perforator are operated with iron punching handles, the ends of which are recessed to receive the striking cushions of solid rubber. Two slips may be simultaneously perforated, and therefore double wound rolls of paper are also provided.

The perforator (Fig. 216), which is purely mechanical in its action, consists of five steel punches operated in suitable combination by the three keys, the slip being

automatically moved forward to the required extent immediately the key is released. The slip is from ·46 to ·48 inch wide, from 4 to 4½ mils in thickness, and is treated with olive oil in order to ensure cleanly perforated holes.

Operation of the Punches. The five punches occupy the relative positions shown by the plain circles vertically under R_2 and R_3 in Fig. 217, and have been marked 1 to 5. Punches 2 and 4 are of smaller size than the other three and serve to form the central

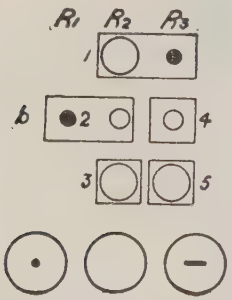

FIG. 217. ARRANGEMENT OF PUNCHES

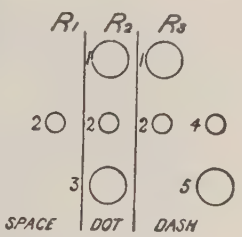

FIG. 218. PERFORATIONS FOR SPACE, DOT AND DASH

guiding holes. The middle key operates punch 2 only. This punch is attached to a small plate, and the extension of the middle key, upon depression, strikes the pin *b*, so forcing the punch through the slip, thus perforating a centre hole as shown under R_1 (Fig. 218). The left or dot key depresses punches 1, 2, and 3, and perforates as at R_2. The right key operates punch 1 by means of the extension plate and pin, 4 and 5 directly, whilst 2 is operated from 4. Punch 2 can be operated independently of 4, but when 4 is struck 2 moves with it. The perforations resulting from depression of the dash key are shown at R_3.

Punches. The punch which was designed by J. W. Willmot, has a hollow recess at its end, and therefore has no centre on

which a deposit of oil from the slip can take place. As the annular surface of the punch remains flat a clean perforation is ensured. Moreover, in coming into contact with the slip, a small amount of air is compressed in the recesses of the punches, which, after the perforations have been made, tends to blow away the punched-out portions of the paper, and also to prevent any oil or foreign matter accumulating in the recesses

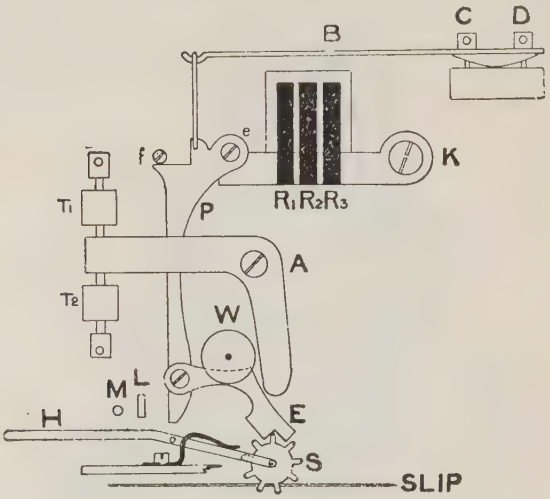

Fig. 219. Part of Perforator Mechanism

of the punches. The holes in the front plate through which the perforations are expelled are chamfered, thus facilitating that process.

Paper-feeding Device. The device for feeding the paper forward either one or two spaces as required may be seen in Fig. 219. The lever K, which has its axis upon the right, fits into notches cut in the underside of the levers R_1, R_2 and R_3, and is articulated with the crank P at e. Near the end of P is fixed a double-toothed pawl E engaging with the star wheel S. The drum-shaped wheel W is carried upon a light spring and holds the pawl in its normal position. The levers K and P are normally held in the positions shown in

the figure by the action of the powerful spring B, the tension upon which may be adjusted by the screws C and D.

When the centre key is depressed punch 2, actuated by R_1, passes through the slip and the levers P and K move forward (downward in the figure), thus carrying the pawl E to the left.

Immediately the key is released the spring B returns the levers to their normal positions and the pawl

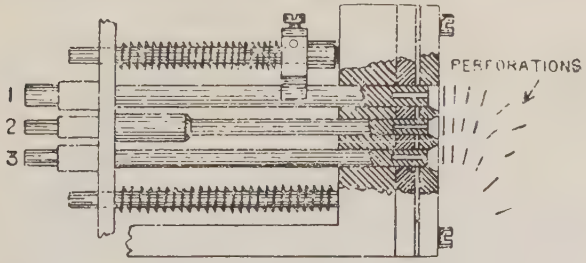

FIG. 220. PERFORATOR PUNCHES

engages a tooth of the star wheel, thus moving it forward and bringing the paper into position for the next perforation. A similar result occurs when the left key is depressed and the paper is again moved forward by the requisite amount. The distance to which the front end of the lever P can be moved to the left is limited by the end of the lever L, but when the right key is depressed this stop is raised and P moves further to the left to M, with the result that the star wheel is moved round two teeth, as is obviously necessary. The lever L curves over the pawl and is pivoted upon the right. It is directly connected beyond the pivot to the lower side of the "dash" lever beneath the perforator base.

A consideration of Fig. 220, showing a vertical section through punches 1, 2 and 3, taken in conjunction with Figs. 217 and 219, will render the arrangement of the punches quite evident. The two spiral springs serve to

return the punches (shown depressed) to their normal positions immediately the key is released. The ends of R_1, R_2, and R_3 are of sufficient depth to operate the three rows of punches.

The star wheel S is carried by the lever H which serves to withdraw it when inserting the slip between

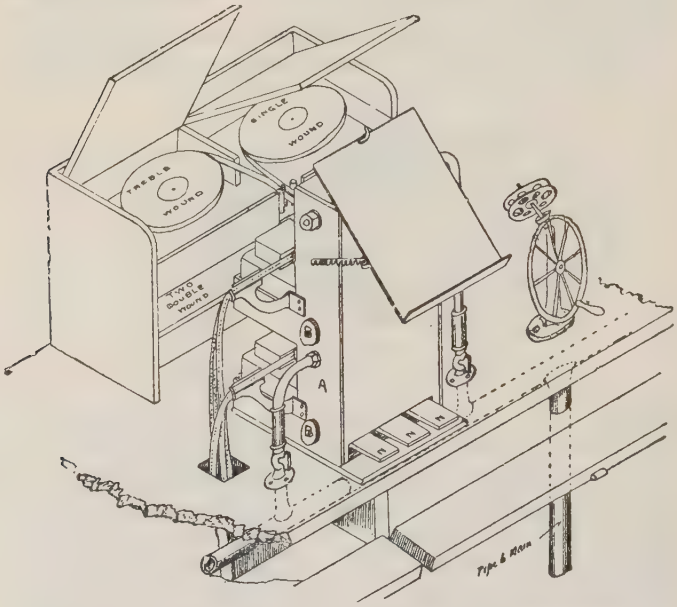

Fig. 221. Appearance of a Pneumatic Perforator

the plates. The centre key is struck and the slip pulled gently forward until the star wheel engages with the centre holes.

Perforator Adjustment. The adjustment of the perforator is a matter of considerable importance, and the bent lever A, with its adjusting screws T_1 and T_2, is provided for this purpose. The lower extremity limits the distance at which the pawl engages the star wheel, and therefore the distance through which it is turned. The standard is 120 central perforations per foot, the distance being measured from the centre of the

first to the centre of the 121st perforation. If the word "telegraph" is punched three times with the double spaces between the words the requisite number (121) is obtained between the first and last holes. Ten feet of slip is reckoned as 50 words, hence, if this length of slip passes through a transmitter in 15 seconds, the speed is 200 words per minute, which corresponds to 80 complete cycles per second. Another rule for measuring the speed consists in passing slip containing ABC's with double spacings between the letters. The speed in words per minute is the number of groups of ABC's sent or received in 50 seconds.

Pneumatic Perforators. In certain very large offices pneumatic perforators are employed. In this way from one to eight slips can be simultaneously prepared. Four rolls of paper, one treble, one single and two double wound are provided, as indicated in Fig. 221. The two perforators are actuated by the three keys which are to be seen in the forefront of the figure. These keys operate valves (Fig. 222) which admit the compressed air, obtained from the pneumatic tube plant, into the piston chambers. Each perforator has an independent supply of air, and either or both may be worked at will. The sizes of the pistons are of course dimensioned so that the dot and dash keys which operate respectively three and four punches receive a heavier blow than the space key which operates only one punch.

The Kotyra Perforator. The type chiefly used by the Post Office is termed the Perforator No. 21. It is provided with three piano keys which on depression complete the circuits of three electro-magnets, the armatures of which operate a modified form of Wheatstone perforator. Considerable power is required, and this is usually provided from the city's power supply, 100^{v} to 120^{v} being required. Sparking is suppressed by three small condensers.

A Kotyra Keyboard Perforator has also been designed. In this machine when a key is depressed, the rack corresponding to that particular key is

selected and engages with a revolving pinion, causing it to be drawn smartly over the raised contacts in its path, touching each one in succession and completing the electrical circuits of the solenoids resulting in a dot, space or dash, being punched on the slip for each contact passed over.

The pinion is fitted with a three-speed pulley wheel which suitably provides for regulation of the speed of

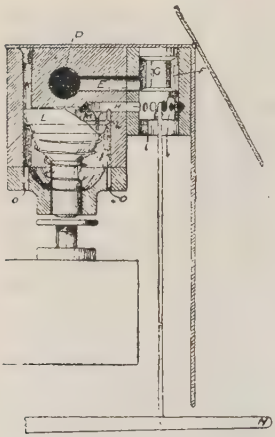

Fig. 222. Pneumatic Perforator Valve and Piston

Fig. 223. View of Pneumatic Perforator with Front Plate Removed

working independently of the rate at which the motor is running.

Kleinschmidt Keyboard Perforator.* The Keyboard (Fig. 224). This is arranged in the usual manner with the extra telegraphic signs added, there being, in all, 41 keys and a space bar. A combination key is provided by means of which any two keys in the keyboard

* Abstracted from H. H. Harrison's paper, "The Story of the Keyboard Perforator," read before the London centre of the Institution of Post Office Electrical Engineers, on 8th January, 1917.

may be connected to form one character. One solenoid controls both the perforation, and feeding forward, of the tape.

The method adopted for the selection of the punches to be operated to form a character is illustrated in

FIG. 224. KLEINSCHMIDT KEYBOARD PERFORATOR

Fig. 225. Each character key lever *KL* is immediately over an intermediate notched lever *IL*.

Underneath each intermediate lever runs a number of tee levers suspended by a system of parallel links *L*. Only two of such levers and links are shown in Fig. 226, their numbers corresponding to the number of punches in the gang. The punch controllers are attached to horizontal levers which are let into small slots in the side of the vertical portion of each tee lever *TL*. When the tee levers are depressed the punch controllers *PC*

are raised and interposed between a punch hammer and the punch heads. The side elevation given in Fig. 226 makes this clear.

The work of selecting the punches is performed by the depression of the key, whereas in some perforators

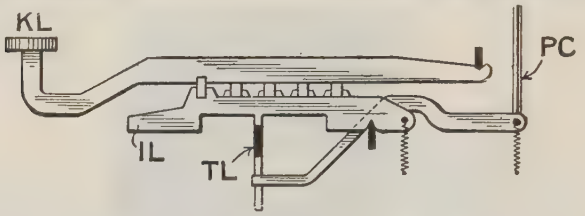

Fig. 225. Selection of Punches

the work to be done by the finger is merely to originate the work of selection.

The Variable Feed Device. This is of a very ingenious character. In any letter or character the

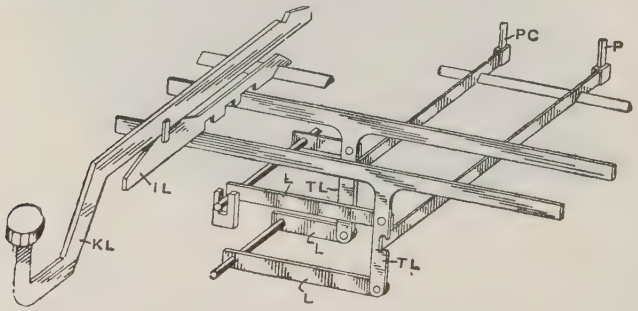

Fig. 226. Selection of Punches

last hole to be punched is in the bottom row and lugs are placed on the punch controllers to secure the correct feed. The stop on the last lower line punch operated determines the feed, but as the device works from the right hand end of the punch gang, its movement will be smaller the longer the letter and vice versa. Exactly the opposite of this is required, and an intermediate mechanism is necessary in order that the correct length

of feed be effected. Fig. 227 shows how this has been accomplished.

PHL is a bell crank lever, pivoted to the frame, and rocked by a solenoid, not shown in the figure. It operates the punch hammer, also not shown, and in addition

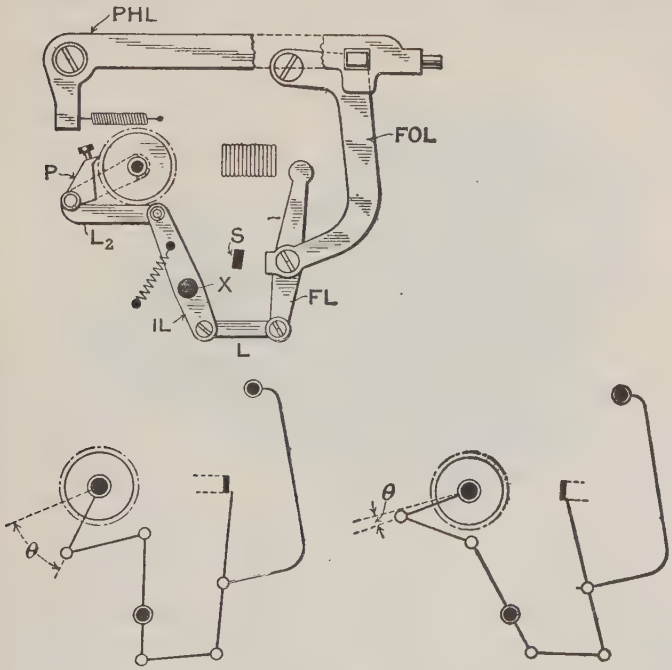

Fig. 227. Paper Feeding Device

controls a feed operating lever *FOL* again pivoted to the frame. The lower end of the feed operating lever has pivoted to it a floating lever *FL*, the upper end of which will bank against the lug of the last punch selector forming a letter. The floating lever *FL* is connected by a link *L*, to a two-armed intermediate lever *IL*, the upper end of which is joined by a link L_2 to the rocking arm carrying a feed pawl *P*.

The action of the apparatus will readily be appreciated by considering the two skeleton diagrams at the bottom of Fig. 227, the left-hand diagram representing the feed for a long letter and the right-hand diagram for a short one.

When the solenoid is energized the punch hammer lever is rocked in a clock-wise direction, and it operates the feed lever by means of a lug on the latter entering a slot formed in the first-named lever. The motion of the lower end of lever FOL continues until it comes up against stop S. In its travel it carries the floating lever FL until the head of this lever banks against the final lug of the character selected. This lug acts as a fulcrum, causing the floating lever FL to move the intermediate lever IL in a clockwise direction. Thus the feed pawl arm is drawn round in a counter-clockwise direction, setting the pawl for the subsequent feeding operation. The extent of the movement of pawl P depends upon the length of the letter, as shown in the diagrams. When the solenoid is de-energized, the floating lever flies back to a stop, not shown, and the feed wheel is operated under the combined effect of the spring on lever IL and the spring that retracts the feed mechanism.

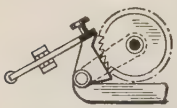

Fig. 228. Feed

It remains to explain the means by which the feed space between two letters is cut out to enable combination signs, such as UD and SN, to be formed. This is shown in Fig. 228. At the end of the feed stroke the pawl banks against a limiting stop to prevent "overthrowing." A distance piece equal in thickness to the pitch of the teeth on the feed ratchet wheel is interposed between the limiting stop and the banking face of the pawl. Thus, though the pawl is rocked through an angle equal to the length of a letter plus one space, the length of feed obtainable is only equal to that of the letter as the space element is cut out. The distance piece is operated by a key on the keyboard known as

the reduce key. The first letter key of a combined signal is first depressed, then the reduce feed key, and finally the second character key.

Creed Keyboard Perforator. This instrument (officially designated Perforator No. 40) (Fig. 229) is operated by a small electric motor; otherwise it is entirely mechanical. It is of simple construction with many less working parts than other types and has only two adjustments.

FIG. 229. CREED KEYBOARD PERFORATOR
(PERFORATOR NO. 40)

The mechanism (Fig. 230) consists of a *keyboard* composed of the requisite number of keys connected to horizontal *key bars* operating vertically above twenty *combination bars* and ten *space bars;* these bars are notched on their upper edges according to the requirements of the Morse code, and can move transversely below the key bars. Associated with the twenty combination bars are twenty *punches* with the corresponding *die* and *punch block;* the space bars, operating through *space stops*, control a tape feed device having a variable stroke. The punching, feeding, and resetting movements are obtained from a three-groove cam,

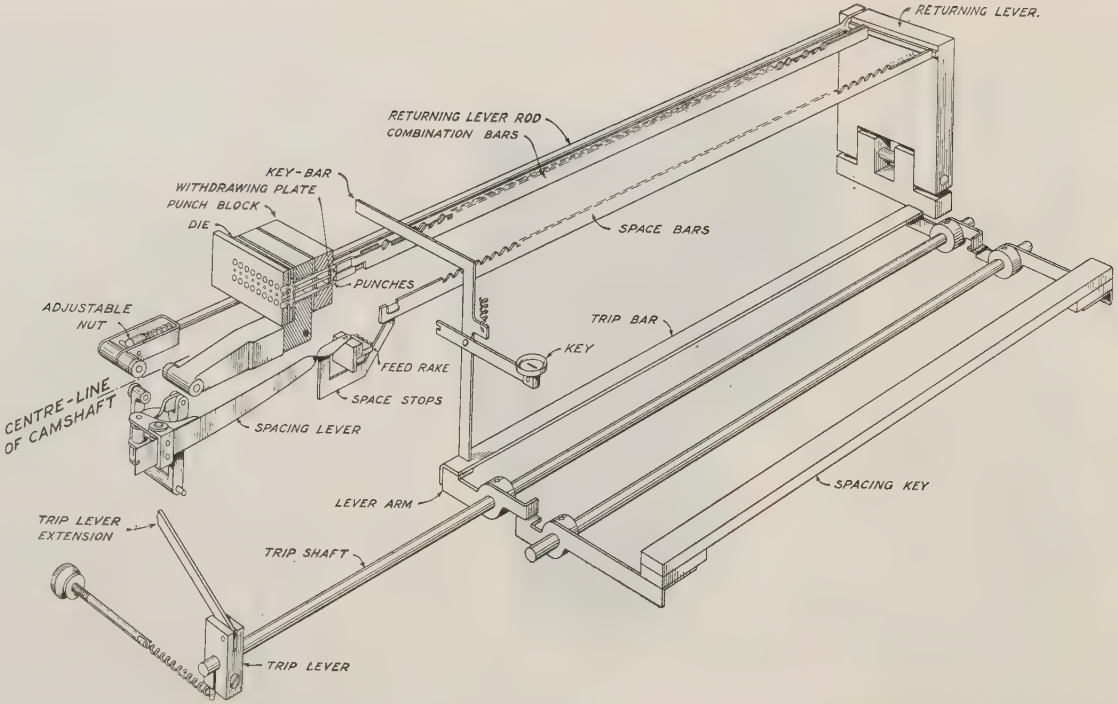

FIG. 230. MECHANISM OF CREED KEYBOARD PERFORATOR

carrying a *pawl* at one end (Fig. 232). The cam is supported on a continuously revolving shaft fitted with a *ratchet wheel* (Fig. 231) corresponding to the pawl on the cam. On the depression of a key the cam is brought into operation by means of a trip lever and trigger which control the pawl.

The operation of the perforator is as follows: Normally, when the machine is at rest with the *main shaft*

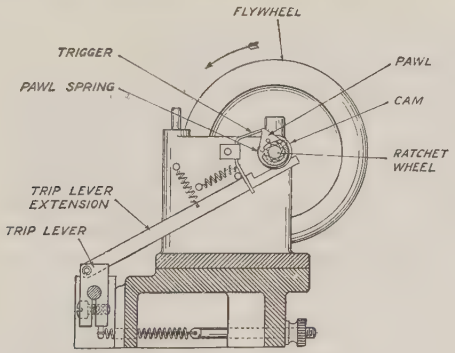

FIG. 231. END VIEW OF CAM SHAFT, RATCHET WHEEL, AND TRIP LEVER

(Fig. 232) running, the *returning lever* will hold the *combination bars* and *space bars* in their extreme left-hand positions (Fig. 230) with the left-hand ends of the combination bars arranged behind the punches and with the *space stops* connected to the left-hand ends of the space bars, held out of the path of the *feed rake*.

Upon depressing any one of the key levers the corresponding horizontal key bar will descend so as to engage and hold against endways motion those combination bars corresponding to the letter to be punched in the tape, and also all the space bars except one. The depression of the key lever also causes, through the downward movement of the vertical portion of the key bar, acting through the *trip bar*, *lever arm*, *trip shaft*, *trip lever*, and *trigger*, the release of the *pawl* allowing

it to engage with the revolving *ratchet wheel*, thus causing the *cam* to rotate. The returning cam through the *returning lever rod* moves the *returning lever* to its right-hand position, leaving the combination bars not concerned in the letter free to be moved to their right-hand inoperative positions. At the same time the required space bar is freed and moved to the right under the

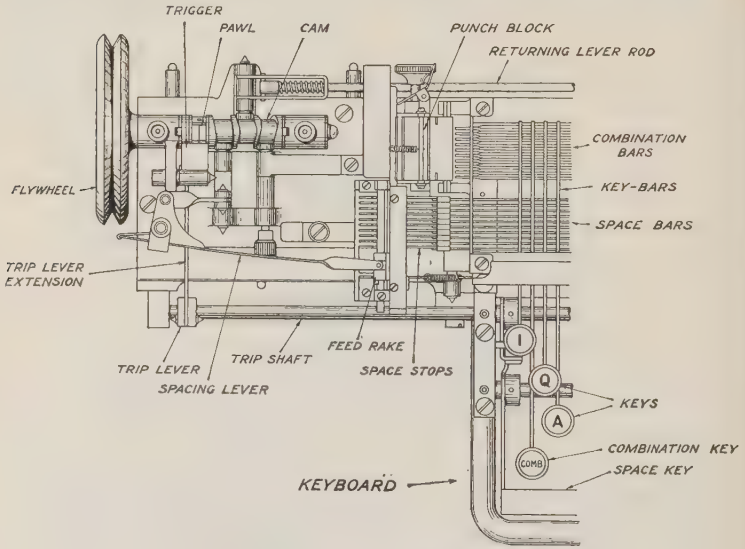

Fig. 232. Cam Shaft Detail

action of a spring bringing its corresponding space stop into the path of the feed rake, the remaining space bars being held by the depressed key bar.

The punching cam moves the punch block to the right, bringing the ends of the punches against the combination bars. Those bars which are held by the keybar, force the corresponding punches through the tape, the remainder being pushed idly to the right.

By reason of the movement of the punch block the feed rake is disengaged from the tape, and is thereupon

moved backward, under the control of the spacing cam, until it is arrested by the space stop in its path. The punch block is then returned to the left by the punching cam, withdrawing the tape from the punches, which are prevented from following by the punch withdrawing plate. The tape re-engages with the feed rake, which is then moved forward by the spacing cam and spacing lever to its normal position, bringing the succeeding portion of tape into position to be punched.

At the end of the return movement of the punch block and the forward movement of the feed rake, the returning lever resets the combination bars and space bars in their original positions in readiness for the next operation of the perforator.

On the completion of the foregoing operations the pawl and cam shaft, having made one revolution, are disengaged from the ratchet wheel by the trigger, which has been allowed to fall into position under the action of an eccentric cam.

The depression of the *spacing key* operates only on the trip shaft, causing the cams to make one revolution, repeating the cycle of operations except that, as no combination bars or space bars are held, no holes are punched in the tape, and the feed rake is stopped at a distance corresponding to one centre hole.

The *combination key* is jointed to one arm of a bell crank lever, the other arm of which is connected through a spring to a supplementary space stop arranged adjacent to the forward stop of the feed rake. The arrangement is such that the depression of the combination key moves this supplementary space stop to the right, causing it to bear against the feed rake which is in its forward position. When the next ordinary key is depressed the feed rake moves backward, allowing the supplementary space stop to take up its position in the return path of the feed rake, thereby reducing the amount of tape fed through by two centre holes, thus joining up successive letters.

Booth-Willmot Morse Keyboard Perforator. This perforator uses the standard 3-row keyboard, which is suitable for all codes whether of the 5-unit type or Morse. The advantage gained is very considerable since it is universally recognized that " touch typing " is the only efficient method of operation. Hence every touch typist would be able to use any perforator instead of each operator being confined to the keyboard arrangement with which he is familiar.

The arrangement is practically the same as that employed on the Booth-Willmot-Baudot keyboard perforator except that the Morse code requires many more code bars and additional levers. There is the same type of movable carriage, carrying the code bars, and it is shifted to the right or to the left to occupy one or other of two positions depending on the space lever last touched. There are two space levers, one for letters and the other for figures. Hence, after the letter space the key for " Q " will perforate—

whereas after the figure space the same key for " Q " will perforate—

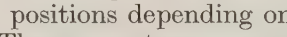

This arrangement applies to all the other keys.

As the demand for these machines is very limited, it is improbable that the construction of the new design will be undertaken at present.

TRANSMITTER

The Divided Lever. The transmitter (Fig. 233) is the equivalent of a small and extremely light double current key, worked mechanically, and the movements of which are determined by the positions of the larger holes in the perforated slip. This key consists of a divided lever playing between four contact points, and may conventionally be represented as in Figs. 234 and 235. The upper and lower halves of the

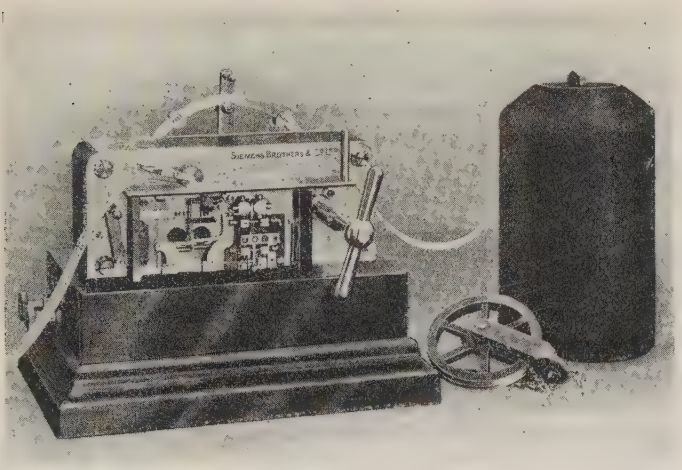

FIG. 233. WHEATSTONE TRANSMITTER

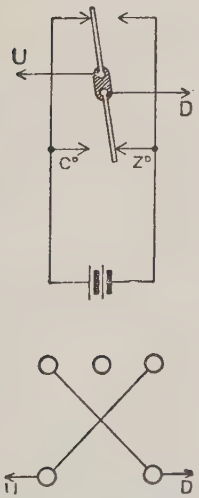

FIG. 234. DIVIDED LEVER IN SPACING POSITION, AND THE CORRESPONDING CONNECTIONS OF A DOUBLE CURRENT KEY

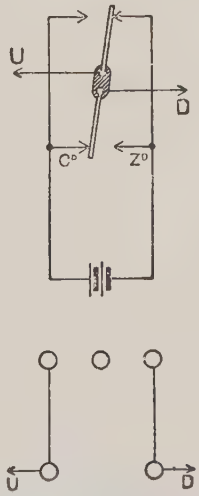

FIG. 235. DIVIDED LEVER IN MARKING POSITION, AND THE CORRESPONDING CONNECTIONS OF A DOUBLE CURRENT KEY

lever are rigidly connected but are electrically separate, i.e. insulated from each other. The two positions of the lever are shown side by side with the corresponding positions of a double current key below them. The upper half of the lever is connected to the up line and the lower half to the down line. The battery contacts have been marked to show the connections which result when the lever rests against them. It will be seen that the deflection of the lever (top) to the left makes the same connections as a double current key at rest but with its switch to send. The actual arrangement of the divided lever is shown upon the right in Fig. 236 and the upper and lower halves of the lever are distinctively marked. The battery contacts correspond strictly with the positions shown in the previous figure. The upper part terminating under *J* has a purely mechanical function.

It now remains to explain the mechanism by which the perforated slip controls the position of the divided lever.

Motive Power. The mechanical power required to drive the transmitter mechanism is usually furnished by the gradual descent of a heavy weight acting through a train of wheels. A handle for periodically raising the weight, and a governor, operated through a variable speed gear, form part of the arrangement.

In some of the larger offices a direct coupled electric motor is used to drive the transmitter.* The motor is connected to the town mains and is mounted on a bracket at the back of the transmitter. The $\frac{1}{10}$ h.p. motor is of the GM 2A type series wound, and takes 90 to 120 mA with 110^{v} at 2000 revolutions per minute. A resistance lamp is placed in the transmitter case (ventilated by small holes) in the space ordinarily occupied by the winding gear. In another type the motor drives the transmitter through a friction coupling.

* *Vide* "The Motor-driven Wheatstone Transmitter," by C. C. Vyle and E. V. Smart, in the *P.O.E.E. Journal*, Vol. I, pp. 97–102.

The driving mechanism causes a rocking lever known as the rocking beam to move up and down at a speed which conforms with the rate at which the star wheel moves the perforated tape through the instrument. These two allied movements are made by suitable gearing. The movement of the beam is effected through a horizontally projecting pin placed near the edge of a revolving wheel and connected by a lever to one end of the rocking beam. The rocking beam is furnished with two pins P and P'; (Fig. 236) which project horizontally and oscillate with it.

Arrangement of the Reciprocating Rods and Divided Lever. The two pivoted cranks A and A' are held against the lower sides of P and P' by the two spiral springs connected at right angles to the lower extensions of A and A'. Rising from the inner ends of the two cranks are the pivoted rods S and M. The position of rod S (Fig. 236) is about a quarter of an inch in front of M across, and M is one-tenth of an inch to the right of S in, the line of the perforated slip. These positions have been modified in the figure in order that both rods might be distinctly shown. The play of the rods in a direction to the right is limited by two adjustable screws against which they are normally held by the two spiral springs fixed to them and to the pin on the right. The rods pass through two slots in the brass case (shown in Fig. 233) of sufficient width readily to admit them, but without permitting any considerable movement in a direction transverse to the motion of the tape past them. As the movement of the paper tape is continuous it will drag the rods to the left during the time that either of them happens to be projecting through a hole, hence, the slots in the top of the platform and the springs for drawing the rods back to their correct position against the stop-screws ready to meet the next perforation. Between the rods is placed the star wheel, the projections of which pass through the central holes of the perforated slip, so guiding and propelling it.

Above the star wheel is placed a roller rather broader than the slip and with grooves which engage the projections of the star wheel as they pass through the slip. This roller is furnished with a handle, so that the slip may readily be removed without having to wait until the whole length has passed through the transmitter.

With no slip in the transmitter the rods S and M follow the motions of the rocking beam, and so alternately rise and fall with it. The lower end of the left crank moves to the right when the rod S rises, and this pushes the lower end of the divided lever over to the right by means of the rod and boss K. The rising of the back rod M similarly causes K' to move the top end of the divided lever to the right. Examining the last two sentences with the aid of Figs. 234 and 235 will show that a spacing current is sent out when the front rod S rises, whilst a marking current results from the rising of M. The effect of running the transmitter without slip is to send out an unbroken series of reversals which register dots upon the distant polarized receiving instrument.

If, after the marking rod has risen, the spacing rod is stopped at the level of the paper, the marking current will be continued until the spacing rod is able to rise. The marking rod in rising moves the divided lever over to the right (upper part to the right, lower to the left), where it is held firmly against the contacts by the jockey roller J. The divided lever cannot remain permanently in its central position; it is always held on one side or the other by the action of the jockey roller on the upper extension of the divided lever. This extension is mechanical and is electrically separate from the upper half (up line terminal) of the lever. It will be seen that immediately the lever moves to either side of the centre of the jockey wheel the spring which carries the wheel ensures that the contacts shall be firmly made and maintained.

Action of Transmitter in Signalling a Word. A sketch

of the perforated slip required to transmit the word "and" is shown in Fig. 237. The upper holes pass the rod M, and the lower ones pass S. When in the transmitter the lower holes are to the front of the transmitter, and the slip moves past the rods from right

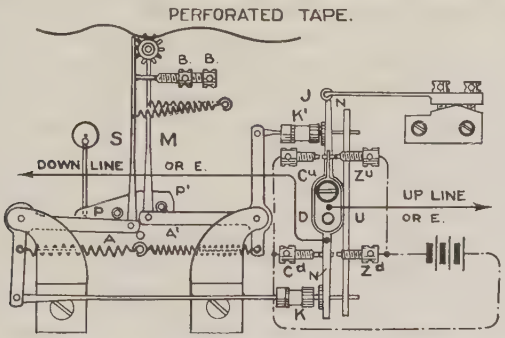

FIG. 236. PRINCIPLE OF WHEATSTONE TRANSMITTER

to left. The exact process by which the punched holes in the slip control the positions of the lever may now be very readily traced. Let the perforated slip depicted in Fig. 237 be passed through the transmitter, and let

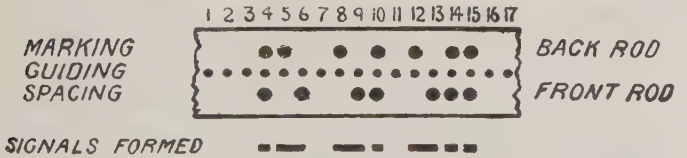

FIG. 237. PERFORATED SLIP AND CORRESPONDING RECEIVED MARKS

it be assumed that prior to this the S rod last rose above the level of the paper. This being so, the lever was pushed over to the left (lower portion to the right), and is held there by the jockey wheel and spring. The central holes of the slip engage the star wheel, and the slip is drawn forward. The marking rod rises with the upward movement of P' (Fig. 236), but meets the full

paper which prevents it rising sufficiently to allow K' to push over the divided lever. The spacing current therefore continues. The spacing rod next rises when P moves upwards, but, meeting the full paper, it does not cause K to touch the lever. The rod M on rising again is still met by the paper, and is therefore unable to stop the spacing current which still continues. The spacing rod next rises, but is met by the paper. The first holes are now opposite the rods, and when the marking rod rises it passes through the hole and reverses the position of the divided lever, thus sending out a marking current. The spacing rod upon rising passes through the hole opposite that through which the marking rod has just passed. This returns the lever to the spacing side, and ends the mark by restoring the spacing current. Where the two rods successively pass through two holes directly opposite each other the shortest marking current, a dot, is transmitted. The marking rod now rises through the hole opposite 5, and a marking current again results. The spacing rod, however, is met by the full paper, and is therefore unable to reverse the lever, with the result that the jockey wheel still holds the lever to the marking side. The marking rod next rises opposite 6, but meeting the full paper leaves matters *in statu quo*. The spacing rod now meets a hole, and upon rising through it, terminates the mark by reversing the lever. At 7 the marking rod is unable to rise fully, and the space continues until the rod again rises at 8. The mark then commenced is not ended until the spacing rod has risen for the second time, when it passes through the hole and ends the dash at 9. At 10 a dot is transmitted, and the spacing current again continues until 12 is reached, when the dash in " d " is transmitted, followed by the two dots. The last current is of course spacing.

In commencing the detailed explanation of the transmission of the word " and " it was assumed for

convenience that the divided lever was on the spacing side. This assumption is not warranted, since it may readily happen that in putting in the slip *M* was the last rod to rise above the level of the paper. The effect would be that a continuous mark would be registered until the spacing rod rose at 4. In perforating a slip for transmission a few A's are usually punched before the actual message, in order that the first signal of the message may be clearly received and may not be merged into a continuous mark.

Summary of Action of Transmitter. The results of the previous investigations into the action of the transmitter may now be summarized—

1. The back rod and back holes control the marking, and the front rod and front holes the spacing currents.

2. The last rod to rise above the level of the paper produces an effect (spacing or marking) which is continued until the other rod rises above the level of the paper.

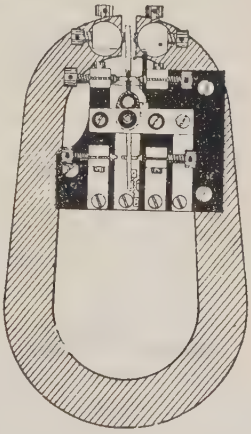

FIG. 238. MAGNETIC BIAS TRANSMITTER

Magnetic Bias Transmitter. In another pattern of transmitter the jockey wheel has been replaced by a magnetic bias. The arrangement is depicted in Fig. 238 where it will be seen that the upper part of the lever plays between the polepieces of a powerful horseshoe magnet. The device is so entirely similar in action to a relay which has been adjusted to neutrality that detailed description is scarcely necessary. Suffice it to say that when deflected to either side the extension of the divided lever is nearer to the polepiece against which it deflects, and that magnetic attraction serves to maintain the contacts made by the movement of the lever. The advantages gained are (1) the entire

elimination of the heavy downward pressure due to the use of the jockey wheel and spring, (2) the lever is held over more firmly, (3) a smaller relative movement between the magnet and the divided lever is required than was necessary with the jockey wheel, and (4) less driving power is required.

Whilst effecting this change an opportunity was taken to substitute pivoted crossheads for the holes and pins of the horizontal levers, and also to make their adjustments more easily accessible. These improvements, due to J. W. Willmot, have had a marked effect in two directions ; firstly, greater permanency of adjustments ; and, secondly, far less wear and tear of the moving parts. The former is a matter of the utmost importance for the reason that the adjustment of a transmitter is at the best a lengthy and tedious operation. When traffic is being delayed by faulty adjustment it is quite hopeless to attempt to remedy it on the spot, and a new transmitter should be substituted at once.

Transmitter Bias. The four battery contact screws require most careful and accurate adjustment in order that the currents sent out by the transmitter may be of exactly equal duration. The positions of K and K^1 (Fig. 236) are, for the same reason, of equal importance. When once made, re-regulation is not required for some time, but it is inevitable that sooner or later the relative positions of the moving parts will slightly alter. The result in a pronounced case is that the transmitter sends out a current in one direction only when run without slip. In less pronounced cases the defect is termed a marking or spacing bias, according to whether the marking or spacing current is of longer duration than the other. If the currents are, as they should be, of exactly equal duration and value the needle of the galvanometer will oscillate to an equal extent upon either side of zero. If the galvanometer is permanently deflected it is evidence that a bias exists, or, in other

words, that the marking and spacing currents are of unequal length. Therefore, to prove a transmitter it should be run very slowly without slip, and the value of the deflections upon the galvanometer in both directions should be quite equal. The speed should then be increased, when the galvanometer should stand

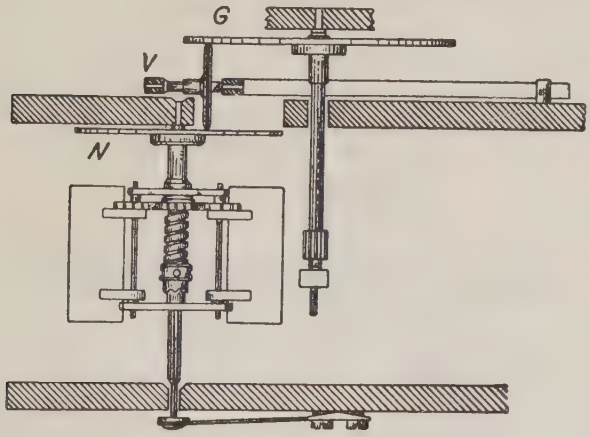

FIG. 239 ARRANGEMENT OF SPEED GEAR AND FANS—LEVER AT "SLOW"

at zero, or rather should oscillate to an extremely small extent about zero.

Arrangement for Regulating the Speed of the Transmitter. It is essential that the speed of the transmitter should be capable of wide variation in order that the same instrument may be used upon all Wheatstone circuits, and also to meet the case where a reduction in speed is necessitated by slight defects upon the line. This is effected by the governor and the variable speed gear shown in Fig. 239. The smaller nickel silver disc V serves to transmit the motion of the steel driving disc G to the steel fan disc N. Now the position of V between G and N may be altered by means of the speed lever. In Fig. 239 the fan disc N

revolves much faster than the driving disc, and therefore a comparatively slow motion of G produces a relatively fast motion of N. When the disc V is moved to the position shown in Fig. 240, the conditions are reversed and a fast motion of the driving disc produces a relatively slow motion of the fan disc.

The two fans are mounted upon toothed wheels engaging with the wheel upon the axle of the fan. Normally the fans are held in the position shown in Fig. 241 by the action of the spring which is clearly visible in Figs. 239 and 240. Immediately the fan disc begins to move the fans fly outwards (see Fig. 239) by

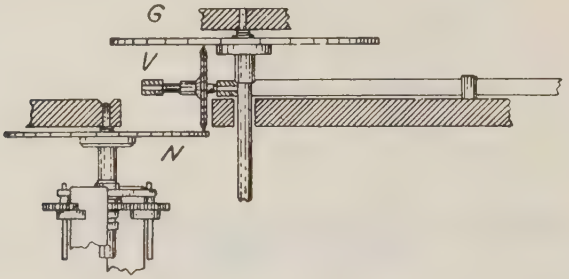

Fig. 240. Lever at "Fast"

centrifugal force, and offer a resistance to passage through the air which becomes greater and greater as the area of the circle described by the outer edge of the fans increases. It will therefore be seen that when the connecting disc V is in the position shown in Fig. 239, the speed of the transmitter is least on account of the energy taken to drive the fan. In the following figure the conditions are reversed, and the energy taken up by the fan is correspondingly less since a fast motion of G produces a relatively slow motion of N.

Since the friction between the three discs is relied upon to transmit the motion of the driving system to the fan governor, it is essential that the discs should be firmly pressed together, that the surfaces which

are brought into contact should be perfectly smooth, and, lastly, that the discs should be absolutely clean. The spring (Fig. 239) acting on the axle of the fan holds the fan disc in firm contact with the movable disc. A jewelled bearing is employed, as the wear upon the pivot would otherwise be very great.

Action of Fan in Maintaining Uniformity of Speed. The fan governor also performs another important function in eliminating all minor fluctuations of speed. If, whilst the instrument is running, there suddenly occurs a tendency towards reduced speed the fans move inwards a little, thus taking less energy to drive them, and so reducing the effect. In similar fashion the governor opposes any sudden increase of speed.

Fig. 241. Fans Closed

Stopping and Starting Lever. A lever is provided to stop and start the transmitter. This lever when in its left-hand position (transmitter stopped) engages with a projection upon the axle of the fans. When turned to the right the fan axle is released and the instrument at once starts. In addition, the lever actuates a switch placed upon the under-side of the instrument. This switch is described and explained upon page 427, under the heading of "Transmitter Switch."

"Bolting" of Transmitter. If by any chance a little grease or oil should get on the discs or should the spring become weak the transmitter will "bolt." The whole of the mechanism which is driven by the weight is released from the control of the governor, the speed becomes abnormally great, and the weight rapidly descends. This descent is in fact so rapid that injury would result if the foot were caught by the falling weight, and therefore an iron guard is always placed round the weight in such a way as to prevent the feet from being placed beneath it.

Speed of Slip. The transmitter should give a slow speed of not more than 7 ft. and a high or full speed of not less than 80 ft. of slip (400 words) per minute. The speed of working may be obtained by dividing

3000 by the time in seconds occupied in passing 10 ft. of perforated slip (reckoned as 50 words) through the instrument. As the base of the receiver is exactly 12 in. long it may be used as a measure.

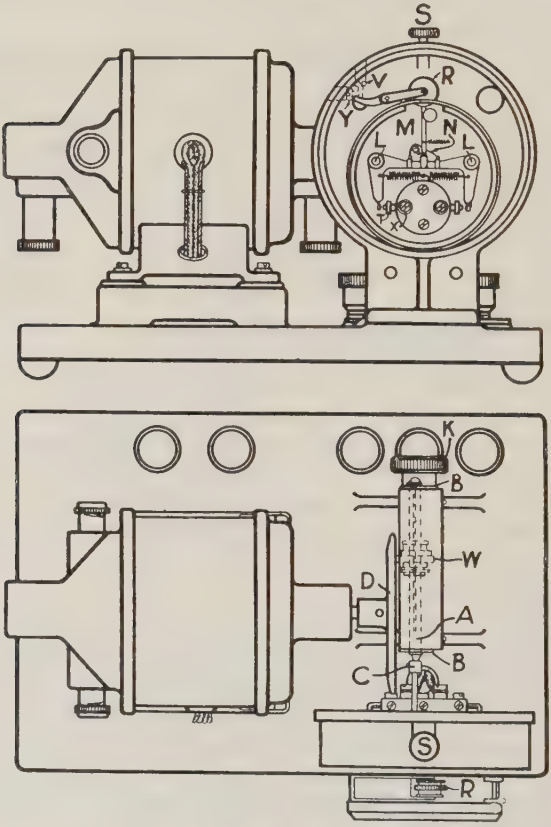

Fig. 242. Creed Transmitter

Other Types of Transmitter. The Wheatstone system is now rarely worked at a speed of even 200 words per minute, and consequently a simpler form of transmitter can be designed. The Creed type (Fig. 242) is

driven by a small electric motor through friction discs, one of which can be moved across the face of the driven disc to obtain the precise speed required. The marking and spacing rods are attached to the horizontal ends of two ⌐-shaped levers, the other ends of which are furnished with contacts which make connection with the adjoining contact screws when the rods rise through the perforations of the slip. The arrangement is in fact a Wheatstone transmitter minus the divided lever and jockey roller. The signals are sent to line from the local contacts of a neutrally adjusted relay.

THE RECEIVER

The receiver is a polarized direct writer of somewhat special construction. Its electrical and magnetic parts are almost identical with those of the standard relay. Between its two electro-magnets are placed two soft iron armatures rendered magnetic by induction from a powerful horseshoe magnet placed behind them. There is, however, the difference that the spacing screw moves the electro-magnets bodily to right or left according to the direction in which the screw is turned. In a relay the contact points are mounted upon a movable platform, whilst in the receiver they are fixed.

Since there is no necessity to limit the space taken up by this magnet it is not curved round the coils. The upper end of the axle carrying the armatures bears an arm through which passes the revolving ink wheel axle (Fig. 243). The movements of the armatures produce a lateral movement of the ink wheel, so bringing it into contact with the slip and thus making a mark. The standard breadth of the marks is 16 mils.

Inking Arrangements. The armatures normally rest upon the right side, and a current in the direction *U* to *D* causes them to be deflected to the left. The small inking wheel (Fig. 243) revolves in a direction opposite

to that in which the slip ($3\frac{1}{2}$ mils thick) is carried past it, and ink is supplied to it by the larger feeding wheel which dips into the ink-well. This wheel revolves in the opposite direction to the inking wheel, and is normally all but touching it. The object of the device

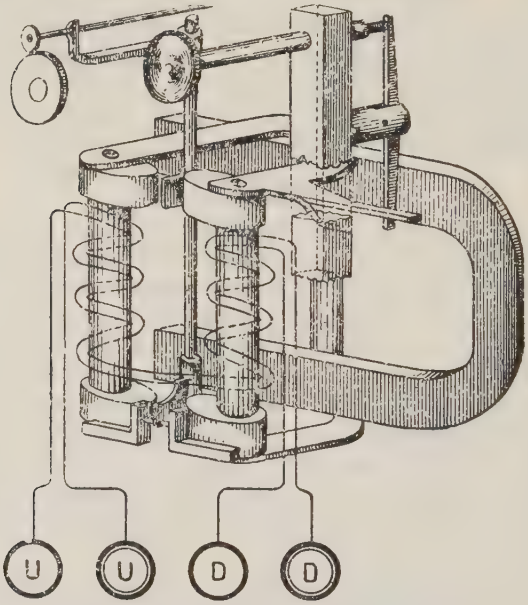

Fig. 243. Principle of Wheatstone Receiver

is to prevent large quantities of ink being thrown on to the paper when the speed is varied, and the use of the intermediary wheel ensures that the inking wheel shall always be sufficiently inked, but at the highest speed shall not be inked to such an extent as to cause the marks to be indistinct. In fact, so well does the arrangement fulfil its function that there is no practical difference in the marks between slow and full speed.

Motive Power. As in the case of the transmitter, the

power is generally supplied by a weight geared to a train of wheels, but at some of the larger centres an electric motor is substituted for the weight drive. The receiver is direct coupled in a similar fashion to that described in the case of the transmitter.

The speed is adjustable by means of the lever at the back which alters the position of the nickel silver driving disc upon the fan disc in a similar manner to that described in the case of the transmitter. The speed of the star wheel in a Wheatstone transmitter is much higher than that of the paper roller in the receiver, and therefore the variable speed gear in the latter case is of a somewhat simpler form. The nickel silver disc is carried upon an axle which is directly geared to the driving axle by means of toothed wheels, and there is thus only one connection produced by friction. The governor used to regulate the speed, and the starting and stopping device are also similar to those used in the transmitter.

The descent of the weight causes the slip roller and the inking and feeding discs to revolve. Above the slip roller is placed a second roller which may be raised by moving the small front lever at the top of the instrument to the right. This facilitates the removal of the paper dust which accumulates round these parts of the receiver. The general appearance of a Wheatstone receiver is shown in Fig. 244.

Double Slip Drawer and Bell. Receivers are frequently furnished with two slip drawers (see Fig. 244), so that the slip from the second drawer may be rapidly brought into use in the event of that in the first drawer running out. This can be done so rapidly that the interval between the insertion of two consecutive punched slips is ample for the purpose. It is also now the custom to redden a length of the slip near the end of the roll so as to give timely warning of its coming exhaustion.

A short chain is attached to the weight in such a way

that when the weight is nearly run down a bell is rung, thus warning the key clerk to re-wind the motor.

Motor and Train. The receiver consists of two separate parts, the motor and the train. The former comprises the slip drawers and, as its name implies, the weight with the winding and driving axles. By means of a catch at the back, the driving axle, which is furnished with a ratchet wheel, can be held by moving over

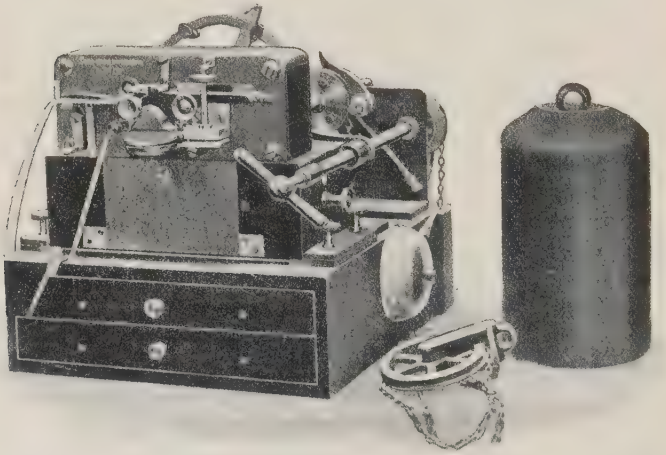

Fig. 244. View of a Wheatstone Receiver

the pawl seen to the right of the front chain wheel. The train can then readily be removed from the motor and another substituted. This is obviously a much more expeditious process than removing the instrument as a whole.

Winding of Coils.* The winding of the coils and their terminals are shown in Fig. 245. The use of a single winding of correspondingly thicker wire, instead of

* This subject is fully discussed under "The Post Office Standard Relay," by W. Cruickshank, *P.O.E.E. Journal*, Vol. XVII, p. 255 (January, 1925).

the two windings placed in parallel, would give a slightly better figure of merit. Upon the other hand the arrangement described no doubt facilitates differential adjustment.

Adjustment. The lower armature is furnished with a platinum-tipped extension for completing the local circuit of the sounder. The adjustment of the instrument is fortunately quite simple, but it must be remembered that two conditions

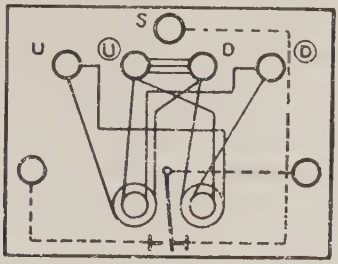

FIG. 245. CONNECTIONS OF RECEIVER

have to be fulfilled, viz. that both the printing and the sounder marks should be correctly received. By improper adjustment it frequently happens that only one of these conditions is fulfilled. The inking discs should be kept clean, since otherwise more play is required and a slower speed of working results. The best method of adjustment is as follows—

1. Place the spacing screw in its central position.

2. Adjust the left contact screw until, when the tongue is put over to the left, a broken line of dots appears upon the slip, continue this until the point is reached where a full line is just obtained, and give a further slight turn to the screw in order to provide a margin.

3. Close up the right contact screw until the continuous line is just cleared, when the tongue is moved to the right. Then give a further slight turn to the screw to provide a margin.

The final adjustment to the instrument may be made by the spacing screw from observation of signals transmitted at full speed. The adoption of this systematic method will be found to result in better working and greater permanency of the adjustment when once made.

Spring Receivers, Speed of Slip, and Figures of Merit. The early Wheatstone receivers were worked by a spring instead of a weight. They may be used in any case where the maximum speed required does not greatly exceed 200 words per minute. The speed of the slip when the lever is in the position for slowest speed should not be more than 8 ft. per minute, and at highest speed not less than 36 ft. a minute. The speeds of the slip with a weight-driven receiver should range from not more than 8 to not less than 60 ft. per minute. The resistances of the coils are in each case the same, viz. 100^{ω} each, i.e. 200^{ω} in series and 50^{ω} in parallel. The figures of merit are also the same, 10 mA with the coils in parallel for key speed working, and 17·5 mA for the maximum speed of each instrument, but in this case a shunted condenser is employed, and the coils are placed in series.

THE SHUNTED CONDENSER, SELF-INDUCTION, AND TIME-CONSTANT

It is possible very greatly to reduce the retarding effect of self-induction by the use of a resistance and condenser of suitable values. The condenser is placed across the terminals of the resistance, and the arrangement as a whole is usually termed a "shunted condenser."

Before tracing the causes of the action mentioned it is desirable that the effect of inductance in delaying the rise of the current should be carefully examined. Let a battery, key, and an inductive resistance (a resistance having self-induction) be joined up in series. The value of the current given by applying Ohm's law represents the final or full value, but at the instant at which the key is closed the current is zero. The time taken for the current to rise to its full value or to any given percentage of its full value depends solely upon the inductance and resistance of the circuit. It is therefore quite independent of the value of the E.M.F.

or current used.* The "time-constant" of such a circuit is defined as the time in seconds taken for the current to rise to ·632 (roughly $\frac{2}{3}$) of its maximum value, and is equal to the inductance (in henrys) divided by the resistance (in ohms) of the circuit.† Assuming that the inductance, say 3 henrys, is constant, and that the E.M.F. and resistance acting in the circuit are respectively 12 volts and 500$^{\omega}$, the time-constant is $\frac{3}{500} = ·006$ second. This is the time taken for the current to rise to approximately $\frac{2}{3}$ of its full value, i.e. to $\frac{2}{3}$ of $\frac{12}{500}$ ampere = 16 mA. Had the E.M.F. of the battery been 24 volts the current would have been 32 mA ·006 second after the circuit had been completed.

It will be seen that any particular value of current may be obtained in any given time provided a large enough E.M.F. is employed. For instance, the current in the circuit described would be 16 mA in ·0006 second had 84·2 volts been used, or in ·00006 second with 800 volts.

Use of Shunted Condenser to Balance Self-induction. In Fig. 246 a relay having an inductance of $3\frac{1}{4}$ henrys

* The current C due to an E.M.F. of E volts at any instant of time t seconds after closing the circuit, having R ohms resistance and L henrys inductance, is given by Helmholtz's equation—

$$C = \frac{E}{R}\left(1 - \epsilon^{-\frac{Rt}{L}}\right) \text{ where } \epsilon = 2·7183$$

$$\text{If } t = \frac{L}{R},\ C = \frac{E}{R}\left(\frac{\epsilon - 1}{\epsilon}\right) = \frac{E}{R} \times ·632$$

The following derived equation may also be useful—

$$\frac{Rt}{L} = \log_{\epsilon} \frac{1}{1 - CR/E} = ·4343 \log_{10} \frac{1}{1 - CR/E}$$

Derivation and proof of the Helmholtz equation are given in many textbooks on magnetism and electricity, e.g. that by H. E. Hadley, p. 431, 1926 edition.

† Where an electro-magnet with an iron core is concerned the inductance depends upon the value of the current, since the permeability of the iron varies with different values of magnetizing force. The inductance increases, due to the increase of the permeability, as the magnetizing force increases for all values ordinarily used in telegraphy.

is shown in series with a shunted condenser, battery, and key. The capacity and resistance of the shunted condenser have been so arranged, that, when the key is released after depression the discharge of the condenser balances that of the relay. Whilst the key is depressed the condenser is charged by the difference of potential (20^{v}) existing between the ends of the 1000$^{\omega}$ resistance. If now the key is released the

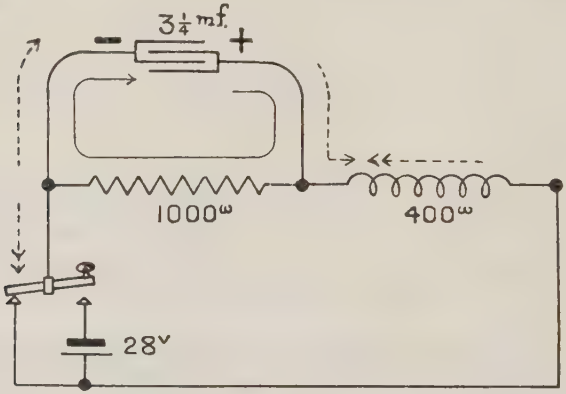

Fig. 246. Use of Shunted Condenser to Balance Self-induction

condenser discharges through the 1000$^{\omega}$ resistance, but in parallel with this is the 400$^{\omega}$ relay. The relay, having self-inductance, would generate an E.M.F. in the direction indicated by the dotted double arrow tending to prolong the main current.

This E.M.F. is opposed by that existing between the ends of the 1000 ohms resistance depicted by the dotted single arrows. The current therefore falls quickly to zero and the prolongation of the current due to self-induction is reduced.

Mathematical formulae for the rise and fall of the current on depression and release of the key in the circuit shown in Fig. 246 have been developed by

A. B. Morice.* He there shows the significance of the relation

$$KR^2 = L \quad . \quad . \quad . \quad . \quad . \quad (1)$$

and also proves that the equation

$$KR^2 = \frac{L}{1 - \omega^2 LK} \quad . \quad . \quad . \quad . \quad (2)$$

must be satisfied if the signal in the relay coil is to be "square-topped." In these equations L is the inductance of the relay, K and R are the capacity and resistance of the shunted condenser respectively and $\omega = 2\pi \times$ frequency. It can only be a coincidence if one set of values of K and R satisfy equation (2) for the infinite number of frequencies which compose a "square-topped" signal.

There is a comparatively wide variation in the inductance of Post Office relays and receivers with variations of current and frequency. The following table, which gives the results of tests of the inductance of a standard "B" relay with its coils in series will illustrate this point—

Frequency f cycles per second	Inductance in Henrys with Testing Current of		
	1 mA	10 mA	25 mA
0 (Ballistic test) . . .	2·64	3·69	3·90
160	1·08	2·08	2·22

With a pure sine wave the equation $KR^2 = \frac{L}{1 - \omega^2 LK}$ can be satisfied if the applied voltage has a frequency of $\frac{\omega}{2\pi}$ and if the value of L is correct for the current in the coil with this frequency.

* "The Theory of the Shunted Condenser," by A. B. Morice, B.Sc., *P.O.E.E. Journal*, Vol. XVIII, p. 1, April, 1925, and p. 302, Oct., 1925.

If the rise of current in the relay in Fig. 246 is made very rapid by means of the shunted condenser, the shape of the signal will generally be as shown by the curve in Fig. 247. This type of signal is usually considered to be ideal as the initial excess of current will result in a quick movement of the relay contact arm from one stop to the other and the steady value will then hold the arm firmly on the working contact.

The shunted condenser not only secures that the current through the electro-magnet shall not be prolonged but it also hastens the rise of the current. It has previously been explained that a condenser connected across a resistance acts as a short circuit upon that resistance until charged. Taking the case of Fig. 246, the difference of potential between the ends of the relay (assuming the battery resistance as nothing) is 8 volts when the current has attained its full value of 20 mA. But at the instant at which the key is depressed, this difference of potential is equal to the full E.M.F. of the battery, viz. 28 volts. From the investigations of page 419 it will be obvious that the current rises at a far higher rate than it would if the condenser were disconnected and the difference of potential between the ends of the relay did not exceed 8 volts.

FIG. 247.
SIGNAL SHAPE

When the condenser is fully charged the whole of the current passes through the 1000^{ω} resistance. Between this condition and that resulting at the instant when the key is depressed there are, of course, intermediate conditions. The action of the condenser can be made quite apparent by imagining that it is replaced by a resistance which increases in value from nothing to infinity (disconnection) during the time which the condenser takes to become fully charged. From this it is obvious that the difference of potential across the relay falls from 28 volts at the instant when the key

is depressed to 8 volts when the condenser is fully charged.

Action of Shunted Condenser in Wheatstone Working. In high-speed Wheatstone working a shunted condenser is invariably employed to enhance the speed of working. Upon a long circuit or upon one having considerable capacity its beneficial effects are produced by its action with or upon the static charge of the line. The general principle of the action can readily be

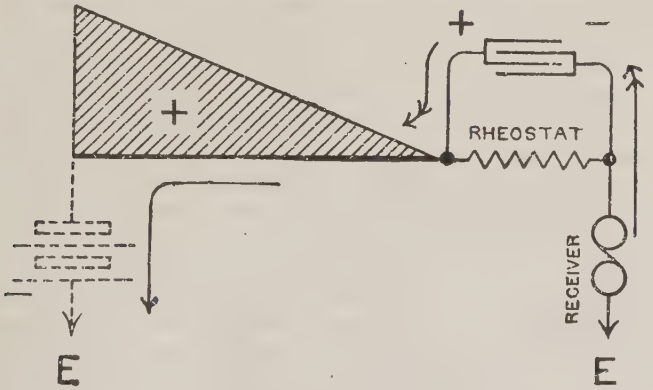

FIG. 248. PRINCIPLE OF SHUNTED CONDENSER USED UPON A WHEATSTONE CIRCUIT

explained but the rigorous mathematical proof is quite beyond the scope of the present work.

The shaded triangle in Fig. 248 represents the value and distribution of the charge existing upon the wire when the positive pole of the battery is connected to line. The condenser is also charged in the direction indicated. At the instant when the battery is reversed and is connected as shown the conditions illustrated in the figure obtain. The condenser discharges into the line, thus producing a current through the receiver in the direction of the reversed battery and shown by the double-arrow. It must not be overlooked that the receiver possesses a considerable amount of inductance,

and that, at the moment of reversal of the battery, the E.M.F. due to this cause comes into play in such a direction as would, in the absence of the shunted condenser, facilitate the passage of a portion of the static charge upon the line through the receiver coils, so causing prolongation and thereby diminishing the speed of working by reason of the increased time taken for the current in the receiver to change in direction. Even supposing that the receiver had negligible inductance, the shunted condenser would still produce highly beneficial results since it would reverse the current in the receiver immediately the battery was reversed and would prevent the line from discharging through the receiver. Under existing practical conditions its action is firstly, to prevent the line discharging through the receiver—a tendency which would be aided by the E.M.F. of self-induction—and, having eliminated this, secondly, by its continued action creates a difference of potential across the terminals of the receiver which causes the current to rise rapidly to its full value in the reverse direction—in fact, this happens before the positive charge upon the line has been reversed in sign. The condenser acts instantly the battery is reversed and only ceases to act when fully charged in the reverse direction. It may be noted that the period of disconnection during which the lever of the transmitter is crossing from side to side is so small that the condenser is almost fully charged, since there is not time for it to discharge through its shunt.

It will now be well to examine the effect of using too much and too little capacity in the condenser. The direct consequence of wrong adjustment is, of course, a reduction in the speed of working, but the effect upon the marks received may profitably be considered.

In the Morse systems, whether automatic or key, the elementary signals (dots and dashes) are of unequal length. A dash means that the battery is applied for

three times as long as for a dot. If, therefore, the letter " N " is sent the spacing current following the dash may not reverse the charge upon the line, and therefore the dash and the succeeding dot would run together, whilst " A " would probably be transformed into " T " : i.e. a dot, following a spacing current of a duration equal to a dash, would be lost entirely. Again a " B " might be transformed into " G." It is this effect which the shunted condenser remedies by coming into action the instant the battery is reversed. With too little capacity, then, a dot following a dash run together and a dot following a long space is lost.

If now the capacity of the condenser is too great the last dot of an " N " would disappear, and the dot and dash of an " A " would run together.

For any particular circuit there is always a best value to give to the capacity and resistance of the shunted condenser, and this may readily be found by the passage of working signals.

Adjustment of Shunted Condenser. The resistance in the shunted condenser usually approximates to the resistance of the rest of the circuit, and the value of the capacity required is then obtained by the passage of working signals at the maximum speed at which the circuit can be worked. The value will be found to vary for each particular circuit, generally speaking the longer the circuit the higher will be the capacity required. Where, however, the capacity is very great a smaller current and a much higher shunt resistance gives better results.

The value of the current received with the switch turned should be 16 mA with the coils in parallel, and the resistance in the rheostat should be reduced until this current (37° on the differential galvanometer with its coils in parallel) is obtained ; with the receiver in series 8 mA (20° on the galvanometer) only is required. If the resistance in the rheostat has to be lowered to

an amount altogether out of proportion to the resistance of the rest of the circuit the power should be increased.

Action of Shunted Condenser upon a very Short Circuit. The beneficial action of the shunted condenser is usually ascribed to its effect in neutralizing or rather mitigating the effects of self-induction in the receiver coils. This is, however, only true where the circuit is very short and has practically no capacity.

Upon such a circuit, having little or no capacity, a shunted condenser effects a small economy in battery power. By disconnecting the condenser and increasing the battery power the same speed can be obtained as with the condenser. The effects of self-induction can always be smothered by introducing resistance into the circuit and raising the battery power. The time-constant of the circuit may be thus reduced to any required extent. For instance, the time-constant of a circuit containing a battery (100^{ω} resistance) and a receiver in series is $\frac{3 \cdot 25}{300} = \cdot 01083$ second, with a resistance of 1700^{ω} added it is $\frac{3 \cdot 25}{2000} = \cdot 001625$ second, assuming that the value of the current is the same in each case.

Resistance of Sending Circuit. It has previously been stated that each coil of the differential galvanometer (50^{ω}) is shunted by a 300^{ω} resistance coil in order to reduce the inductance. In order that a signal may be formed upon the distant receiver in the shortest possible time, the resistance of the sending circuit should be as low as possible, subject to the qualification that it shall not be so small as to cause the transmitter to spark (see Appendix A). The effect of self-induction in the sending circuit is even more serious, and it is upon this account that the coils are shunted as already explained. They are also invariably joined up in parallel, thereby reducing both the resistance and

inductance of the instrument to one-fourth of the value which it would have with the coils in series.

Transmitter Switch. The lever provided for stopping and starting the transmitter also operates the switch referred to on page 411. When the transmitter is not

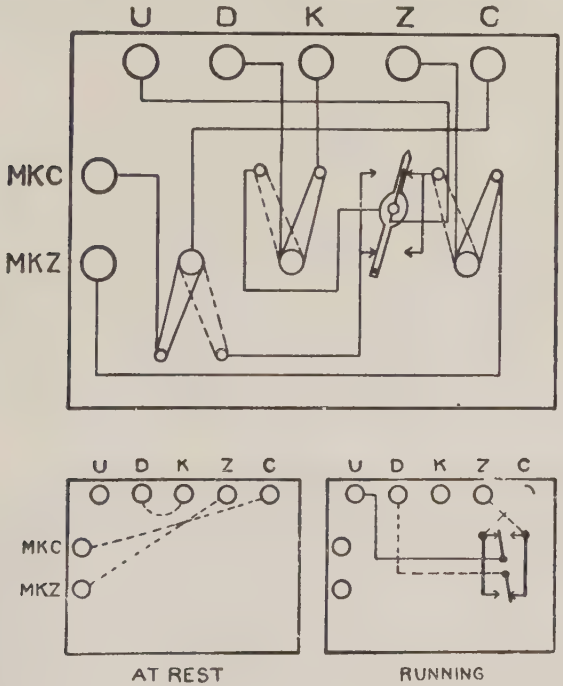

FIG. 249. WHEATSTONE TRANSMITTER, INTERNAL AND SKELETON CONNECTIONS

actually running this switch joins the battery through to *Z* and *C* of the double current key provided for making or answering calls and for the sending of acknowledgments. Also it joins the down line through to the lower right terminal of the key. The connections of the transmitter with its switch are depicted in Fig. 249. The switch consists practically of three

two-way switches mechanically connected together. The first and third levers in the positions shown join the battery terminals Z and C through to MKZ and MKC, which are connected to Z and C of the key. In the other position (when the transmitter is started) the battery (at Z and C) is connected to the battery contact screws, thus forming the connections depicted in skeleton in the lower right-hand portion of Fig. 249. The second lever normally connects the down line, which has passed the galvanometer, through to K, which is in turn connected to the lower right terminal of the key. In the other position the down line is joined to the lower half of the divided lever. The up-line terminal of the transmitter U is connected to the left side of the key and U of the receiver or U-circle of the relay as the case may be. Comparison of Figs. 164 and 249 will show that when the transmitter is stopped the connections are practically those of the double current sounder save that a shunted condenser is included and a receiver substituted for the relay.

Connections of a Full Wheatstone Set. The connections of a full Wheatstone set are depicted in Fig. 250, and, with the aid of the above explanation, they should be sufficiently clear and easy to memorize.

The path of a received spacing current is from the down line through the galvanometer to D of the transmitter to K, to lower right terminal, and to centre of the key, through the shunted condenser and receiver, to the up line.

The transmitter currents are sent out between U and D of the transmitter, and, to make a mark, the positive pole of the battery is joined to D and the negative to U. The key currents should require no comment.

Here it will be well to state that the metal case of the transmitter is earthed so that, in the event of defective insulation, the telegraphist may not receive a shock by touching the frame. The earth connection

is made by means of an extra terminal added to the transmitter for this purpose.

It should be added that in the case of a long and difficult circuit worked towards the limit of its working speed, the Wheatstone receiver is generally worked from the local contacts of a " B " relay—80^{v} + and − are connected to *M* and *S* respectively, and a 4000$^{\omega}$

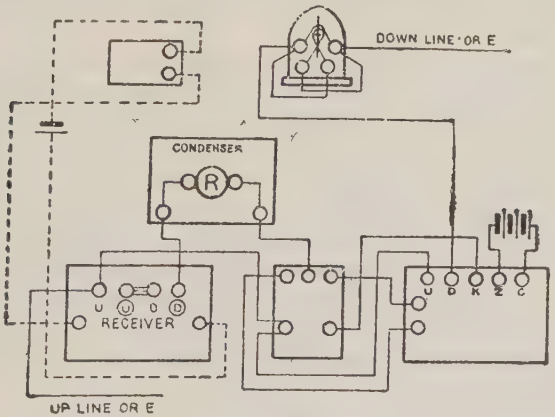

FIG. 250. WHEATSTONE SIMPLEX CONNECTION

resistance coil inserted between *T* and the earthed receiver. A relay will work at higher speed owing to its greater sensitivity than will a receiver.

At some newspaper offices two transmitters are provided and a change-over switch added so that in the event of a fault on one of them, Wheatstone working may not be suspended whilst the fault is being removed.

Adding a Transmitter to a Key-worked Circuit. In order to add a transmitter to a key-worked circuit to meet a temporary requirement, a transmitter stool should be obtained so as to avoid cutting the tables to receive the weight chains. The two wires upon *Z* and *C* of the key should be removed from their terminals and extended by pieces of wire respectively to *Z* and

C of the transmitter. *Z* and *C* of the key should then be connected to *MKZ* and *MKC*. The wire upon the lower right-hand terminal of the key should similarly be disconnected and then joined to *D* of the transmitter. *K* should then be connected to the lower right terminal of the key. Finally, *U* of the transmitter should be joined to the lower left terminal of the key, leaving the wire already upon that terminal in its position.

Substitution of a Receiver for a Relay. In substituting a receiver for a relay a similar procedure should be followed. If a spring receiver will not meet the case as regards the speed required a stool should be obtained in preference to cutting the tables for temporary requirements. It should be noted that the *U* terminal of the receiver is on the left, whilst on a relay it is on the right. This is of course due to the fact that in the former case the tongue normally lies over to the right. The wire on *U*-circle of the relay is joined to *U* of the receiver, and the *D* wire to *D*-circle. The local circuit is quite obvious.

LEAK WORKING

The London-Birmingham-Manchester-Liverpool News wire was formerly worked with a repeater in circuit at Birmingham, but it has been found to be possible to cut out this repeater by working the circuit on the leak system. All stations send + to line to mark and the *U*-circle terminals of all the relays are connected to line. The key switch at London is turned and all stations adjust the resistance in their shunted condensers so that a deflection of 35° is obtained. The capacity in the various condensers varies from $3\frac{1}{4}$ m.f. with 8000^{ω} in the rheostat at Birmingham to $10\frac{1}{2}$ m.f. with 7000^{ω} at Liverpool. These differences of capacity used are only significant in the light of the remarks on page 421 as to the variation in inductance between various relays of the same

design. The best value of capacity is found by observing the effects produced on the received signals.

The London transmitter sends out three times as much current as would be required for series working,

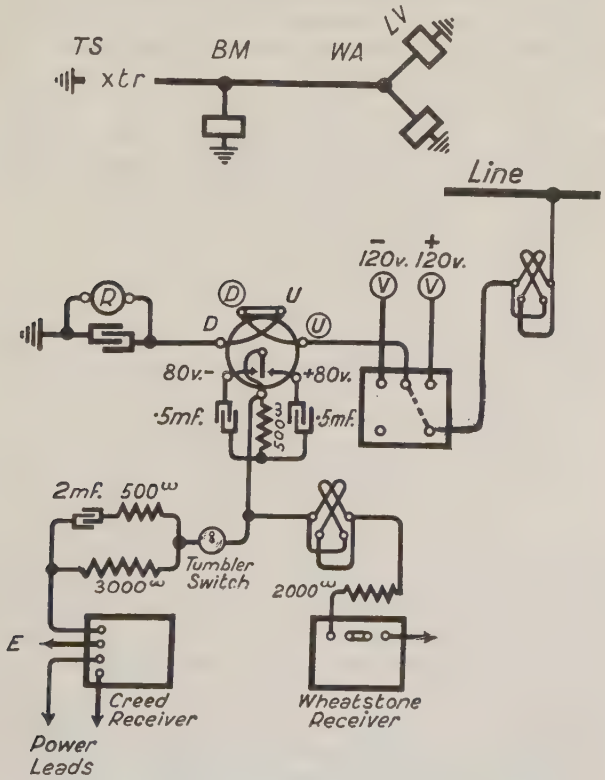

FIG. 251. LEAK WORKING WITH CREED PNEUMATIC RECEIVER

but it is found that the transmitter will readily do this without detriment to the contacts.

Fig. 251 shows the pneumatic power worked Creed apparatus in the local circuit of the line relay with

spark suppression circuits. The leak receiver is used only for observation purposes to check the incoming signals when difficulties arise.

THE WHEATSTONE DUPLEX

The Wheatstone system can be duplexed upon either the differential or bridge method, and the connections required in the former case may readily be deduced by comparing Figs. 164 and 250. There are, however, three points which require to be especially noticed. Firstly, a battery switch is provided for cutting out the battery and inserting a resistance equal to its internal

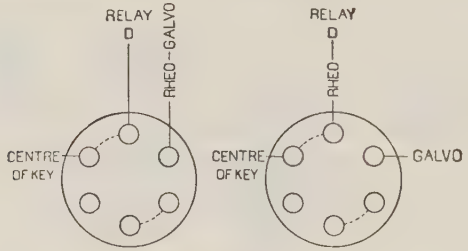

Fig. 252. Duplex Switch Connections.
Left for key, and right for Wheatstone, duplex circuits

resistance. The negative pole of the battery is connected to *Z* of the transmitter, and also to the left side of the battery resistance coils. The positive pole takes the right side of the two-way switch, the lever being joined to *C* of the transmitter. Secondly, the condenser and rheostat are in circuit at simplex, so that the arrangement may be used as a shunted condenser and so provide a higher working speed. This is effected by a slight alteration in the connections of the duplex switch. Referring back to Fig. 164 of the double current duplex connections it will be seen that *D* of the relay is joined to the top centre of the duplex switch, the upper left terminal of which goes to the key and the right to the rheostat. Now in order to have the condenser and rheostat in circuit for both

simplex and duplex, it is only necessary to join them between *D* of the relay and the centre terminal of the switch and take the right terminal direct to the galvanometer. The alteration necessary is shown in principle in Figs. 252. Thirdly, in order that the adjustment of the receiver may be the same for both duplex and simplex working a resistance coil is inserted between

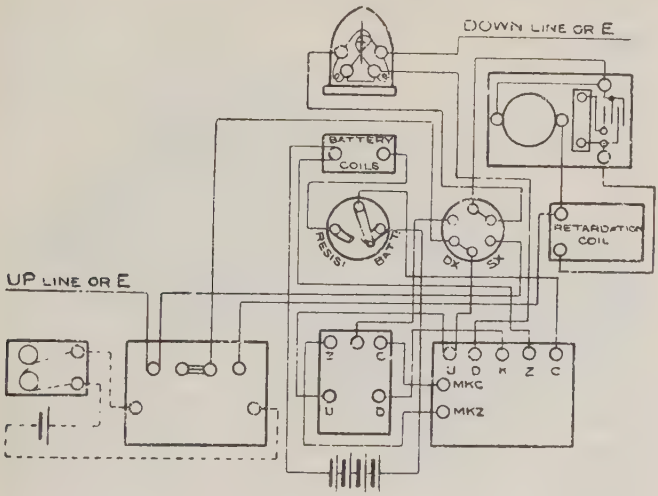

FIG. 253. CONNECTIONS OF A WHEATSTONE DUPLEX CIRCUIT

the *U* terminal of the receiver and the junction of the two wires connected to it. When the resistance of the line is 1000$^{\omega}$ or less, a 1000$^{\omega}$ resistance coil is used, but where the line resistance exceeds this amount, 2000$^{\omega}$ is inserted. It will therefore be seen that although the received current passes through both coils in series the resistance of the circuit is practically doubled, thus halving the current and so making its magnetic effect upon the receiver practically the same as in duplex working.

The connections of the receiver which replaces the

relay are quite obvious, and those of the transmitter are readily deduced from the simplex Wheatstone set already described. Transmitter *U* and the lower left terminal of the double current key are joined together at the lower centre terminal of the duplex switch. The galvanometer split wire comes to *D* of the transmitter and is normally passed on to the lower right terminal of the key via *K*. If the above explanations are clearly understood the connections of a Wheatstone duplex are as easy to remember as those of a double current duplex. The connections are shown in full in Fig. 253.

NEWS CIRCUITS AND BATTERY POWER REQUIRED

For " news " circuits a transmitter is required at the sending station, and receivers at the terminal and intermediate stations. In series working, the terminal station only is provided with a shunted condenser. In practice 120^{v} (secondary cells) or its equivalent in No. 1 cells is generally employed, and the resistance of the circuit is, if necessary, raised by the rheostat of the shunted condenser until the required current is obtained. The current required is 8 mA (20°) with the receiver coils in series or 16 mA (35°) if the coils are in parallel.

The reason for employing a minimum E.M.F. of 100 volts for operating Wheatstone circuits, both simplex and duplex, lies in the fact that with lower voltages the resistance of the contacts made by the divided lever of the transmitter have an abnormally high value, so reducing the current to too small a value for high speed working. There are, however, some few cases in practice in which only 80^{v} is used.

PART II. THE CREED-WHEATSTONE AUTOMATIC SYSTEM

The Creed Receiving Perforator. This machine (Fig. 254), officially designated Creed Receiver No. 1,

produces a perforated tape at the receiving end of the circuit precisely similar to the tape passed through the transmitter at the sending end. (The Creed Receiver No. 2 perforated a triple tape.) This received tape may be used either (1) to re-transmit the message by passing it through transmitters on other circuits, or (2) in conjunction with a Creed

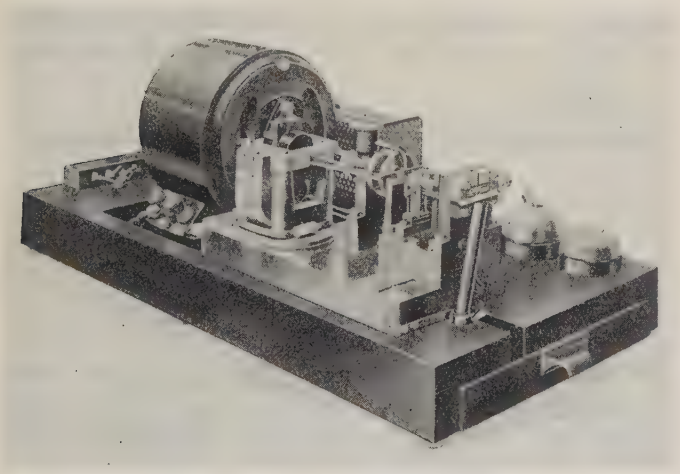

FIG. 254. CREED RECEIVING PERFORATOR (CREED RECEIVER No. 1)

printer, which will type the message in Roman characters on a tape, or for both purposes.

In the first form of receiving perforator,* now obsolescent, compressed air was used as the medium between the movement of a relay tongue and the mechanical work of perforation and feeding forward the punched tape.

The Creed electrical receiving perforator is driven by an electric motor, and the sole function of the relay

* Fully described in the fourth edition of this work. See also "The Creed Telegraph System," by E. Lack. *P.O.E.E. Journal*, Vol. VI, p. 249.

tongue is to act as a detent on one side or the other of a mechanism, according to the direction (space or mark) and duration of the received currents (dot or dash)—everything else is purely mechanical. The energy to run the motor is derived from the town mains. The power from the motor is applied to the punches through a friction clutch and escapement mechanism, controlled by a relay on the machine. The simplification as compared with the original compressed air model is remarkable, and the capital, maintenance,

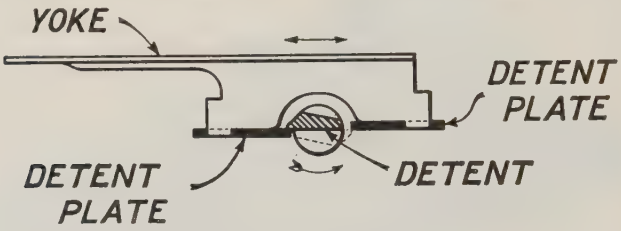

Fig. 255. Creed Escapement

and operating costs of the plant have been very materially reduced.

The receiver runs at a speed in approximate conformity with the transmitter lever, as in the Hughes instrument; a correction to secure accuracy of phase is applied each time a punch is operated. An escapement device and clutch permit the shaft, carrying the cams controlling correction and perforation, to revolve for half a revolution for each movement of the relay armature, i.e. from 9 to 3 o'clock for a space and 3 to 9 for a mark. When a dash is transmitted the spacing current half-revolution is delayed until the feed wheel has moved the tape to the extent of one feed-hole.

The clutch shaft spur wheel is driven from the main shaft spur wheel. A simple adjustable friction clutch is fixed to the clutch shaft, and one plate of this clutch rotates with the shaft carrying the correcting and punching cams. Between the clutch plate and the

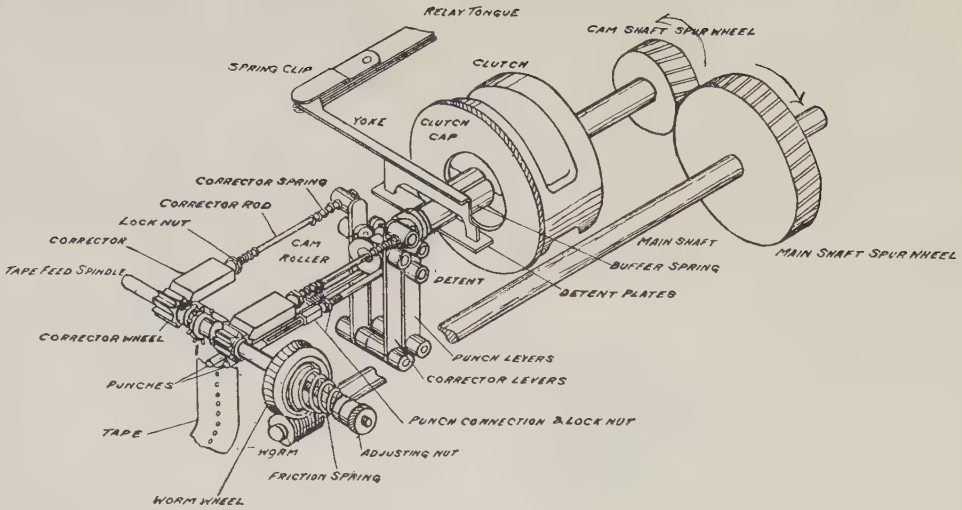

FIG. 256. DIAGRAM OF CREED RECEIVING PERFORATOR

cams on the same shaft is a detent, the movements of which are controlled from the arm of the receiving relay via the yoke piece and detent plates. These detent plates permit the cam to revolve in one direction for one half-revolution at a time, the inner edge of either detent plate being advanced to engage the detent and hold it, thus causing the plates of the friction clutch to slip. This it continues to do until the current reverses in the relay, and the armature moves over to the opposite pole, carrying with it the yoke piece and permitting the detent and cam to make another half-revolution. Hence, any irregularities imparted to the movements of the relay armature will be communicated in turn to the yoke piece and detent plates, thus setting up corresponding irregularities in the sequence of half-revolutions.

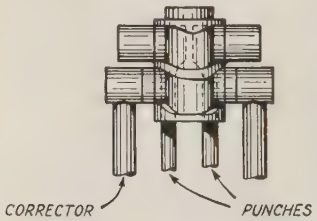

Fig. 257. Corrector and Punch Cams

The cam which turns with the detent is double grooved; the front groove controlling the movements of the corrector rods and the rear groove controlling the movements of the punches.

Before the tape can be punched, it is necessary that its forward feeding motion should be momentarily arrested to avoid tearing.

To effect this, the cam grooves are designed to admit of the corrector rod being advanced into engagement with the corresponding corrector wheel before the punch *M* or *S* touches the paper, and to remain in engagement until the punch is cleared.

In the case of the "dot," the armature is attracted to the opposite pole, carrying with it the yoke and detent plates, thus releasing the detent and cam for one half-revolution and recording the marking perforation in the tape; when the marking impulse ceases

the armature and detent plates are returned by the spacing impulse, the second half-revolution takes place and records the spacing perforation on the slip.

In the case of the " dash," the armature is attracted and held for a longer period, during which time the centre-holed slip is feeding forward ; consequently, assuming the speed of the slip to be in correct ratio to the signalling speed, the spacing perforation recorded on the return of the armature will be correctly punched opposite the next centre-hole to that facing the marking perforation.

The tape-feed spindle is made to revolve in correct ratio to the clutch shaft by means of gears and main driving shaft and worm gear.

A small adjustable friction clutch situated in the worm wheel is caused to slip when a corrector rod engages a corrector wheel and stops the feed.

Accurate synchronism between the Wheatstone transmitter and the new receiver is not absolutely necessary. So long as the detent and cam are revolved at a speed which admits of two successive half-revolutions being completed somewhere within a period equivalent to that of a complete " reversal," the conditions for accurate reception up to a speed of about 170 words per minute may be said to exist. It is necessary for the centre-hole in the tape to be as near as possible in line with the corrector rod at the moment of engagement. An error of 20 per cent is, however, permissible, and this is taken up by the corrector rod sliding down the face of the V-groove in the corrector wheel and " correcting " it either forward or backward.

Receiver Adjustments. It is desirable that the line relay should not have too large a travel, as a high transit time will tend to make the receiver relay sluggish.

Before starting the receiver it is necessary that the lubricator which supplies oil to the clutch and detent mechanism should be filled with thin Rangoon oil.

The cams, bearings, correctors, etc., should also be lightly lubricated with the same oil.

Speed Adjustment. When working at low speeds, the receiver should run about 5 per cent faster than the transmitter.

Working at higher speeds, good results are obtained by running 5 to 10 per cent faster than the transmitter.

The sliding rheostat fitted to the base is connected in the field or shunt circuit of the motor, so that if the knob of the slider is pulled forwards, the resistance of the field will be increased and the speed raised.

To get the speed of the receiver equal to the speed of the transmitter, ask the distant station to run his transmitter and put through at intervals 12 in. of blank slip (the bases upon which Creed receivers and printers are fitted are 12 in. wide).

When the transmitter is running without tape, reversals of current are sent to line, and the receiver will perforate a regular series of dots, but when the 12 in. of blank tape is inserted, the sequence of reversals is interrupted, and a length of blank will appear in the tape issuing from the receiver. This blank should measure 13 in. in length.

If less than 13 in. the receiver is running too slow, and the motor speed must be increased by altering the resistance until the blank is of the required length. If more than 13 in. the motor speed should be reduced by the same means.

It is possible to adjust the speed while the line is being worked by altering the rheostat or slider until the correct spacing appears between the letters and words on the punched tape.

If spaces are lost between words, causing them to run together, the receiver is running too slowly. If spaces are gained between words, or words become split up, the receiver is running too fast.

To ascertain the line speed, get the distant station to run reversals. Then measure the number of inches of punched tape issuing from the receiver in an interval of 10 seconds. As one foot of perforated tape is equal to five words, the *speed* in words, per minute is obtained by multiplying the *number of inches* of tape issuing *per second* by 25.

Connections. The internal connections of the Creed Receiver No. 1 are shown on the right in Fig. 258. The double lever switch has four positions, in the last of which the power relay is connected. The left side of the switch is a simple two-way bar switch, and the other, a starting switch for the motor by means of which the slide resistance is first inserted in the

armature of the motor, then short circuited as the switch arm bridges the second and third contacts, and finally put into the field circuit. The last two studs are joined together to ensure that the motor has reached its top speed before the line circuit is closed and the detent released by the relay.

The Creed receiver is worked off the tongue of the line relay on a Wheatstone set. This relay may be either a Post Office standard or a G-relay, as the case may be. The tongue is taken to a test jack where it is connected to the Creed apparatus by a plug and cord. The object of this arrangement is to give greater flexibility for meeting traffic conditions. In the C.T.O. these jacks are placed on divisional test boards.

A polarized sounder is added for the reception of any keyed instructions or statements, but it is of vital importance to prevent any such signals from passing into the Creed receiver, since being of widely different speed and necessarily somewhat irregular, the receiver would be improperly operated, with very great risk of damage to the type head of the printer.

A standard " B " relay, with its coils in parallel shunted by a condenser and a 4000^{w} resistance, is used to supply the signals to the Creed. The power may be taken from the direct current electric light mains, which are bridged by two lamps, thus forming a potentiometer with 50^{v} positive and negative, with respect to the centre tapping. These + and − powers are each taken through a lamp to *S* and *M* of the relay. Hence, between *T* and the centre of the lamp potentiometer there are 50^{v} positive or negative according to the position of *T* on *S* or *M*. These voltages, in accordance with the received signals, pass through the power relay on the receiver, the arm of which mechanically controls the functioning of the apparatus.

The power relay is only different from the high sensitivity Creed relay in that it has a relatively massive armature extension, and is provided with a heavy

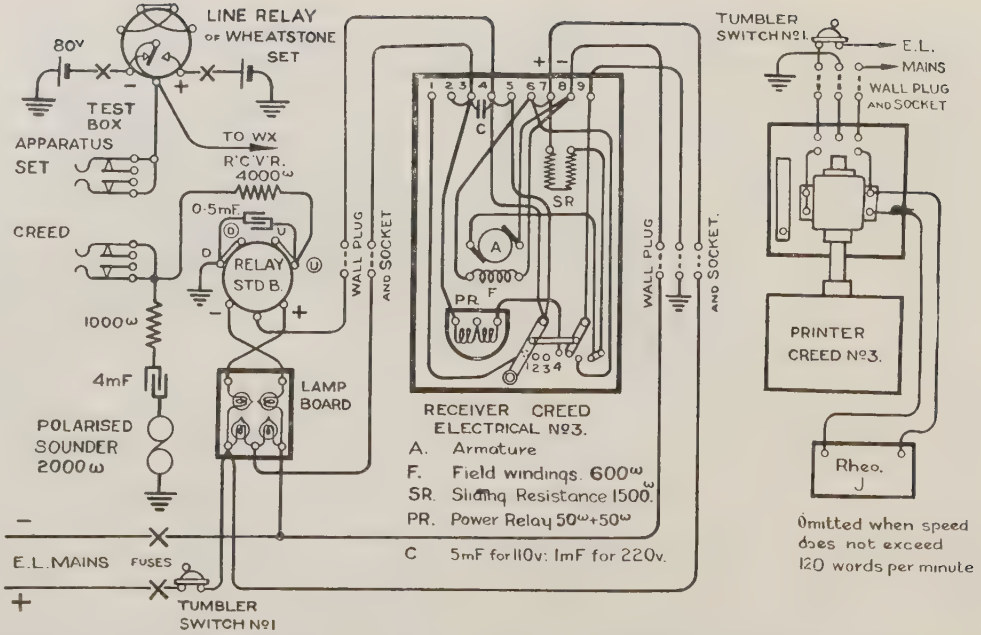

FIG. 258. CONNECTIONS OF CREED WHEATSTONE SET

operating current, together with an increased polarizing flux, to provide adequate energy for the mechanical work which it performs.

The remaining details of the arrangements will be clear from Fig. 258.

The connections of the printer call for little comment, since the connection of the motor to the power mains is all that is involved. The power mains pass through

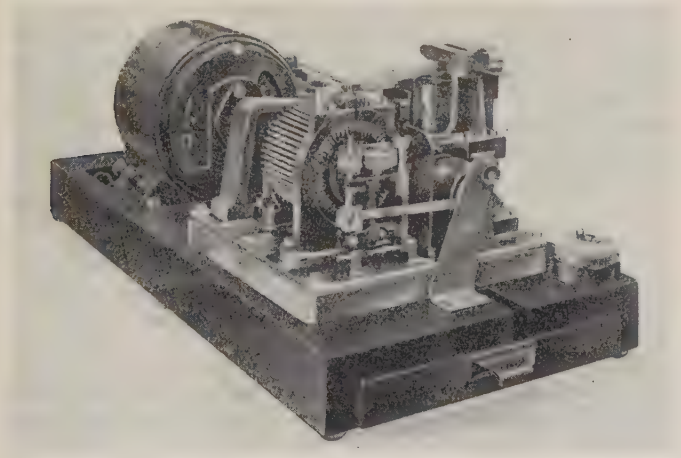

Fig. 259. Creed Printer

a tumbler switch to a plug and socket, which also has an earth connection for earthing the frame of the printer to avoid the possibility that it might become live and give electric shocks. The plug and socket connections used both on the receiver and printer provide facility for immediate replacement of the apparatus for overhaul or in case of fault.

It should be noted that the resistance on the perforator is in series with the field of the motor, and on the printer it is in the main circuit.

THE CREED PRINTER

The latest type of printer, Fig. 259, officially termed

Creed Printer No. 1, is driven by an electric motor. The use of compressed air which characterized the original printer has been abandoned. The longest character is the figure 0, which occupies ten centre holes on the punched tape, consequently ten pairs of selecting needles are required and the length of tape presented to and under the needles must also be equal to ten centre holes (Fig. 260). It will, however, be appreciated that the figure 0 contains the elements of five different letters, T, M, O, Ch (not used), and the figure 0. This difficulty is met by clearing away all notches on the discs behind those necessary to the particular combination, with its following space. The notching on the ten pairs of *S* and *M* discs can readily

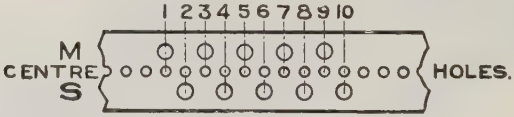

Fig. 260. Perforations for Longest Character

be worked out, and it will suffice to say that for each of the 53 characters there is one position and one position only, in which slots appear under the particular character represented by the holes on the perforated tape.

The letter E requires a movement of the tape by one centre hole, whereas 0 requires a feed of 10 holes. This is accomplished by feed control stops, which are placed in the path of the feed lever in accordance with the position in which neither the *S* nor the *M* selector of a pair is moved. The force necessary to produce a feed of 10 holes is applied via a leaf spring, the play of which is limited, as explained.

The received perforated tape is passed into the printer (Fig. 261); while the tape on which the printing takes place is drawn round a rubber-faced platen. The perforated tape is fed forward letter by letter in a

guide-way over the series of 10 pairs of selecting needles or selectors (a pair of which is shown).

Each selector is mechanically connected to a combination disc or comb as it is generally termed, through the medium of an actuating lever. The 20 combination combs are mounted side by side on a drum or body, on which each comb may be turned in one direction

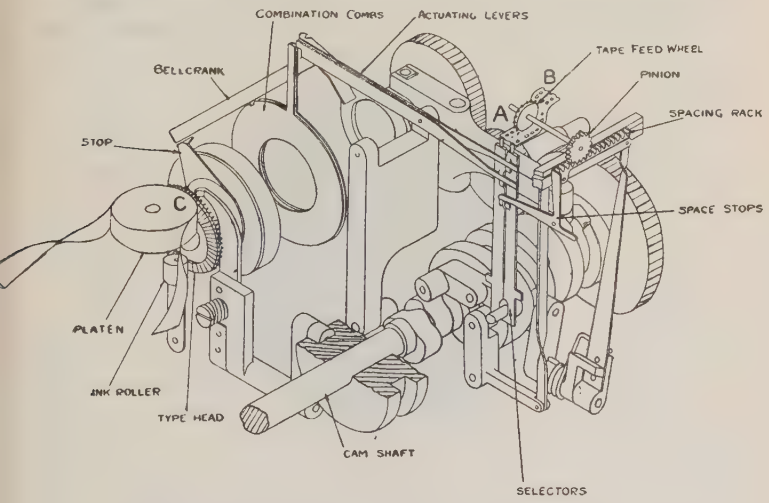

FIG. 261. DIAGRAM OF CREED MORSE PRINTER

only through a fraction of an inch, when its corresponding selecting needle moves through a hole in the perforated tape.

Each of the 20 combination combs is slotted on its edge with a different arrangement of slots, and occupies two positions only—normal and moved. These slots are so arranged that for any combination of normal and moved positions of the 20 combs there is one place, and only one place, around the discs where the whole 20 discs open a longitudinal slot and permit the particular spring controlled latch or bell crank to drop into the opened slot.

There is a latch for each character on the type head, and the particular type corresponding to the Morse character under the selecting needles is represented by the dropping of the particular latch into the uninterrupted series of slots across the combs.

A continuously revolving spindle passes through the axis of the drum and rotates the type head through a friction clutch. When the selected combs open a longitudinal slot for the full length of the combs and

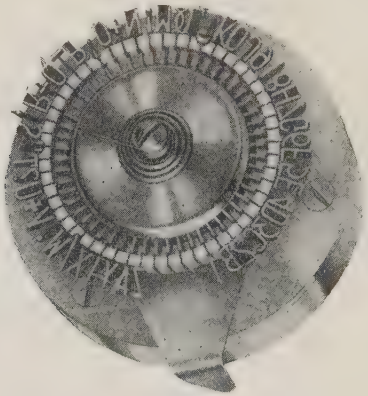

Fig. 262. Type Head

admit a " bell crank," the outer end of this bell crank falls into the path of the stop lever rotating with the type head. The stop lever in this position momentarily arrests the rotating type head and causes the clutch to slip.

The type faces (Fig. 262) are fixed on the ends of very short radial typebars, and are held in their normal position by a disc pressed against them by a spring.

A cam on the main shaft is timed to actuate a " hammer " when the type head ceases to revolve, and thus causes it to strike the back of that particular type directly opposite the paper tape and so to print the selected character.

There are 53 bell cranks occupying 53 radial positions round the circumference of the 20 combs, and similarly there are 53 typebars radially distributed round the type head, each one of which can be stopped opposite the paper by causing its particular bell crank to project and to arrest the stop lever.

After the operations of selecting and printing are completed, the bell cranks are restored by a suitable cam motion, and the stop lever and type head continue to revolve until the next letter is selected.

The perforated tape is fed forward by a star-wheel fitted on a small spindle carrying a toothed wheel, which is rotated as required by the movement of a cam controlled rack. This rack is given a forward movement for feeding purposes, but is disengaged from the toothed wheel on its return, so that the tape is always fed in one direction.

The extent of the forward movement of the rack is limited by the distance to the first space signal, that is to say, the length of a letter. To provide for this limit there is a group of 10 space levers or "space stops," normally in the path of the rack, and preventing its backward movement. Each space stop is also in the path of one pair of selectors, and when either needle of a pair passes through a perforation in the tape, the corresponding space stop is moved out of the path of the rack. Hence, with any letter or figure of the Morse code, there is a clear backward path for the feed rack until it reaches a space signal, i.e. a portion of the perforated tape bearing centre holes only, in which case the space stop is not moved. It will thus be seen that the length of the forward movement is controlled by the distance the rack travelled back to the first unmoved space stop. The 10 pairs of selectors are moved in a downward direction with every revolution of the cam shaft by means of a returning bar, and are then released and allowed to rise to the paper under the action of small spiral springs (not shown). Consequently,

those selectors which correspond to the perforated signal presented by the tape, are permitted to pass through the holes and to complete their maximum movement, the remainder being held back against their springs by the paper and thus prevented from moving the combination combs.

The types are inked by a small ink-roller vertically

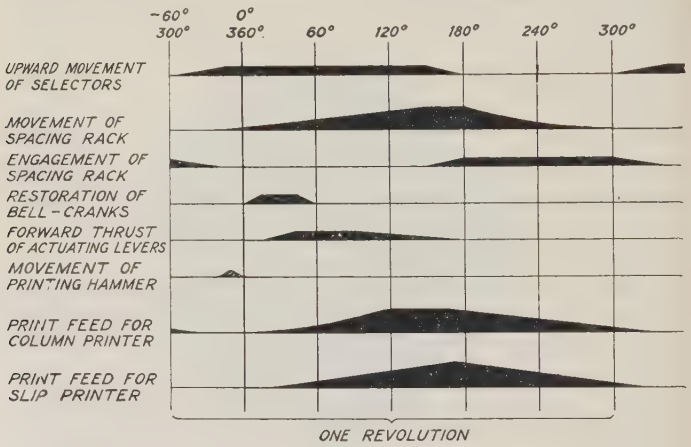

Fig. 263. Cam Shaft Chart

mounted on an adjustable pin, and caused to revolve by the motion of the type head itself.

The cam shaft diagram (Fig. 263) will serve to correlate the sequence of operations described. They can be divided into two groups, selection and printing, both starting from a common source, i.e. perforated tape.

It will be realized that there can be no sharp dividing line between successive cycles, but the chart has been so arranged that the normal sequence in one revolution can be easily followed. For the purpose of clarity the revolution has been shown to commence 60 degrees before zero, thus making it possible to show the whole

movement of the selectors. The zero line is purely a theoretical one, determined in the original design of the machine, but it will be understood that, provided a complete revolution of 360 degrees is considered, it may commence at any part of the revolution.

On studying the chart, one sees that the first cam operates the selectors, which rise and enter the holes in the tape according to the combination. As can be seen from the darkened portion of the curve, the selectors rise fully just before the zero mark is reached, and remain operative for nearly half a revolution. This movement will be reproduced again exactly 360 degrees later. Meanwhile, however, the upward motion of the selectors has set the necessary combination, and at the moment they have risen to their fullest extent the spacing rack begins to move forward. This motion continues until the rack is arrested by a space stop, the excess motion of the cam being absorbed by the flexion of the space lever. The space lever reaches the limit of its motion at the instant the selectors commence to retract, and at the same instant the spacing rack begins to move upward to engage with the feed wheel. The rack remains stationary until it is fully engaged, and by that time the selectors are fully retracted, whereupon its return stroke commences, thus moving the tape to the next letter. This completes the selection and feeding of the tape, but whilst these operations are in progress, translation and printing of the characters is taking place. The upward motion of the selectors causes the appropriate actuating levers to move into engagement with their corresponding comb extensions. Thus, as the actuating levers are thrust forward, the bell cranks are lifted and the combs are set to the selected combination. The bell cranks drop, and the selected one arrests the type head at the desired position for printing. The combs remain set until restoration takes place in the early part of the following revolution, but the actuating levers return with the

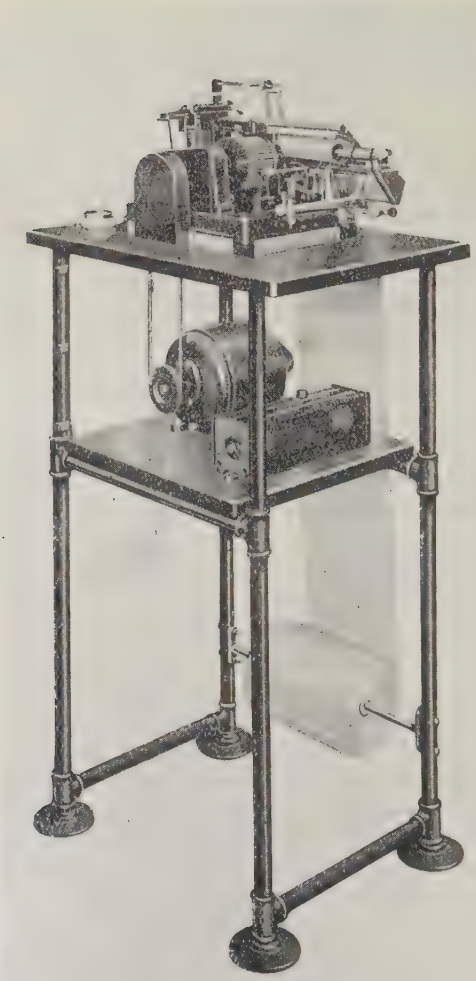

Fig. 264. Creed Morse Column Printer

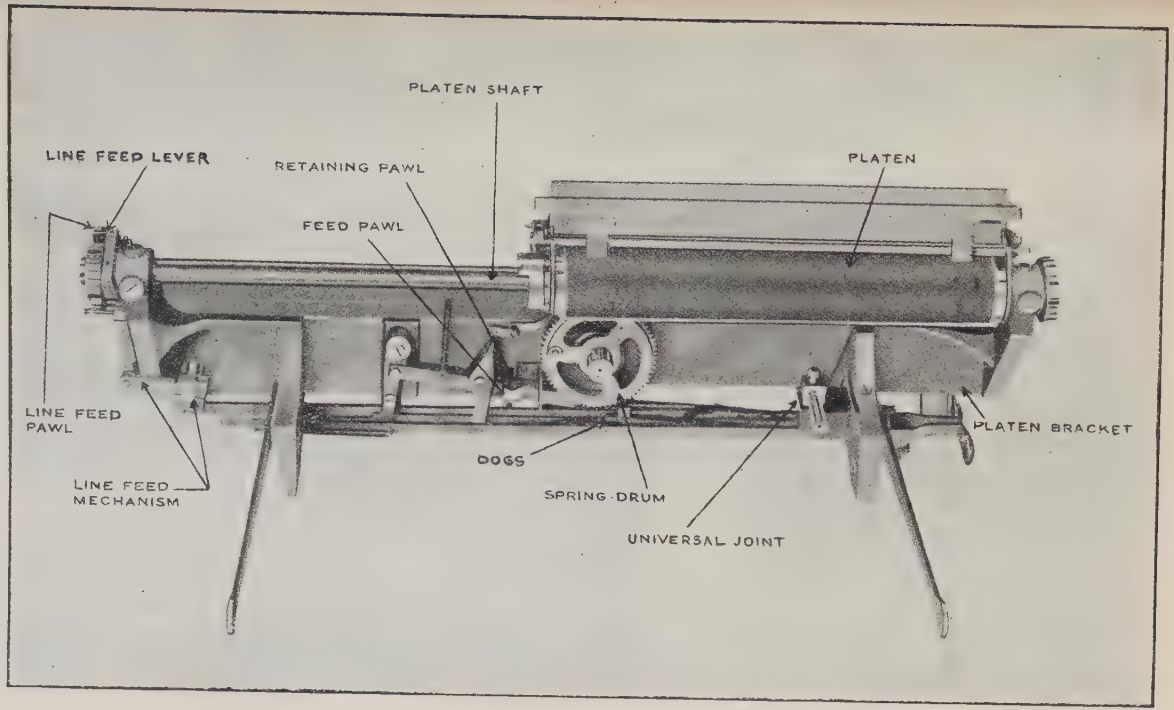

FIG. 265. PAPER CARRIAGE

selectors. At this point the tape is fed forward ready for printing, as indicated in the lower curves, and printing takes place at the end of the revolution, as the next selection is being made.

Adjustment and Operation. The periodical overhaul of the printer requires the services of a skilled mechanic, but there are two adjustments which may be made by the operator. The bell crank lifting collar is designed to raise the bell cranks off the combs when the latter are returned to normal by the comb returning pins. The amount of lift is adjustable by the knurled bell crank lifting adjusting nut situated behind the printer body. When adjusted, this nut should be locked by the set screw provided in the collar. If the bell cranks are not lifted sufficiently by the collar, the combs will not return to normal ; on the other hand, if they are lifted too much, the selected bell crank will not drop low enough to arrest the type head stop.

The type hammer should be adjusted so as to clear the type. If it is too far forward it will continually rub against the type and cause blurred printing. If too far back from the type it will fail to push them forward sufficiently to print well. This adjustment, which is effected by means of the set screw in this hammer, should be sufficient to produce a clear impression. After adjustment the locking nut should be tightened.

In general, adequate but not excessive lubrication should be secured, and special care should be taken to see that the clutch does not run dry.

The feed lever link should be lifted before the printing head is lowered, so as to avoid bending the link when replacing an ink roller. Before pulling out the tape it is essential that all the selectors should be down, so as to avoid the possibility of bending them. To feed in the punched tape, push the non-stop check lever in with the left hand to hold down the selectors. Next, feed the tape along the guide plate with the right hand until it engages with the tape feed sprocket wheel. Then release the non-stop check lever.

The Creed Morse Column Printer. This machine (Figs. 264 and 265) is a development of the tape printer, having in place of the usual platen used for tape printing, a typewriter platen mounted on a suitable carriage, the description together with the mechanical movements of which are detailed in Chapter XVI.

PART III. THE SIEMENS-HALSKE HIGH-SPEED AUTOMATIC PRINTING TELEGRAPH*

This system may be described as a single channel modified Baudot working automatically at high speed. The five-unit alphabet is adopted, but the arrangement of the characters differs both from the Baudot and Murray. Keyboard perforators are employed to prepare the slip, which is passed through a transmitter. At the receiving end the message is printed directly in Roman characters on a slip at a maximum speed of 170 words per minute. A perforated tape corresponding with the transmitting tape can also simultaneously be obtained, if required, by making certain connections to the ordinary Siemens Keyboard Perforator with the aid of a plug and cord provided for the purpose.

In comparison with Creed, the operation of running a received perforated tape through a printer is saved.

The outstanding points in the design of the system are—

1. The use of the five-unit alphabet.

2. The general employment of condenser impulses to effect the various functions, contacts being broken when no current is passing.

3. The replacement of mechanical functions by electrical means. The signals are translated into printed characters with the aid of an electrical combiner and relays.

4. The use of two groups of receiving relays, so that whilst the relays of one group are being set up to form a given combination, the other group is directing the printing operation of the last letter transmitted.

5. The generation of the synchronizing effect locally from the received signals themselves.

Note.—Whilst it is convenient to group together all the high-speed automatic systems, the reader is advised to study this section after, and not before, Chapters XV and XVI.

* This description has been abstracted from *Electricity*, 23rd January, 1914; 30th January, 1914; 6th February, 1914; and

Keyboard Perforator. The tape is cross perforated, and each outer edge bears a row of guide-holes like a cinematograph film. Each of the five punches is operated by an electro-magnet, and a sixth electro-magnet controls the movement of the slip after the perforation. Five contact-bars, 1 to 5, are placed beneath the key-levers, and to each key is fixed a metal

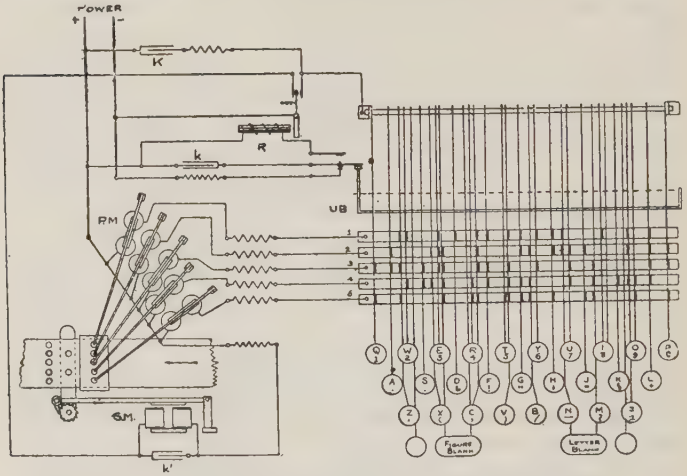

Fig. 266. Connections of Keyboard Perforator

comb, bearing one or more tee h according to the combination represented by the key-lever to which it is attached. Connected to the five bars are five punching electro-magnets *PM*, and a spacing-magnet *SM* (Fig. 266). Underneath the key-levers is a universal bar *UB*, which is actuated directly a key is depressed. In the normal position a condenser *k* is across the power mains through resistance, and is charged. When the universal bar is depressed it breaks the charging circuit and connects the charged condenser across the coils of the relay *R*. The armature of this relay is

13th February, 1914. The articles were translated from the German, and the diagrams re-drawn by H. H. Harrison.

momentarily attracted, and closes the circuit through the punching-magnets corresponding to the particular key depressed. Thus, the duration of the closure of the magnet circuits depends only upon the time of the discharge of the condenser, and is independent of the duration of the depression of the key. It will also be observed that the only point at which connections are

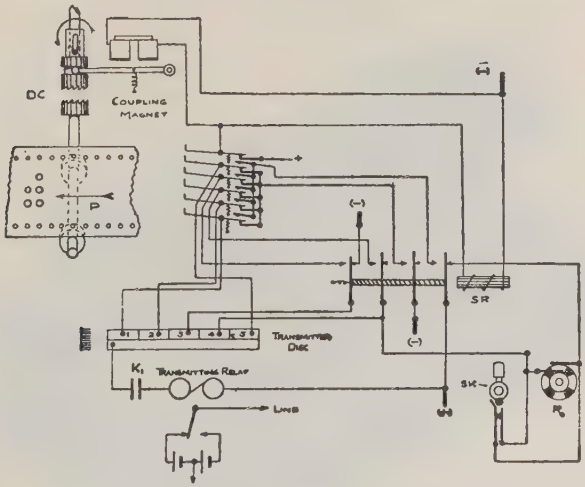

FIG. 267. ARRANGEMENT OF SIEMENS TRANSMITTER

made and broken whilst current flows are at the local contacts of the relay "R." On the return of the armature the power circuit is closed through the spacing-magnet *SM*, and the paper is fed forward one space.

The Transmitter. The tape is drawn through the transmitter by two star wheels, which engage the two rows of feed-holes at its edges. The wheels are driven by an electric motor through a clutch *DC* (Fig. 267).

Five of the transmitter levers, which are in reality double current keys, engage with the combinations of

the five transverse punchings in the slip, whilst the sixth lever is used as explained later.

The six keys are shown to the right of the tape, and when not controlled by the tape rest on their lower contact stops. The sixth and top lever of the series, when in the position shown, actuates the coupling magnet, and the clutch *DC* is withdrawn from the transmitter

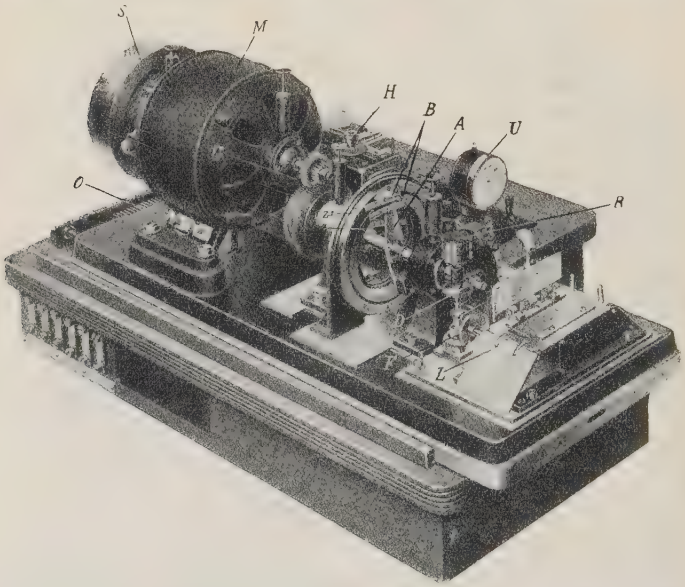

Fig. 268. View of Transmitter

driving-shaft, thus stopping it. The circuit is also closed through the switching relay *SR*, which pulls up its four armatures on to their front contacts as shown in the diagram. Negative power is, by this means, removed from the bottom contacts on which the five signalling keys are resting, and is applied to segment No. 3 of the transmitting collector or disc, which is shown developed for the sake of clearness. The transmitting relay is actuated sending a positive current to

line, the discharging current through K_1 effecting this When the trailer reaches segment 4, the condenser has a charging path formed, and the relay now sends negative current to line.

These two currents, sent automatically at each revolution of the trailer, are for the purpose of maintaining the distant receiving distributor in synchronism. They cease directly punched paper is inserted in the transmitter, as the synchronizing effect at the far end is then generated by the received signals without any expenditure of line time.

The Switch key *SK* is for stopping the distant station by giving him a stop signal, which rings a bell. *SK* breaks the short circuit round the commutator *R*, which rotates once for every twenty-four revolutions of the trailer. From segment 3 a marking current is sent out every revolution, but the immediately following spacing-current is only sent out when the circuit is completed through *R*. Thus the series sent out is "e," "stop signal" and "letter space," with several spaces in between.

The Receiver. Fig. 269 shows the elements of the receiving apparatus, which consists of a Baudot electrical combiner, having five crowns. The type-wheel combiner brushes and receiving brush are all mounted on a common motor-driven shaft *vide*, Fig. 270, which is a general view of the complete receiver. Two groups, each of five receiving relays, are arranged so that during one revolution one group of relays is set in accordance with the combination received from the distant station, while the other group of relays is effecting the printing of the letter previously transmitted. The necessary switches, to the number of ten, are in the form of two segment commutators, and arranged on a common shaft geared to make one revolution for two revolutions of the main shaft.

The relay tongues are shown separately from their coils and are placed immediately to the right of the

combiner crowns. The printing of the letter is accomplished as follows—

During a revolution the corresponding combination is received in the coils of one group of the receiving relays, and their armatures are set accordingly. Being polarized relays set neutral the tongues remain in the

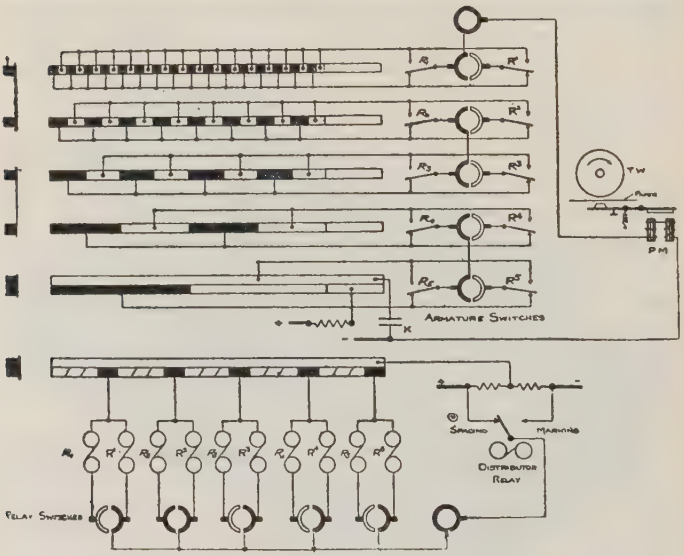

FIG. 269. ARRANGEMENT OF ELECTRICAL COMBINER AND RELAYS

position they are last placed, and the signal is stored. At the end of the revolution the group of relays is switched out, and the second group put in circuit. The relay tongues are switched in circuit simultaneously with the switching out of the group of relays to which they belong, while the tongues of the group of relays now being actuated are set, but are out of the printing circuit. The combiner brushes now move from the combiner segments, and when the combination previously set is reached the printing-magnet is actuated.

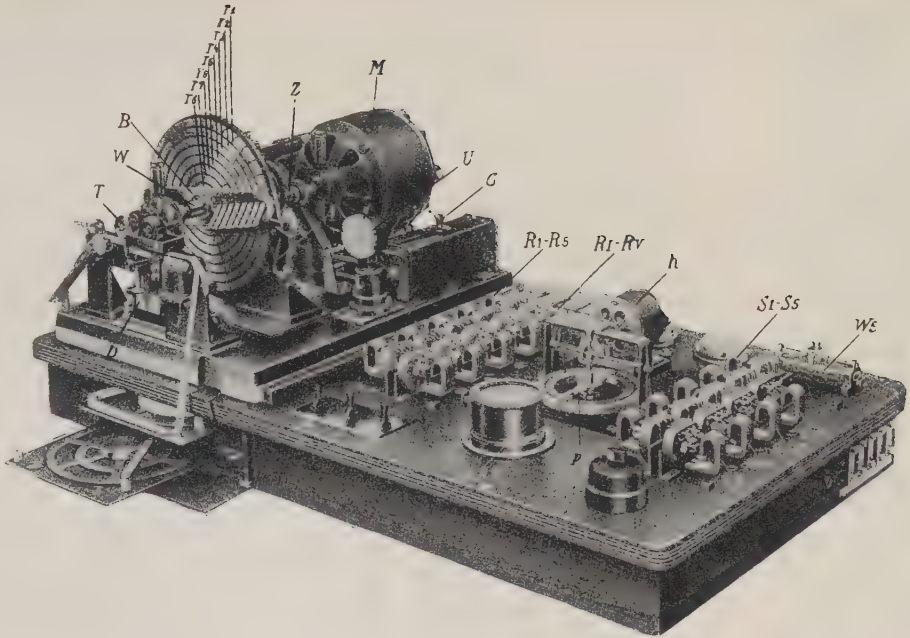

FIG. 270. VIEW OF RECEIVER WITH COVERS REMOVED

During this revolution the letter next to be printed is being set up. The printing-magnet is actuated by a condenser impulse in the following manner—

A portion of the distributor combiner is reserved for putting the condenser across the power mains through the action of the fifth brush, and as shown at the right-hand end of the fifth crown. Thus, at the commence-

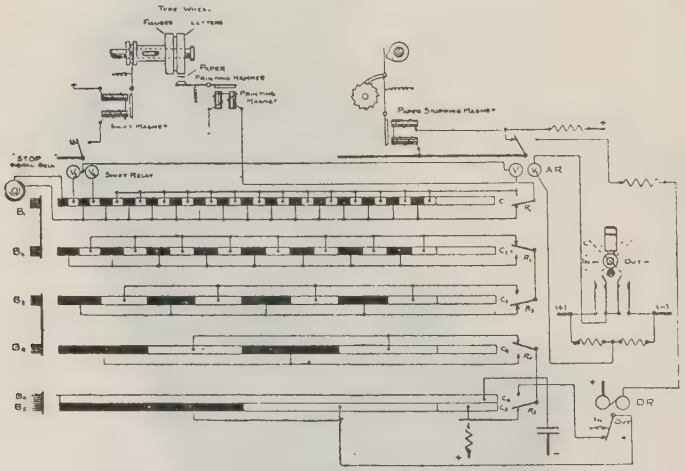

Fig. 271. Electric Combiner and Printing Arrangement

ment of each revolution, this condenser is fully charged, and is ready to discharge through the printing-magnet when the required combination is found. The printing-magnet is therefore promptly energized.

Figure 271, which for simplicity shows only one set of relay tongues, illustrates how the various functions are carried out at the receiving end. The paper feed is accomplished by a cam mounted on the main shaft. The change from letters to figures is by a lateral movement of the double type-wheel. The motion of the paper can be stopped by moving the switch-key, which

withdraws the upper end of the armature of the paper-stopping magnet from the letter-spacing cam. At the same time relay *DR* is actuated, and its tongue, moving to the left, insulates the second segment of the fifth crown.

The first " blank " signal sent from the distant station

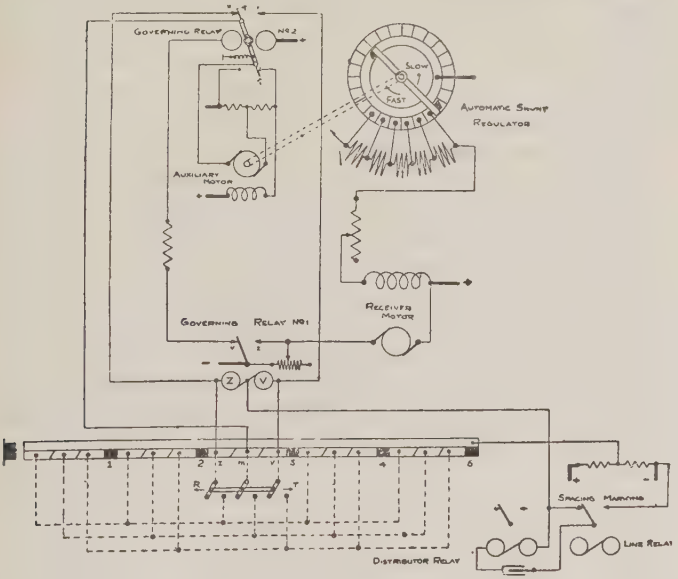

FIG. 272. SYNCHRONIZING ARRANGEMENTS

will set the paper in motion again by resetting *AR* and *DR*.

Synchronizing Arrangements. Between each of the shortened signal segments 1, 2, 3, 4 and 5 of the receiving distributor, five groups of three correcting segments are placed (Fig. 272).

Assume that the unison signal is sent from the distant transmitting station, each signal consists of the elements — — + — —. If the synchronism is perfect the brush is on the middle segment in between each

signalling current, and on V or Z when a lag or lead takes place. If the brush comes on segment V current flows through coil V of the governing relay No. 1, and the armature is put against contact V, thus putting the adjustable resistance in series with the receiver motor armature. This resistance is short-circuited if the brush lags behind on segment Z. If segment M were isolated the acceleration or retardation would last too long, and great variations of speed would result. It is arranged, therefore, that M is put in connection alternately with V and Z by means of the relay tongue, r, and the governing relay No. 2, so that the armature resistance is switched in and out of circuit, so long as synchronism is maintained. Large variations in speed are corrected with the aid of a small auxiliary motor, which varies the resistance in the field magnet circuit of the receiver motor. Normally the armature of governing relay No. 2 oscillates between its lower contacts, and when, owing to a considerable change in speed it remains on one contact or the other, the auxiliary motor revolves until the armature of the relay again oscillates.

CHAPTER XIII

THE BRIDGE DUPLEX

The Bridge duplex system is invariably used for Wheatstone working on long cable circuits having large capacity. On such circuits, it gives a higher speed of working than the differential system. For even the longest aerial lines it has absolutely no advantage over the differential system, but on the contrary entails the use of larger battery power.

Advantages of the System.

1. Its principal advantage lies in the fact that the strength of the received current through the actual receiving apparatus can be regulated quite independently of the sending station, hence very sensitive adjustments are possible. The adjustments are, however, somewhat critical, but result in a higher speed than with the differential system.

2. Owing to the very high resistance of the circuit, the effects of earth currents and the background of inductive disturbances are less felt.

3. The apparatus need not be differentially wound.

The advantages gained under headings 1 and 2 result in a considerable increase in the speed of working, but at the expense of increased battery power. That claimed under heading 3 is of little value since most relays are differentially wound. The second point will be apparent when it is remembered that the resistance of the circuit as a whole is very high, and that only a portion of the line current passes through the receiver.

General Principle. After the detailed consideration accorded to the differential duplex but little difficulty will be found in dealing with the bridge duplex. The differential system consists in splitting the sending current through the two coils of a differentially wound

relay, the effects produced being the result of disturbances of the balance of current in the two coils. In the bridge system the current divides through two resistance coils to the line and compensation circuits between which the receiving apparatus is placed. If the ends of the two resistance coils are at the same potential no current will flow through the receiver. Hence it is usual to say that the differential system depends upon a

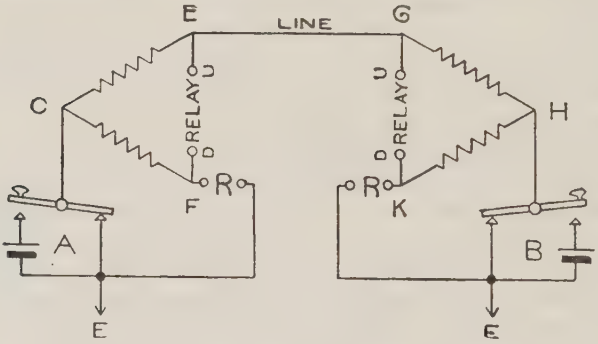

Fig. 273. Principle of Bridge Duplex

balance of currents and that the bridge system in contradistinction depends upon a balance of potentials.

The connections depicted in Fig. 273 illustrate the fundamental principle of this system as compared with the differential duplex (see Fig. 149).

CE and *CF* are two equal resistances, between which the receiving apparatus is connected. *R* represents a resistance equal to that of the line *plus* the resistance of the distant apparatus. The connections at both ends are identical, *GH* and *HK* corresponding to *CE* and *CF*.

If the key at *A* is depressed, the current divides equally between *CE* and *CF* because the resistance of *R* is equal to that of the line and *B*'s apparatus. Since the resistances of *CE* and *CF* are equal, the differences of potential between *C* and *E* and between *C* and *F*

are equal, consequently, when only one key is depressed, no current flows through the relay, and the sender's signals do not therefore affect his apparatus.

The path of the compensation current is from the positive pole of the battery to *C* along *CF* through the rheostat back to the negative pole of the battery. The line current flows from the positive pole of the battery through *CE* along the line to *G*. At this point the current divides, one portion passing through the relay in the direction *U* to *D* and along *KH* to *H*, and the other along *GH* to *H*, where the two parts reunite and pass through the back contact of the key to earth and thence to the negative pole of the *A* battery. The mark is produced by that portion of the current which passes through the relay. The rheostat circuit may in this instance be regarded as a high resistance shunt across *KH*, which therefore somewhat reduces the resistance between *K* and *H*. The main path of the received current is along *GH* with the relay and the joint resistance between *K* and *H* placed in series across *GH*. The current through the relay is therefore rather less than half of that arriving at *G*.

If the key at *B* is depressed instead of that at *A* the current divides equally between *HG* and *HK*, so producing equal potentials at *G* and *K*. The line current passes to *E*, along *EC* and the path in parallel with it (*EFC*), to earth, and so back to the battery at *B*. The path in parallel with *EC* is the relay in series with the combined resistances of *CF* and *R*.

When both keys are simultaneously depressed the batteries oppose each other in the line and the current at *A* flows along *CF*, with *CE* and the relay joined across it, through the rheostat to the negative pole of the battery. The portion of the current taking the path of *CE* and the relay produces the mark. Similarly the mark at *B* is produced by that portion of the current from *B*'s battery which takes the path through *GH* and the relay.

Intermediate Position of the Key. The intermediate position of a key during the continuous depression of the distant key throws the rheostat into the line circuit and the received mark is made by the current flowing through the relay, shunted by CE and CF in series, and through the rheostat to earth. The received mark is therefore not interfered with. At the sending end the balance is upset and the relay tends to mark, but the current flowing through it is much less than in any of the cases considered. The position of the key when touching neither front nor back stop is only of momentary duration and does not produce any serious effect upon the working of the arrangement.

Resistance of the Arms or Duplex Coils. In the arrangement considered the resistances CE and CF have been given equal values, but this is not essential. Equality of potentials will be produced at E and F if the product of the resistances of CE and the rheostat is equal to the product of those of CF and the line circuit (including distant apparatus). This fact may readily be proved by a consideration of the principle of the Wheatstone Bridge (*q.v.*).

If CF and R are greatly increased in value in comparison with CE and the line circuit the value of the current sent to line is considerably increased, whilst the proportion of the current received passing through the relay when receiving is correspondingly reduced. The best values can, in any particular case, be mathematically determined, but it will suffice to say that under the conditions in which the system is employed by the Post Office the values are fixed at 3000^{ω} each.

Double Current Working. As in the differential system, the batteries are arranged to combine when both keys are at rest or both are depressed, and the increased current in the line circuit produces a difference of potential across the terminals of the receiving apparatus. When one key is depressed, the batteries oppose each other in the line circuit, and the mark is

made at each end by the home battery. To effect the combination of the currents in the line circuit and to obtain the correct direction through the receiving apparatus the line and earth connections of the set are reversed at the down station. The skeleton connections of a Post Office bridge duplex circuit are shown in Figs. 274 and 275. The paths of the currents have

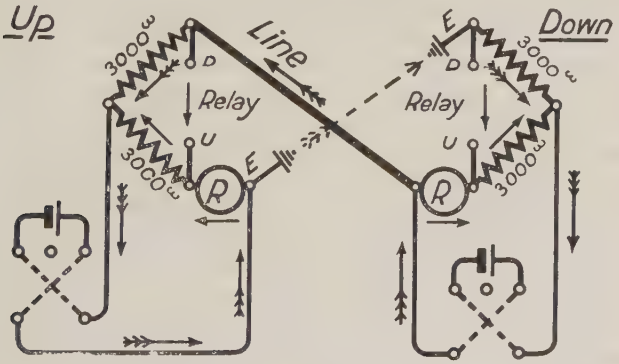

FIG. 274. SKELETON CONNECTIONS OF BRIDGE DUPLEX — KEYS AT REST

been distinctively marked by arrowheads in order to make the somewhat complicated derived circuits easy to follow.

Both Keys at Rest. The circuit is first balanced with the aid of the galvanometer, one coil of which is in series with the line and the other with the compensation circuit. Resistance equal to that of the line and distant receiving apparatus is inserted in the rheostat so that with the distant battery switch in the earthing position the galvanometer is undeflected and is likewise unaffected by the sending key. As in the differential duplex, the switch replaces the battery by a resistance equal in amount to the internal resistance of the battery. For the sake of simplicity, the galvanometers are omitted, but with this exception, the conditions are as shown in Fig. 274 when both keys are at rest.

Considering each station separately, but with the distant battery switch to earth, it will be recognized that the current circulating through the upper or line duplex coil and the line is equal to the current flowing through the compensation circuit duplex coil and the rheostat. There is therefore no difference of potential acros ; the receiving apparatus—a condition which has in fact been secured by actual balancing.

When both batteries are joined up with the keys at rest as in Fig. 274, the up and down stations' batteries combine in the line circuit, thus producing twice as much current in that circuit as either battery acting alone. The path of this increased current (shown by the thickened arrowheads) is from the positive pole of the up battery, via earth to the down station through the divided circuit, formed by the line duplex coil with relay and compensation duplex coil, to the down key where it joins in series with the down battery, along the line to the up station there dividing between the line duplex coil and the shunt circuit formed by the relay and compensation duplex coil via the centre of the duplex coils to the key and negative pole of the up battery. The currents through the divided circuits containing the relays are of course those which operate the relays and in this case are both in the spacing direction. The paths of the compensation circuits are at each end via the rheostat and compensation duplex coil. In each case the current is that due to the home battery acting alone. It will be observed that the currents at each end due to each battery acting separately are balanced, and the current in the relay at each end is therefore produced solely by the current received from the distant office.

It will therefore be recognized that the sender's current does not encounter the inductance of the sender's receiving apparatus since his current is accurately balanced, and the current producing the effect is that received from the distant station.

One Key Depressed. With one key only depressed the batteries oppose each other in the line circuit and the relays at each end are energized by the home current derived from the ends of the compensation circuit duplex coil. This condition is indicated in Fig. 275, where the up key is shown depressed. The line circuit being stopped, the path of current is, at the up station, from the positive pole of the battery through the key, to the duplex coils, at which point it

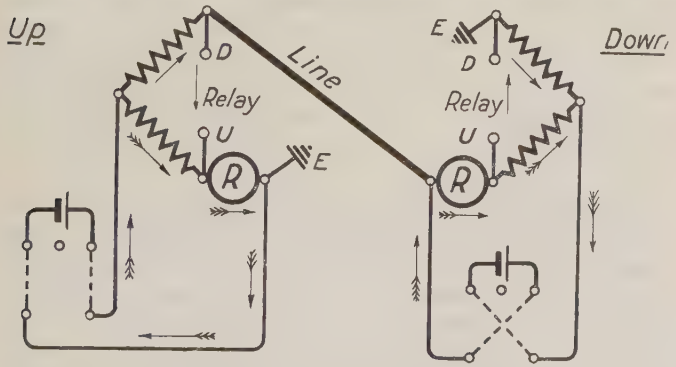

Fig. 275. Skeleton Connections of Bridge Duplex — Up Key Depressed

splits, part passing through the compensation circuit duplex coil, and the remainder through the line duplex coil and relay in the direction D to U, to re-unite with the portion flowing through the compensation circuit coil through the rheostat to the key and thence to the negative pole of the battery.

At the down station a similar circuit is formed, the relay marking with the current shunted from the compensation circuit duplex coil by the parallel circuit composed of the line duplex coil and the relay.

Both Keys Depressed. When both keys are depressed the paths and values of the currents are identical with those of Fig. 274, but in this case the direction of the

current is everywhere reversed, and consequently both relays register marks.

Intermediate Position of Keys. Double current keys with adjustable contacts are employed, and the effect of the momentary short circuit is immaterial. When, however, a transmitter is used there is, of course, a definite interval of break. Let the down station be sending a spacing current whilst the interval of break results from the up station changing from transmission of a marking to a spacing current. The break leaves the value of the spacing current in the up relay practically unaffected, but greatly reduces the value of the marking current through the down relay, since the down current now traverses the up rheostat and relay, the latter being shunted by both the duplex coils in series.

Compensation Circuit and Balancing. The duplex resistance coils are contained in a box furnished with three terminals and two plugs. A signalling condenser is connected across each coil, but for economy of space the two condensers (each of approximately the same capacity as the line) are placed in a single box provided with three terminals (Fig. 277). A shunted condenser is connected in series with the receiver. The right-hand coil of the galvanometer is joined in series with the line, and the left coil in series with the compensation circuit. A triple condenser is usually required in the compensation circuit (Fig. 276).

Balancing is effected with the galvanometer precisely as described in the case of a differential duplex, and is preferably carried out with the distant battery switch to earth.

The behaviour of the condensers and the timing or discharging resistances is precisely as in the differential system. The values of the line charges in the various positions of the keys are likewise identical with the corresponding conditions of Fig. 157.

The Signalling Condensers. The capacity of the

circuit must always be satisfied before the current can attain its full value at the receiving end of the circuit. The time taken for the current to rise to its full value has already been explained to be quite independent of the E.M.F. employed. But the time taken for the current in the circuit to rise to *any given value* may be reduced by increasing the value of the E.M.F. applied. Therefore a signal may be produced by 100 volts in (very roughly) half the time that would be required by

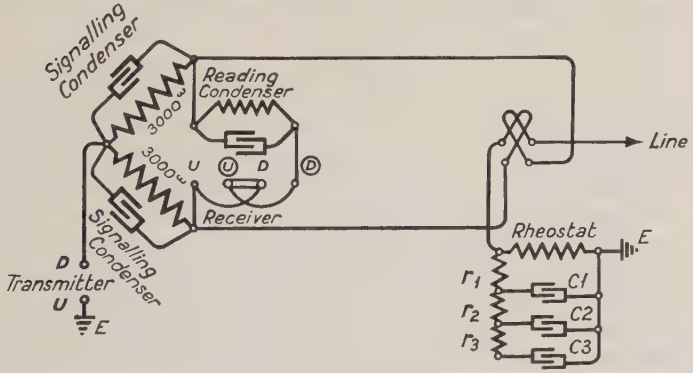

Fig. 276. Bridge Duplex, Arrangement of Condensers

50 volts, or in one quarter the time required by 25 volts—always provided that the maximum value of the current with the lowest E.M.F. was itself adequate.

In the bridge duplex the addition of the signalling condensers produces the advantages which would accrue from the use of nearly twice the battery power, but without its attendant disadvantages. The signalling condenser across the duplex resistance coil connected to line acts as a short circuit until it is fully charged. During this time the full E.M.F. of the battery is applied between the ends of the line, so producing a heavy rush of current into the line. When the condenser is charged, the current traverses the

3000$^{\omega}$ coil before reaching the line, and the E.M.F. applied to the ends of the line is less than the full E.M.F. of the battery by the amount taken up in overcoming the resistance of the coil. If the resistance of the receiving apparatus and the line is 3000$^{\omega}$ the E.M.F. lost in the duplex coil would be one-half the E.M.F. of the battery.

Since a signalling condenser is applied to the line circuit it will be obvious that in order to maintain a balance an exactly similar condenser must be applied to the compensation circuit.

Upon reversal of the current the discharge of the condensers combine with the battery which has been reversed, and the E.M.F. applied to the circuit is that of the battery *plus* the difference of potential due to the charge in the condensers. Until the condensers are discharged and charged in the reverse direction the duplex coils may be regarded as being short-circuited. During the discharge of the condenser its " suck-out " action is of enormous value in hastening the discharge of the line. The capacity of the condensers determines the duration of the effect, and the best value for any given circuit is obtained when the quantity of electricity in the condenser is equivalent to the charge upon the cable. If the capacity employed is excessive the current will rise to too large a value, and there will then be a reverse discharge of the line immediately the current is reduced to its normal value.

Summary of the Action of the Signalling Condensers. To summarize the action of the condensers : they act as short-circuits upon the duplex coils during charging. The reduction in the resistance of the circuit provides a correspondingly heavier flow of current which charges the cable more rapidly than the normal current. The condensers are adjusted so that the heavy current only lasts until the cable contains the same quantity of electricity which the normal current would supply. When the rush of current is over, the normal current

at once produces its effect at the distant end because the cable is fully charged. Upon reversal of the current the condensers act with the battery, and a heavy rush of current in the reverse direction results, so more rapidly discharging and recharging the line in the reverse direction.

Reading Condenser. The shunted or "reading" condenser consists of a 14,000ω three-coil resistance box (2000ω, 4000ω and 8000ω coils), and an adjustable condenser of the $7\frac{1}{4}$ or $11\frac{1}{2}$ m.f. type. The action of this condenser is entirely similar to that described upon page 423, but its importance is, if possible, even greater. A small portion of the first part of every received signal is lost by reason of the short-circuiting effect of the home signalling condensers. When the up key is released the conditions of Fig. 275 are changed into those of Fig. 274. Now the first portion of the negative current flows along the line to the down station, through the signalling condenser across the line duplex coil and through the battery to earth. The reading condenser certainly mitigates this evil, and in Wheatstone working the rapid charging of the line, which is secured by the use of the signalling condensers, more than compensates for the deleterious effect upon the received signals.

Connections. The full connections of a Bridge Wheatstone duplex up station for working over a loop are shown in Fig. 277. At the down station the connections to the *A* and *B* lines are reversed, i.e. the *B* line is connected to the upper right-hand terminal of the galvanometer and the *A* line to the rheostat terminal. When the set is used for working over a single-wire circuit at the up station the *A* line terminal is joined to line and the *B* line terminal earthed. At the down station the *B* line terminal forms the line connection and the *A* line terminal is earthed.

When the switch is turned to simplex the *A* line is connected via galvanometer, duplex switch and teed

connection on the centre of the duplex coils to *D* of the transmitter. The rheostat should be turned to zero as the compensation circuit is in the path of the

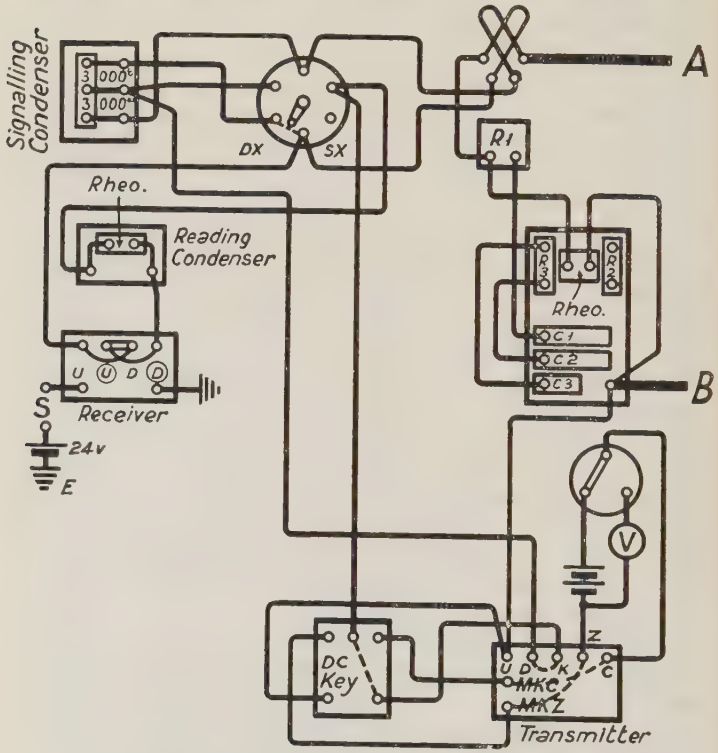

Fig. 277. Connections of Bridge Duplex

received current ; the reading condenser is available for simplex as well as for duplex working. Received currents pass through both coils of the galvanometer in series, but the currents sent out pass only through the *A* line coil.

"G" Relay. The connections of a Bridge duplex with a "G" relay are as shown in Fig. 278. The *D*

and U-circle terminals of the relay are respectively joined to the wires leading to the D-circle and U terminals of the receiver in Fig. 277. The remainder of the

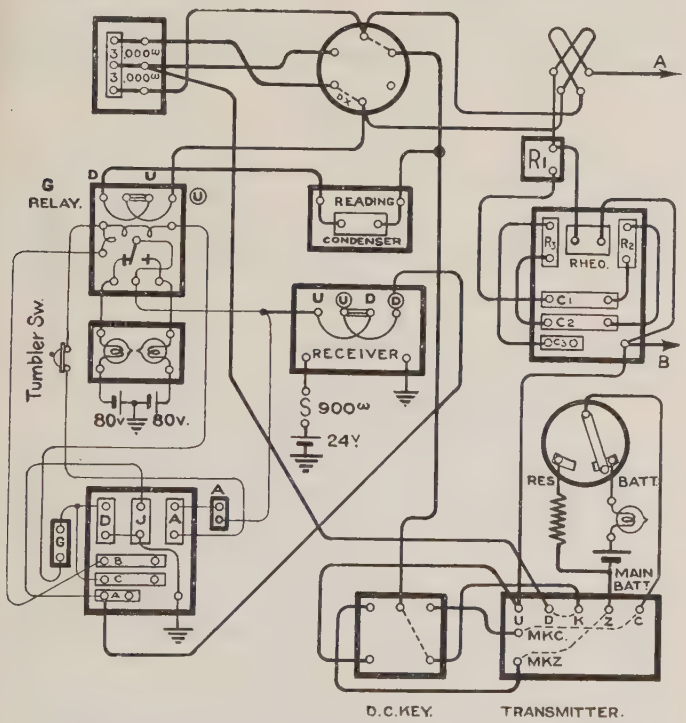

Fig. 278. Connections of Bridge Duplex with "G" Relay (Up and Down Stations)

connections of the "G" relay with the Wheatstone receiver in its local circuit are as in Fig. 129.

Calculation of the Current in Each Part of the Circuit. The calculation of the values of the current in the various branches of the bridge duplex circuit is quite simple, but it involves some tedious arithmetical work.

The resistance of the battery is assumed to be nothing, and that of the shunted condenser and relay 2400ω. The simplest

method of dealing with the calculations is to consider each end separately, and to assume that the distant battery is for the time short-circuited. When these calculations are completed it is only necessary to add the two results found for each part of the circuit.

Assuming that the battery at X is short-circuited, it will be seen (Fig. 279) that a current due to 180 volts flows along

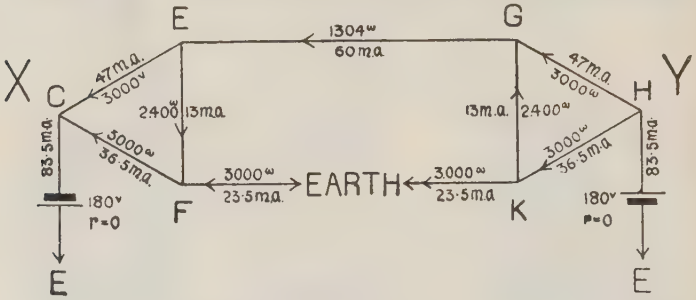

Fig. 279. Paths and Values of the Currents in Each Part of a Bridge Duplex Circuit with Both Keys at Rest

HG and the line to E. The current then divides, one part passing direct to earth (at C), whilst the other passes through the relay and then through FC and the F-earth path in parallel. The circuit is, in fact, as shown in skeleton in Fig. 280.

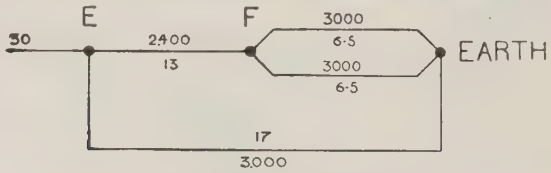

Fig. 280. Skeleton Connections with One Key at Rest

$$\text{Resistance from } E = \frac{(2400 + 1500) \times 3000}{(2400 + 1500) + 3000} = 1696\omega$$

Since G and K are at equal potentials with respect to the battery at Y (the X battery being regarded as short-circuited), the total resistance of the line circuit for the battery at Y

$$= 3000\omega + 1304\omega + 1696\omega$$

$$\therefore \text{Current} = \frac{180^{\text{v}}}{6000\omega} = 30 \text{ mA}$$

As the resistance of the paths *EF*-earth and the lower path (Fig. 280) are respectively 3900ω and 3000ω, the currents are in inverse proportion to those resistances, i.e. they are 13 mA and 17 mA respectively. The 13 mA, however, divides into two equal parts at *F* as shown.

Imagining the battery at *Y* short-circuited, and that at *X* acting, the current through *CF* and the compensation circuit is—

$$\frac{180^{\text{v}}}{3000 + 3000} = 30 \text{ mA}$$

As the circuit is balanced an equal current flows along the line circuit and produces values at *Y* similar to those already found for *X*.

When both batteries are in action the currents are the sums of those previously found, viz.—

In *CE* 17 (from *Y*) + 30 (from *X*) = 47 mA
,, *CF* 6·5 (from *Y*) + 30 (from *X*) = 36·5 mA
,, *F*-earth 30 (from *X*) − 6·5 (from *Y*) = 23·5 mA
,, *EF* 13 (from *Y*) = 13 mA

Through the battery 17 from *EC* due to *Y*
6·5 ,, *FC* ,, ,,
30 line current, from *X*
30 compensation current from *X*

= 83·5 mA

The only point which calls for comment is in regard to the current in *F*-earth. The direction of the compensation current is opposite to that of the received current, and its value is therefore equal to the difference between them. The currents at the *Y* end may be obtained similarly, and are as shown in Fig. 279.

When one key is at rest whilst the other is depressed the conditions at each end are as shown in Fig. 281.

$$\text{Resistance} = \frac{(3000 + 2400) \times 3000}{(3000 + 2400) + 3000} + 3000$$
$$= 4929\omega \text{ approx.}$$

$$\text{Total current} = \frac{180}{4929} = 36 \text{ mA approx.}$$

Current through relay and upper path

$$= \frac{3000}{3000 + 5400} \text{ of } 36 \text{ mA}$$
$$= 13 \text{ mA as before}$$

Calculation of Battery Power. If it is required to ascertain what power must be employed to obtain a certain current through the receiver with a line of given resistance, it is first necessary to calculate the value of the resistance required to

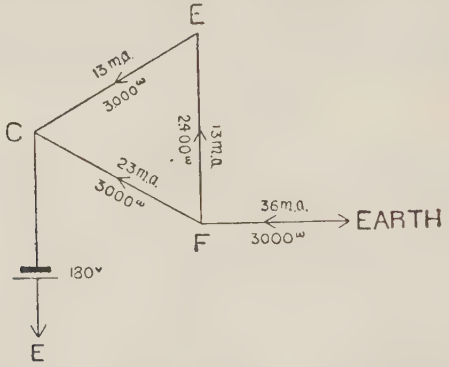

Fig. 281. Paths and Values of the Currents in Each Path with One Key Depressed

balance the circuit. This may be obtained from the following formula—

$$R = \sqrt{\left\{\frac{a^2S}{2a+S} + \frac{a^2+aS}{2a+S}L + \frac{L^2}{4}\right\}} + \frac{L}{2}$$

where R = resistance required in the rheostat
a = resistance of each duplex coil 3000ω
S = resistance of receiver and in the shunted condenser
L = resistance of the line.

For $S = 400\omega$ the formula becomes—

$$R = \sqrt{\left(562500 + 1596\,L + \frac{L^2}{4}\right)} + \frac{L}{2}$$

and for $S = 2400\omega$

$$R = \sqrt{\left(2571000 + 1929\,L + \frac{L^2}{4}\right)} + \frac{L}{2}$$

In the case illustrated $L = 1304$ and $S = 2400\omega$

$$\therefore R = \sqrt{2571000 + 2515000 + 425000} + \frac{L}{2}$$

$$= 2347 + \frac{1304}{2} = 2999\omega$$

which is very approximately correct.

Assuming that 13 mA are required through the relay and that No. 1 cells are used, the number of cells required is found as follows—

Referring to Fig. 281.

If the current through the receiver is 13 mA the current in the lower duplex coil is clearly $\frac{5400}{3000} \times 13 = 23{\cdot}4$ mA.

$$\therefore \text{ Total current} = 36{\cdot}4 \text{ mA}$$

$$\text{Joint resistance of } 3000\omega \text{ and } 5400\omega = 1929\omega$$

$$\text{Total external resistance} = 3000 + 1929\omega = 4929\omega$$

$$\text{Number of cells required} = \frac{4929}{\frac{1{\cdot}0}{{\cdot}0364} - 2} = 194$$

With the secondary cells the calculation is even simpler.

$$\text{Resistance in battery lead} = 300$$

$$\text{Total resistance} = 4929 + 300 = 5229\omega$$

$$\text{Current required} = 36{\cdot}4 \text{ mA}$$

$$\text{E.M.F. required} = 5229 \times {\cdot}0364 = 190^{\text{v}}$$

Power Employed. The minimum power required is 100 volts. No. 1 cells are used.

CHAPTER XIV

THE WHEATSTONE A.B.C., STELJES RECORDER, AND THE HUGHES

PART I. THE WHEATSTONE A.B.C.

The chief advantage of the A.B.C. (Fig. 282), which is a step-by-step telegraph, lies in simplicity of operating ; it is, however, costly to provide and to maintain, and is used by the Post Office to a very limited extent.

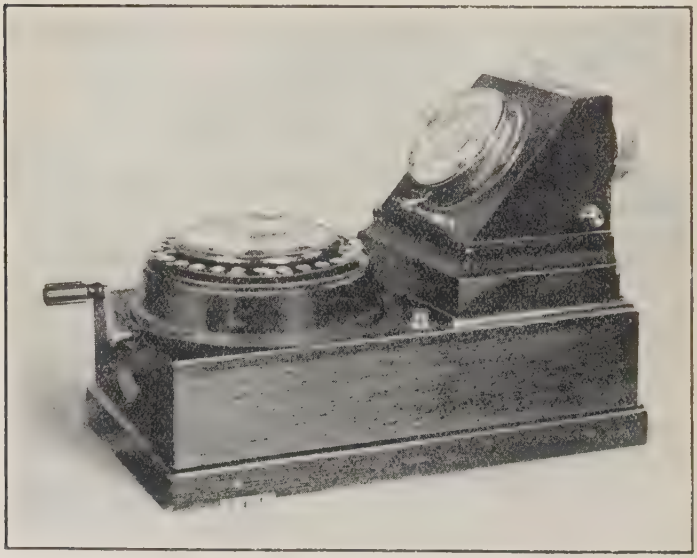

Fig. 282. View of A.B.C. Set

General Principle. The electrical energy required for the operation of the instrument is obtained by revolving the handle of the sending instrument or " communicator " as it is termed. This operation causes the armature of a generator or magneto-electric machine

to revolve and so generate an alternating E.M.F. The position of the key which is depressed determines the number of current waves sent out, and thus controls

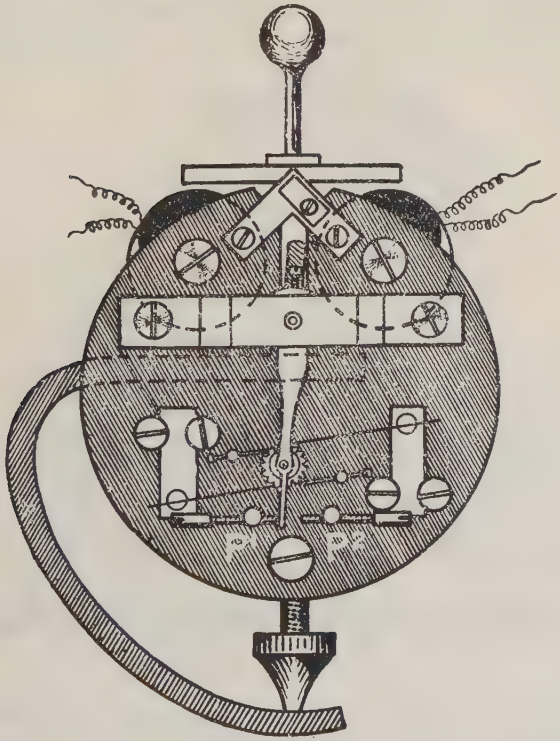

Fig. 283. Plan of Combined Indicator and Bell Showing Escape Wheel Arm

the position of the pointer at the distant end of the circuit.

The Combined Indicator and Bell. The indicator, like the Post Office standard relay, has two soft iron armatures, rendered magnetic by induction from a curved permanent magnet of a horseshoe type, between the four poles of the electro-magnet. The axle carrying

the armatures also bears an arm upon which is pivoted an escape wheel of the form illustrated in Fig. 283, which plays between the edges of two agate discs in Fig. 284. When an alternating current is passed through the coils of the instrument the arm oscillates

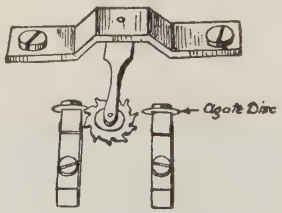

Fig. 284. Escape Wheel and Agate Discs

between P_1 and P_2, and in so doing causes the escape wheel to revolve.

A complete revolution of the escape wheel, which has fifteen teeth, needs thirty motions of the arm alternately right to left and left to right. These movements would be produced by sending fifteen complete alternations through the electro-magnet. Each of the thirty

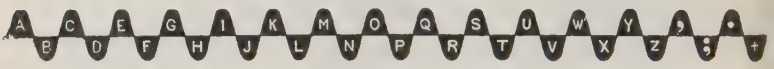

Fig. 285. Currents and Letters

positions of the escape wheel corresponds to a letter or character, and therefore the pointer, which is fixed to the escape wheel by means of a light steel axle, may be caused to stop opposite any predetermined letter or character by sending the requisite number of alternate positive and negative currents through the instrument. For example, the pointer will move from zero to A if one positive current is sent, whilst a positive followed by a negative current would cause it to move to B. The effect of each positive or negative current wave is clearly depicted in Fig. 285.

The indicator pointer is set to zero by the small handle to be seen on the left of Fig. 286.

The bell is worked from the same electro-magnets as the indicator, the pole pieces being extended in an upward direction, with two soft iron armatures

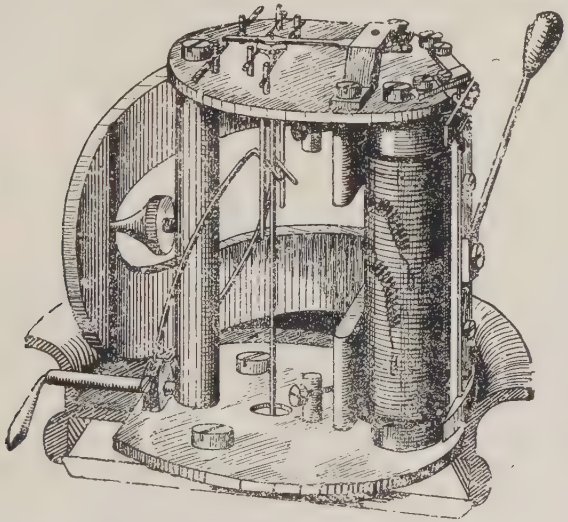

Fig. 286. Perspective Sketch of the Arrangement of a Combined Indicator and Bell

placed above them. The centres of these two armatures are mechanically and magnetically connected to the light permanent bar magnet, which polarizes both. The two ends of the upper* armature are south poles, and therefore the passage of a current through the instrument causes one end to be attracted whilst the other is repelled. When the current is reversed the armature moves in the opposite direction. Since the ends of the lower armature are of opposite polarity to those of the upper one their tendency to

* Seen at the bottom in the figure.

motion is always in the same direction as that of the upper armature. Attached to the permanent magnet is an arm carrying a bell hammer normally resting upon one of the two bells between which it is placed. It will therefore be obvious that the alternating currents which actuate the indicator pointer will also cause the hammer to play between the two bells, thus giving a sufficiently loud ring to call attention to the circuit. A switch is provided which clamps the hammer of the bell when turned to the "off" position during the transmission of messages.

The Communicator. The pointer of the indicator may be caused to travel to any one of the thirty characters by meting out a suitable number of current impulses alternately varying in direction.

The dial of the communicator, furnished with a pointer, is divided into thirty divisions corresponding with those of the indicator. A key is placed opposite each character, and messages are sent by revolving the handle and depressing the keys in the order in which the letters occur in the words to be signalled. The completion of a word is indicated by pausing at zero. The pointer is arrested at the point where the key is depressed, and is released immediately a second key is put down. This depression of the second key also restores the first to the normal position by means of an endless chain passing beneath the lower ends of the keys and of such length as only to allow one key to be down at a time.

Operation of Contact Maker and Pawl Arm. The handle of the communicator revolves the armature of a generator of the type shown in Fig. 93. It also drives a spur wheel (Fig. 287) having 15 teeth. An arm is fitted above the spur wheel carrying a pawl which engages with its teeth and so imparts the motion to the pointer which is carried on its axle. Between the pawl arm M and the contact arm K, there is a friction-tight coupling. Hence, whilst M revolves, K moves upwards, thus establishing a connection between the pivoted lever T and the uninsulated side of the contact arm K, and breaking that

which normally exists between T and S. Since fifteen complete alternations must be sent out during one revolution of the pointer the armature of the generator must make fifteen revolutions whilst the pointer makes one.

The function of the spur wheel and pawl is to disconnect mechanically the handle from the pointer immediately the latter reaches a depressed key. The contact arm then electrically disconnects the armature, so preventing more than the correct number of alternations from being sent out.

Immediately the extremity of the pawl b meets a depressed key, d moves outwards, thus disconnecting M from the spur

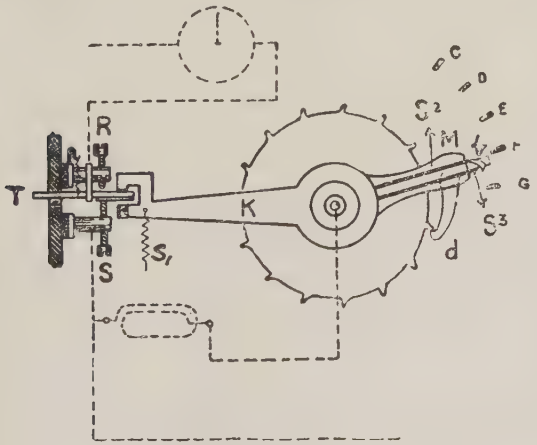

Fig. 287. Spur Wheel and Contact Maker

wheel. The spring S_1 upon the contact arm immediately restores the contacts to their normal position. If the zero key were depressed M would stop opposite zero whilst the spur wheel continued to rotate. The depression of, say, the A key and the consequent rising of the zero key would permit the springs S_2 and S_3 to restore the pawl to its normal position, when it would again engage with the spur wheel and move forward to A. In doing this K would move with M, so joining up the armature. Immediately M reached A the pawl would again disengage, and K would restore the contacts to the normal, so disconnecting the armature. If the D key were now depressed the pawl arm M would move from A to D during which time K would join up the armature.

The spur wheel is provided with 15 teeth, and is permanently geared to the armature. The distance between each tooth therefore corresponds to one complete revolution of the armature. It is essential that the armature should always be in the correct position with respect to the pole-pieces when the contact arm K joins it up. Were this not assured two positive or two negative currents might be sent out as the last current to signal a particular letter, and the first current for

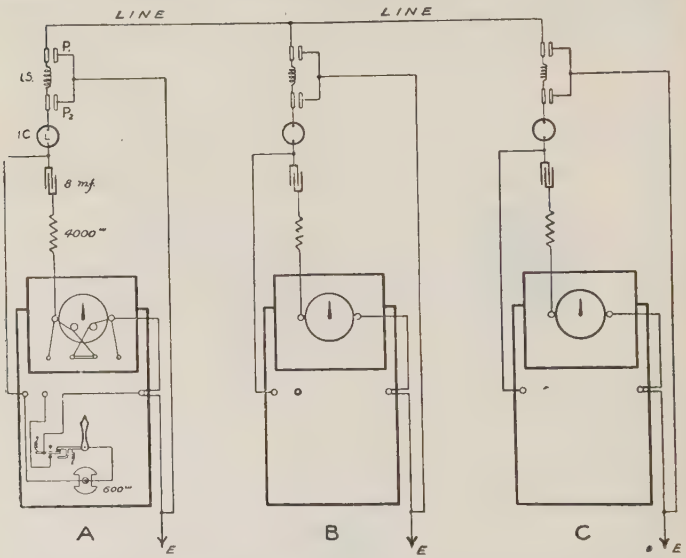

Fig. 288. A.B.C. Circuit. Leak Working

P_1 and P_2 are lightning protectors, and *I.S.* and *I.C.* are inductances in connection therewith.

the next letter. The spur wheel and pawl provide that the armature is in exactly the same position when again connected to line as it was when the last current was sent.

Connections of A.B.C. Sets. The communicator and indicator may be placed in series. Better results are, however, obtainable by using the leak method with condensers in series with the indicators to eliminate the effects of their inductance and also to cut out any leakage currents which may be present. An 8 m.f. condenser and a 4000ω resistance coil is placed in series with the indicator (coils in series), and the second

terminal of the communicator is left disconnected so that the armature is joined to line only when currents are actually being sent out.*

PART II. THE STELJES RECORDER

The Steljes recorder which replaces the Wheatstone A.B.C. indicator prints the message in Roman characters upon a tape. It is used on many private wires where a record of the message is required.

The number of currents sent out by the communicator determines the position of the type wheel in a similar way to that in which the movement of the A.B.C. indicator needle is controlled. The printing electro-magnet is placed in series with the escapement electro-magnet, the armature of the former being permanently attracted whilst the pointer of the communicator is in motion and released only when the series of currents is ended. The moment the current ceases the tape is brought into contact with the inked type wheel, the character thereby recorded, and the tape moved forward. The type wheel is inked by means of a light wheel which normally rests upon and revolves with it.

Type Wheel Escapement. The escapement electro-magnet (Fig. 289) with its polarized armature is of the form which has long been familiar in telephone magneto bells. Its permanent magnet curves round from the yoke of the electro-magnet to the centre of the soft iron

* The current C in a circuit containing resistance R, capacity K, and inductance L, due to an alternating E.M.F. of E volts with a periodicity of n complete alternations per second—

$$C = \frac{E}{\sqrt{R^2 + \left(pL - \frac{1}{pK}\right)^2}} \text{ where } p = 2\pi n$$

The effects of inductance are eliminated when $pL = \frac{1}{pK}$ or $K = \frac{1}{p^2 L}$

Taking the average periodicity of the current on an A.B.C. circuit as 15 per second and the inductance as 14 henrys—

$$K = \frac{1}{2^2 \times 3{\cdot}1416^2 \times 15^2 \times 14} = {\cdot}000008 \text{ approx.} = 8 \text{ m.f.}$$

armature, so making the two ends of like polarity. The escapement pallet which engages with the escape wheels is fixed at right angles to this armature. Each wheel has fifteen equally spaced teeth placed so that the apices of the teeth of the one wheel are opposite the bases of the teeth of the other. The escape wheels are placed upon the same axle as the type wheel, which revolves when released by the pallet. When the armature moves, the pallet releases the tooth with which it is engaged, and thus allows the axle to turn until it engages with the tooth of the other escape wheel, i.e. the axle moves one-thirtieth of a revolution. In order therefore to bring any letter upon the type wheel directly above the paper, it is only necessary to send the requisite number of alternations through the electro-magnet.

Printing Arrangements. The printing mechanism is operated by a somewhat heavier weight than that required for the escapement.

The armature of the nonpolarized printing electro-magnet (seen on the left in Fig. 289) when attracted depresses the pallet piece. The lower stop now clears the catch which moves forward only to be arrested by the upper stop of the pallet piece. Immediately the armature is released by the cessation of the series of currents the upper stop rises clear of the catch, and thus the axle makes a complete revolution, being arrested by the lower stop. The eccentric cam raises the paper against the type wheel, thus printing the letter.

Figure Changing Cam. Two type wheels mounted side by side upon the same axle are employed, the one bearing letters and the other figures and various other useful signs. The wheels are capable of lateral motion and either may be brought directly over the tape according to the position of the "figure changing cam." Two divisions exactly opposite to each other upon the communicator are marked respectively "letters" and "figures." At the corresponding points upon the type wheels blanks are left. When the printing lever raises the tape

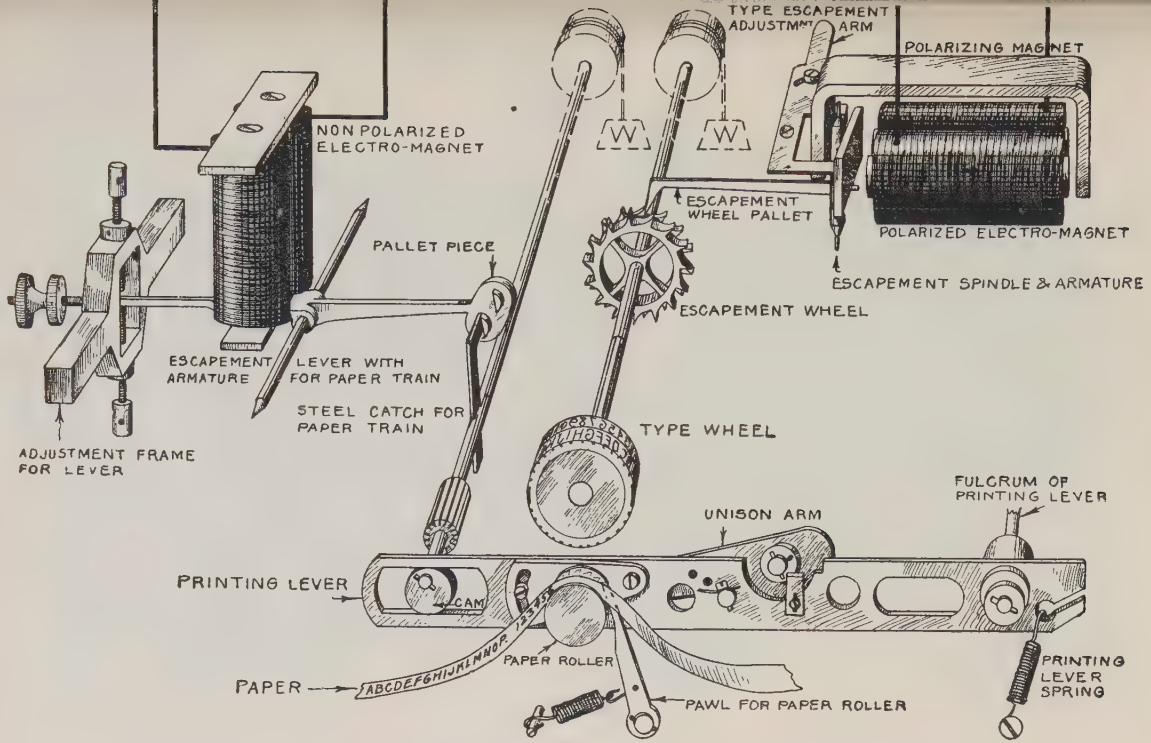

FIG. 289. GENERAL FIGURE ILLUSTRATING PRINCIPLE AND ESSENTIAL PARTS OF RECORDER

up to the type wheel at these positions no character is printed, but a radial pin is struck which moves the type wheels along the axle.

General Arrangement and Slip Feeding Device. Every time the printing lever (Fig. 289) is moved up against the type wheel the cam engages a lower tooth upon the ratchet wheel, and the descent of the lever therefore feeds the slip forward to an extent equal to the space of one letter, so placing it in position for the printing of the next letter.

Unison Lever. The unison device is exceptionally simple and effective. Upon the type wheel axle a radial arm X (Fig. 290) projects which engages with the end of the lever W when

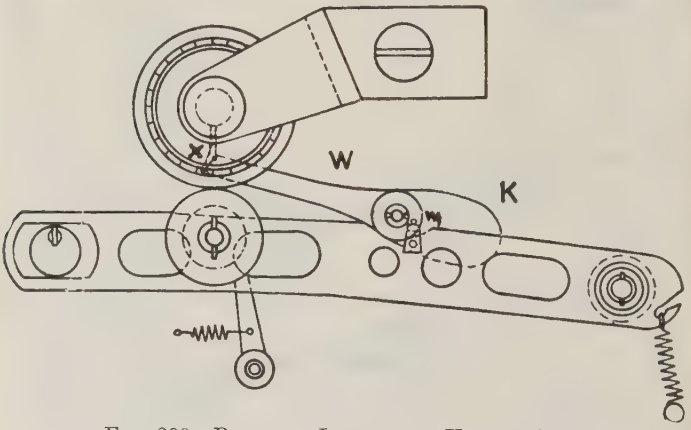

Fig. 290. Printing Lever and Unison Arm

in its upper position. The lower part of the lever carries a pin W_1, which is struck by the printing lever every time a letter is printed, thus depressing the lever W. This lever is fixed friction-tight upon an axle which tends to move it to its highest position when the type wheel has moved through about three revolutions. If, therefore, the pointer of the communicator is allowed to make three complete revolutions without printing a letter, the radial arm X is arrested and the type wheels stopped at zero. Immediately the type wheel stops the zero key is depressed and the communicator and the type wheels are therefore at zero, but the printing lever rises and puts the lever W back to its lower position, as shown in Fig. 290. Both instruments are therefore at zero and the message may at once be signalled.

FIG. 291. GENERAL VIEW OF STELJES APPARATUS

The general appearance of the apparatus is shown in Fig. 291.

A motor-driven communicator of considerable power has also been produced—in fact, as many as one hundred recorders have been simultaneously worked from it.

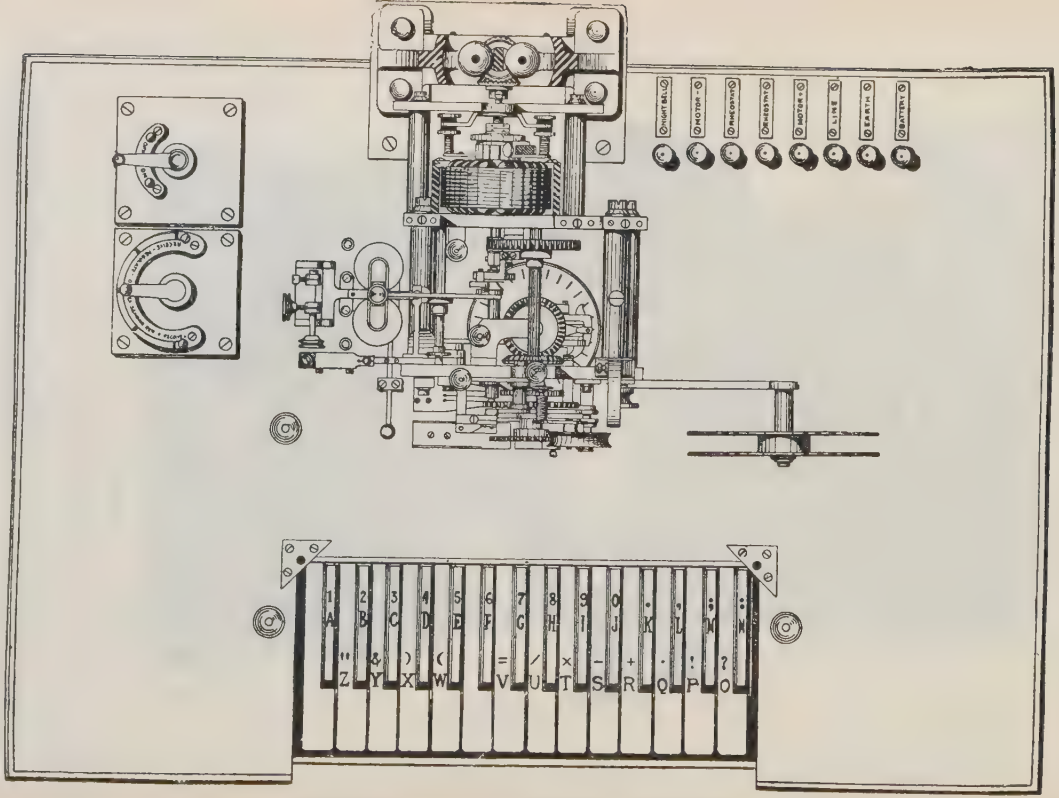

FIG. 292. PLAN OF HUGHES INSTRUMENT

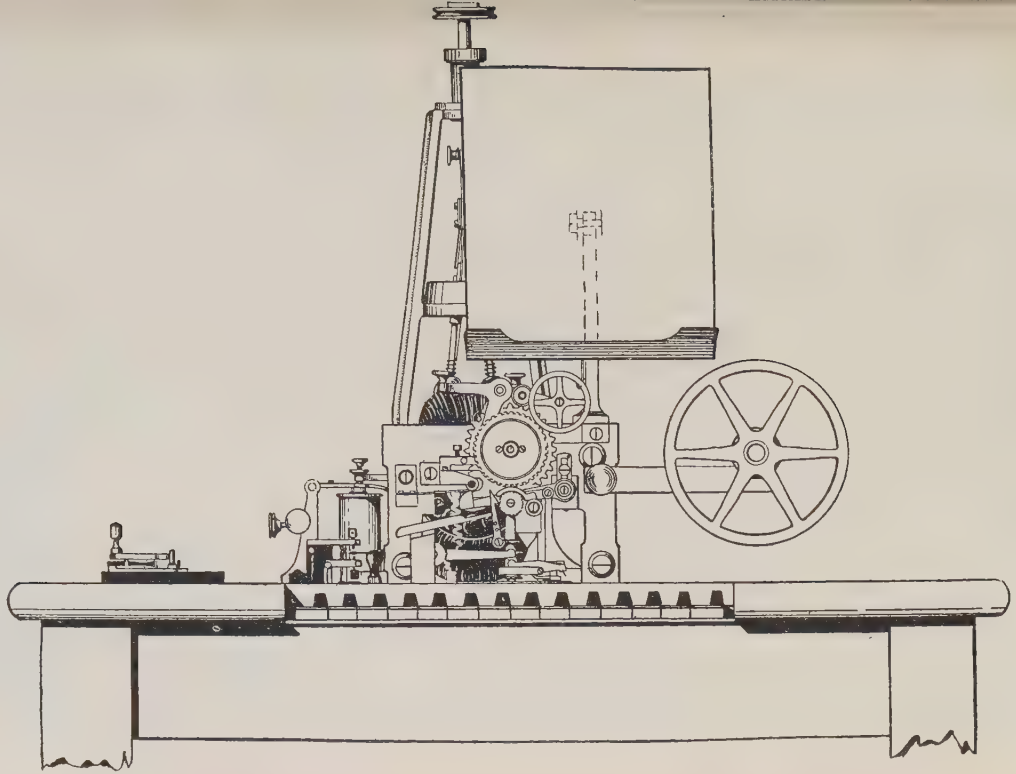

Fig. 293. Front View of Hughes Instrument

PART III. THE HUGHES

The Hughes is a directly worked (as opposed to relay worked) synchronous type-printing telegraph, and is very largely mechanical in action. It differs from all other systems in requiring only one current for each character printed and in the fact that the type wheel revolves continuously, no time being lost in the act of printing. The working currents are of equal duration but are separated by unequal intervals of time.

The sending keyboard contains fourteen black and fourteen white keys arranged alternately after the fashion of a piano keyboard. The position of the key depressed determines the instant at which the current impulse is sent out, and the function of this current is merely to release an armature—all the remaining functions, with one exception, are purely mechanical.

The speed of working on cable circuits is greater than the sounder—in fact, it can be worked at its maximum speed on any circuit which will, with shunted condensers, give a Wheatstone speed of forty words per minute (i.e. a KR of 450,000). This is accounted for by the fewer currents required and the longer intervals between them. It may a'so be added that a current of one-half of a milliampere is sufficient to work the instrument, and therefore the voltage applied to submarine cables over which it is worked is not unduly high.

Hughes working is extensively adopted on the Continent, but in this country it is now confined to cable circuits working to the Continent.

The type wheel at one end of the circuit is precisely similar to, and revolves in unison with, the type wheel at the other end, i.e. not only do the wheels revolve at equal speeds but, allowing for the time required for the propagation of a signal along the line, the same character upon each wheel occupies a position immediately above the tape.

The twenty-eight transmitting keys are mechanically connected to twenty-eight pins working in radial slots

spaced regularly in a horizontal plate. The chariot, which consists of a radial arm carrying a pivoted lever in connection with the stationary contact lever, sweeps over the pins. When a key is depressed the corresponding pin is raised and the end of the pivoted lever moves upwards when the chariot passes over it. This causes a current to be sent out to line.

A current may therefore be sent out at any one of the twenty-eight points in accordance with the position of the key which is depressed. It will, later, be shown that one, two, three, or even four currents may be sent out during one revolution of the chariot.

The chariot and type-wheel normally move together so that each position of the chariot corresponds to the same position on the type-wheel. By means of the zero-adjusting lever, the type-wheel, which is fixed friction-tight upon its axle, may be stopped at its zero position without arresting the revolution of the other moving parts of the instrument. The depression of the letter blank key releases both type wheels, which start together from the zero position. If, for example, letter " R " key is depressed, the letter " R " upon both type wheels will (neglecting the effect of line retardation, q.v.) be in the printing position at the instant when the chariot passes over the raised pin connected to the " R " key. As the pin is raised the chariot sends a short current out to line and at the same time mechanically operates the home apparatus with the result that " R " is printed at both stations.

The sole function of the current is to release the armature of the electro-magnet, the upward movement of which entrains the printing axle, causing it to make one complete revolution.

The revolution of the printing axle, which runs at seven times the speed of the type wheel and chariot, mechanically (i) corrects the position of the type wheel, thereby securing unison, (ii) brings the tape into contact with the inked type wheel, thus printing the

character, (iii) moves the tape forward, and (iv replaces the armature of the electro-magnet in readiness for the next signal.

By means of a cam on the printing axle, the position of the type wheel is adjusted so that the particular type

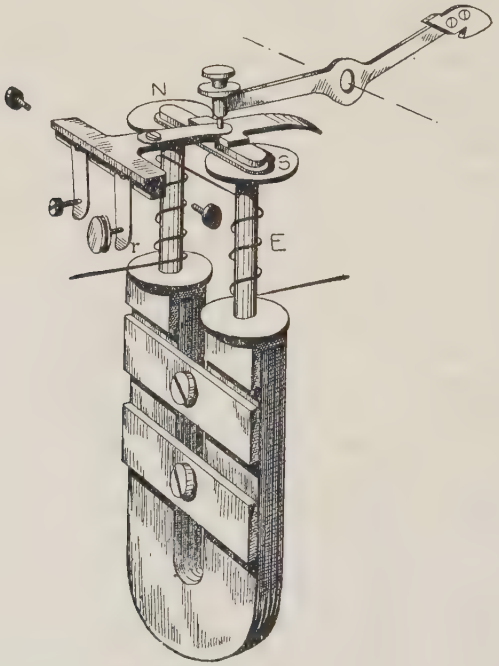

Fig. 294. Electro-magnet

is precisely parallel to the face of the paper at the instant of printing. Since at least one, and sometimes three or four, characters are printed during each revolution the frequency of this purely mechanical correction is ample to secure and maintain perfect unison between the two instruments.

The instrument is driven by a small electric motor controlled by a rheostat, an adjustable governor

serving to maintain uniformity of speed and also to provide a means of adjusting the speed to accord with that of the distant apparatus.

The component parts of the apparatus now call for consideration in detail.

The Hughes Electro-magnet. The two coils, having a resistance of 500$^{\omega}$ each, are wound upon soft iron cores polarized by a powerful compound magnet (Fig. 294). The soft iron armature is normally attracted to the cores in opposition to two antagonistic springs. If, for example, the force of attraction is 100 units and the upward pull of the spring is 92, the armature is held down by a force equal to 8 units. The passage of a current through the coils in such a direction as to oppose the magnetism of the cores will cause the armature to be released immediately the attraction is reduced below 92 units. The armature will then fly off due to the force of the spring. In this way the reduction of the attraction by anything over 8 units will cause the instrument to function. The upward movement of the armature serves to bring into operation the various mechanical portions of the apparatus which synchronize the two type wheels, print the letter, move the paper forward, and replace the armature.

The value of the attraction between the cores and the armature may be varied by sliding the soft iron bar to right or left as required. The bar (Fig. 295) forms a conducting path for the lines of force, thus reducing the number flowing through the armature, and hence the force of the attraction. When the lever is pushed well over to the right it is evident that the attraction will be least, whilst it will be gradually increased as the volume of that part of the soft iron bar resting upon the right-hand magnet limb is reduced by sliding it to the left.

The upward pull of the armature is produced by two springs acting upon the axle of the armature lever. One spring is of considerable strength, and very rarely requires adjustment. The second spring is of a much lighter description, and is provided with a thumb-screw. This screw is first of all placed in such a position that its thread extends equally upon either side of its support, thus providing an equal range of adjustment

in each direction. The permanent magnet armature is next adjusted until the slightest vibration will serve to release the armature. The adjusting screw is then given two turns in such a direction as to reduce the force tending to raise the armature. This provides ample working margin without unduly decreasing the sensitiveness of the instrument.

The position of the electro-magnet is adjustable, so as to ensure that the armature shall lie evenly upon the centre of the polar projections. A piece of slip is placed between the

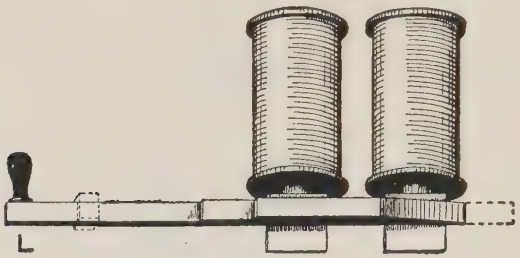

Fig. 295. Magnetic Adjustment

armature and the cores, and is secured in position by suitable clips, to prevent "sticking" and to render the action more rapid.

Motor and Governor. The motor is driven from the secondary cell installation and its speed is regulated by a 100^{ω} slide rheostat.

The governor maintains uniformity of speed whether the instrument is printing or running free. The back end of the motor axle carries a bevel wheel which engages with a similar wheel A upon the vertical axle G of the governor (Figs. 296 and 297). As the axle rotates the two weights B_1 and B_2 fly outwards in opposition to the force of the springs, and the tow brush or brake upon each rod rubs around the inner side of the ring R. The tendency to increase speed during periods of inaction is opposed by the increased pressure of the brushes on the ring, and conversely when the speed tends to drop as the result of the work done in printing, the braking effect is reduced. The extra

energy required when the printing axle is entrained is thus obtained and the speed remains remarkably constant. The final adjustment of the speed is made by turning the milled head at the top of the governor.

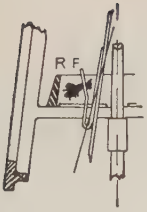

FIG. 297. BRAKE ON THE GOVERNOR

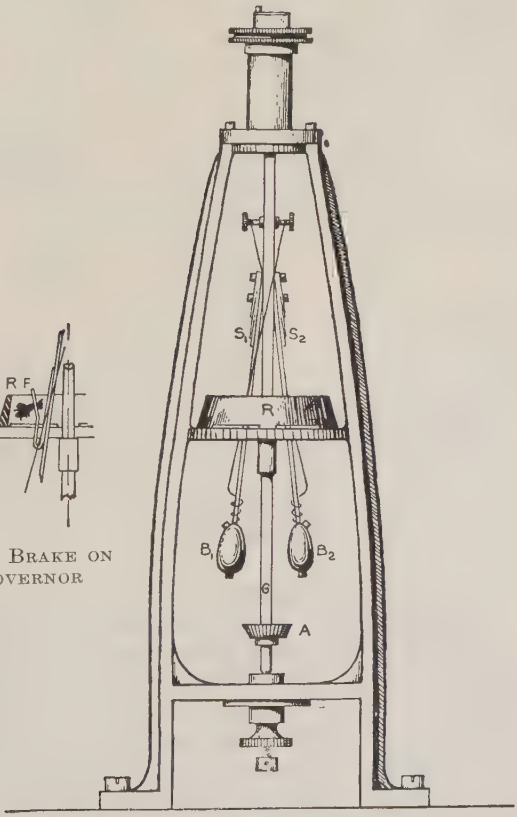

FIG. 296. VIEW OF GOVERNOR

Electrical Details. When the armature rises from the cores of the electro-magnet the number of lines of force is reduced and a magneto-electric current opposing the working current is produced. This is innocuous,

save when the circuit is very short. But on replacing the armature the E.M.F. is in the same direction as the working current, and the armature would again be thrown off by its action were not provision made to disconnect the coils whilst the armature is being replaced. A current passing through the coils releases the armature *a* (Fig. 298), which strikes the detent

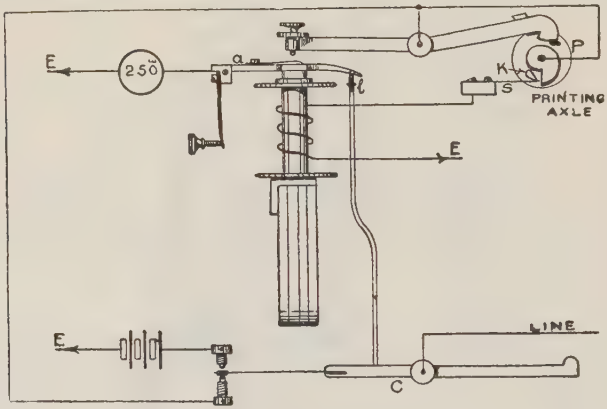

Fig. 298. Skeleton Connections and Arrangement of Hughes Apparatus

lever sharply and thereby shunts the coils by the 250^{ω} resistance coil. At this moment the resistance of the instrument is 125^{ω}, assuming that the coils are joined in parallel. The printing axle is now entrained, and in revolving the cam *K* disconnects the coils at the contact spring *S*. The connection is not again made until after the armature has been replaced. It will also be observed that during this time the line is earthed through the 250^{ω} resistance coil, and this tends rapidly to clear the line of static charge.

It will be observed that the resistance of the instrument varies only from 125^{ω} to 250^{ω}, instead of from 0 to 250^{ω} were the line earthed direct—a definite advantage in duplex working.

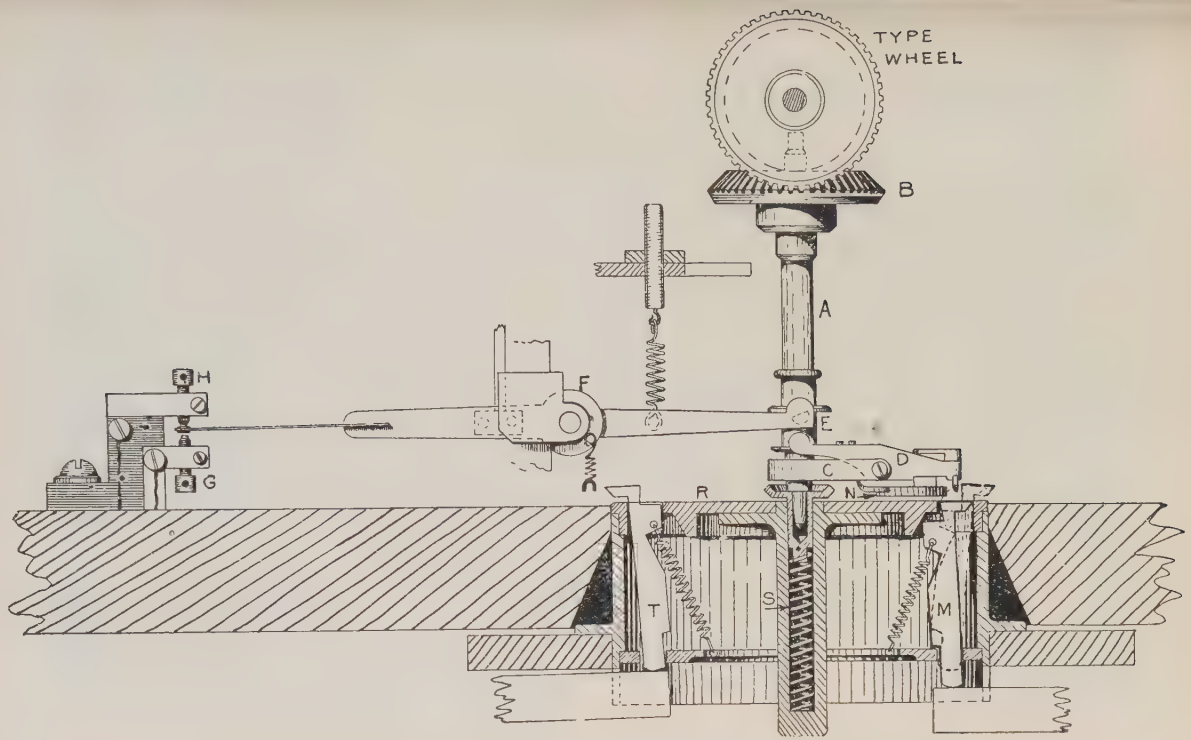

Fig. 299. Chariot, Contact Maker and Pins

The Chariot. Twenty-eight letter pins, which may be raised by their repective keys, normally rest within the radial slots upon the circular plate shown in plan in Fig. 301. These pins are of the form depicted in Fig. 299, and are normally held in position by the spiral springs attached to them. The depression of a key raises the relative pin above the pin plate, as indicated by the dotted outline at *M*.

The chariot revolves with the type wheel axle to which it is geared by equal bevel wheels and maintained in intimate contact by the upward pressure of the spiral spring *S* (in compression). The chariot axle *A* carries a radial arm *C*, upon the end of which the rocking lever *D* is pivoted. The outer end of this lever is directly above the pins in the key plate, whilst the inner end is connected to the lipped steel collar *E* fixed quite loosely upon the chariot axle *A*. The inner end of the pivoted contact lever *F* carries a projection resting upon the underside of the upper lip of the steel collar. The outer end normally rests upon the contact stud *G*, but clear of *H*.

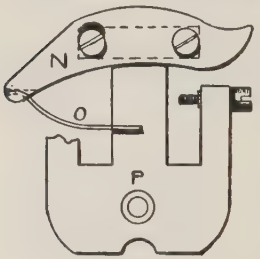

FIG. 300. REJECTOR

The chariot sweeps round above the pins, and when it meets a raised pin the inner end of the rocking lever *D* is depressed, so pulling down the collar *E* which raises the end of the contact lever from the stud *G* to *H*. As *H* is in connection with the battery, and the contact lever is to line, a current is sent out during the time that the chariot is passing over the pin.

The Rejector. When any particular key is depressed the letter or character it represents is only printed once, no matter how long the key is kept down.* Moreover, it is impossible to release a pin whilst the chariot is actually passing over it, thus ensuring that every current sent out shall be of precisely equal duration—a matter of very considerable importance. These results are obtained by the "rejector," so called on account of its action in rejecting a pin over which it has passed once without the key being released. It is carried upon the arm of the chariot and consists of a steel plate *N* of the shape illustrated in Fig. 300. In order to prevent the breakage of

* If a key is only partially depressed repetition may be obtained, and by forcing a piece of cardboard between the letters "G" and "U" when only partially depressed a continual call is given to the distant station, currents being transmitted every time the chariot passes the pins.

any pin which happens to stick, the forward portion of the plate is secured by a screw passing through a slot against the inner end of which it is normally held by the spring *O*. This gives the plate a certain amount of play.

Referring now to Fig. 299, which has been lettered to accord with Figs. 300 and 301, it will be seen that the forked chariot arm *C* carries the contact arm *D*, beneath which is the rejector, Immediately the forward portion of the rejector meets a

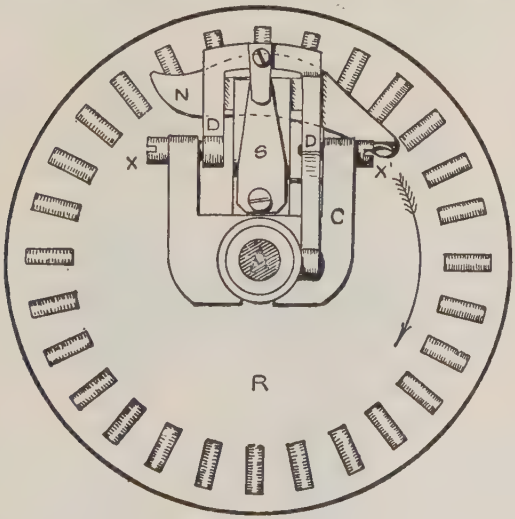

Fig. 301. Pin Plate and Rejector

raised pin, that pin is held until the rejector has passed it, during which time the release of the key in connection with it does not permit the pin to fall back. When the back end of the rejector has passed the pin, it is already pushed back beyond the reach of the contact arm, and therefore when the chariot next passes a second current is not sent out. The letter may, of course, be printed twice if the key is released immediately the chariot has passed and is then depressed again before the rejector reaches the pin.

Number of Characters Printed per Revolution. Mechanical inertia limits the number of characters which can be printed during a single revolution of the type wheel. After the depression of the letter blank key, the next letter which can be printed is " E," followed by " J," " O," and " T," i.e. every

fifth letter. The chariot, however, covers three pins only in order to provide a working margin.

The Type Wheel Axle. The type wheel axle is driven by the motor and transmits the motion to the chariot by means of bevel wheels. It carries three wheels, (1) the type wheel, (2) the correction wheel, and (3) the ratchet wheel. The ratchet wheel R (Figs. 302 and 303) is held in contact with the collet upon which it is mounted by the dished disc d. The collet is secured to the axle by the screw b_1, but the ratchet wheel is

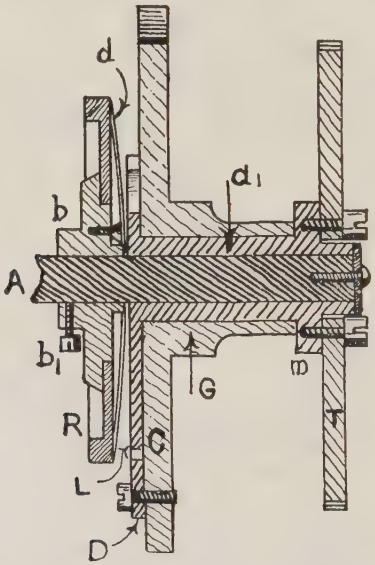

Fig. 302. Type Wheel Axle

only friction-tight upon it, and may therefore be held stationary whilst the axle continues to revolve. The ratchet wheel (Fig. 303) is engaged by the pawl F fixed to the face of the correcting wheel C. By means of the pawl P the motion of the correcting wheel is transmitted through the lever L to the tube d_1 which is rigidly connected to the type wheel T (Fig. 302). This tube passes over the type wheel axle, but is sufficiently loose upon it to prevent the motion of the axle being communicated. Now the correcting wheel is carried upon a second tube which fits loosely over the type wheel axle.

Consideration will show that the type wheel axle (by friction)

drives the ratchet wheel, which in turn drives the specially connected correcting and type wheels. The correcting wheel drives the type wheel, but their relative positions are determined by which of the two notches in the pawl is occupied by the type wheel arm. These two positions differ by $\frac{1}{56}$ of a revolution. The relative positions of the ratchet wheel and that of the combined correcting and type wheels may vary to any extent, whilst raising the click *F* permits the ratchet wheel to revolve alone. The provision of this click is merely to avoid

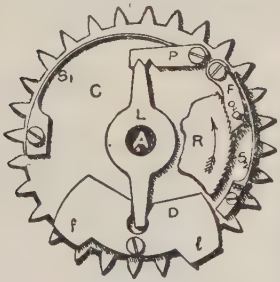

FIG. 303. CORRECTING AND RATCHET WHEELS
Type wheel printing letters

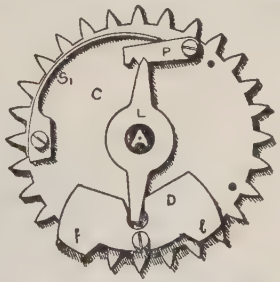

FIG. 304. CORRECTING WHEEL
Change-over from letters to figures

damage in the event of the jamming of the type or correcting wheels.

Change-over from Letters to Figures. The object of the arrangement by which the type and correcting wheels may be relatively displaced by $\frac{1}{56}$ of a revolution is to provide for the printing of figures, signs, and punctuation marks as well as the letters of the alphabet.

Letters and figures alternate upon the type wheel. When it is desired to print figures the type wheel is displaced to the extent of $\frac{1}{56}$ of a revolution by first depressing the "Figure Blank" key. Each unit of time, equal to $\frac{1}{28}$ of a revolution of the chariot, which elapses, allows the type wheel to turn through $\frac{1}{28}$ of a revolution. With the currents arriving with the same time intervals, but with the type wheel displaced $\frac{1}{56}$ revolution, the characters printed would be "0 (figure, not the letter) ? ×." The fifty-six characters and spaces upon the type wheel are in order as follows—

Blank Blank 1 A 2 B 3 C 4 D 5 E 6 F 7 G 8 H 9 I 0 J . K , L ; M : N ? O ! P ' Q + R – S × T / U = V Blank Blank (W) X & Y " Z.

It will be shown later that the position of the type wheel is corrected every time the electro-magnet is actuated. This is accomplished by the correcting cam which forces its way between two successive teeth upon the correcting wheel. Now, at two points upon the type wheel blank spaces are left, whilst either of the corresponding positions upon the correcting wheel may be occupied by the projecting portions of the "figure-changing lever." Referring to Fig. 303 it will be seen that the depression of the first or letter blank key will cause the cam to pass between the teeth opposite to *f*. As there is no character upon the type wheel at the point which is directly above the

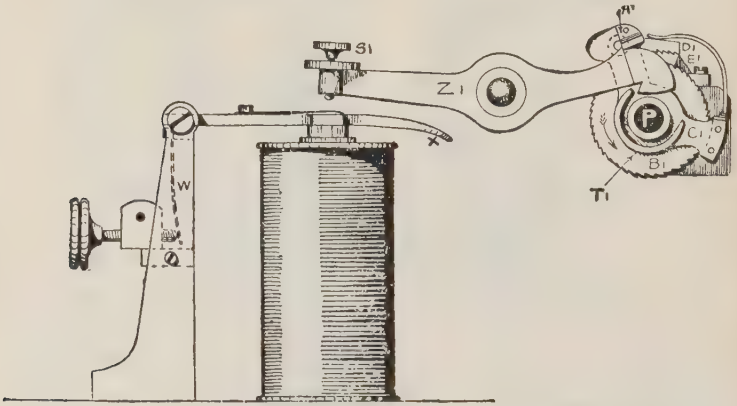

FIG. 305. ELECTRO-MAGNET AND PRINTING AXLE RATCHET

paper, a space is produced. If, however, the correcting wheel had moved so that the right-hand portion of the change-over lever was opposite the correcting cam, then this cam in passing between the teeth would move the figure-changing lever upwards, thus causing the lever to engage the backward notch upon the pawl. This would be the case if the figure blank key was depressed. As already stated, this displaces the type and correcting wheels by $\frac{1}{56}$ of a revolution, so changing over from letters to figures. The change back to letters would of course be made by depressing the letter blank key, when the correcting cam would reverse the position of the cross lever in the notches of the pawl.

Printing Axle Entrained. The impact of the armature upon the pivoted detent lever Z^1 (Fig. 305), depresses the further end of the lever, thus releasing the click D^1 which descends upon and engages with the continuously revolving ratchet

wheel B^1. In this way the printing axle is entrained, but when the click has travelled about $\frac{7}{8}$ of the revolution it reaches the inclined plane E^1. The momentum it has acquired is sufficient to cause it to ride up the inclined plane, so disengaging from the ratchet wheel and finally bringing it back to its normal position of rest against the projecting portion of the detent lever.

Upon the central portion of the click and click-spring arms an eccentric T_1 (Fig. 305) projects sufficiently far to engage the detent lever during revolution. The eccentric, therefore, raises the detent lever, and by means of the screw S^1 replaces the armature upon the cores. It will also be observed that

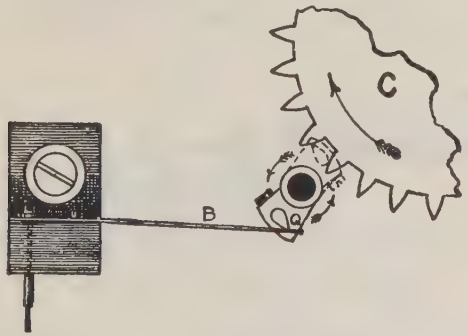

Fig. 306. Correcting Cam and Disconnection of the Electro-magnet

the detent lever is in its normal position before the click disengages, and that it is therefore impossible for the click to overshoot its normal position.

The correcting cam Q (Fig. 306) normally rests upon and makes contact upon the spring B, but during revolution this contact is broken. This serves to break the circuit of the electro-magnet whilst the armature is being replaced.

The other functions performed by the printing axle are effected by three cams attached to the printing axle. They are clearly shown in Fig. 307, and the function of each suitably indicated.

The steel correcting cam Q (Fig. 306) which is carried round by the printing axle engages with the correcting wheel, and is so adjusted that when the type wheel is in its correct position, i.e. when the letter to be printed is exactly parallel with and wholly in contact with the tape, it lies between the teeth of the correcting wheel, as shown by the dotted lines in Fig. 306.

If the wheel is slightly behind the position it should occupy, the cam strikes the forward tooth, and so pulls the wheel round to its correct position, always provided that the actual and the correct positions do not differ by more than half a tooth. In a similar way the cam pulls the wheel back to the correct position if the wheel is in advance.

The correcting cam is of tempered steel, as also is the correcting wheel. The cam can readily be removed and another substituted whenever signs of wear appear.

Paper Movement. Referring to Fig. 308, it will be seen that the printing lever Q_1, pivoted at m_1, carries a second lever I, known as the paper-moving lever. The slip is carried under m over G, upon which it is pressed by the fork H. In the position shown the paper is in contact with the type wheel

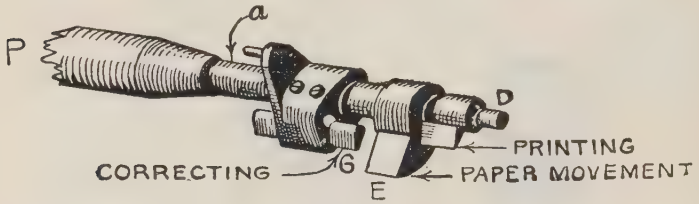

Fig. 307. Printing Axle Cams

due to the cam D having completed rather more than half a revolution. This cam, then, working in the forked end of the printing lever raises the paper against the type wheel whenever the printing axle makes a revolution. It should also be noticed that at the moment of printing the correcting cam is exactly midway between two successive teeth upon the correcting wheel. As it is equal in length to the distance between the teeth, the type wheel is automatically adjusted to obtain clearness of printing.

A revolution of the cam E causes the paper-moving lever I to descend to its lowest, and then to resume its normal position. This downward movement causes the pawl J to turn the ratchet wheel to the required extent, and thus to move the paper forward. As the paper roller is carried upon the printing lever the motion of the paper moving lever does not withdraw the paper from the type wheel. The conformation and positions of the two cams are so designed as to move the paper tape forward at exactly the same speed as the run of the type-wheel as printing is taking place and thus to avoid any slowing effect of the type wheel and yet to obtain a clear impression.

Zero-adjusting Lever. The zero-adjusting lever Z, which

is to be seen in Fig. 308, provides the means of stopping and starting the instruments at zero. It carries two arms, *M* and *N*, the former bearing a wedge-shaped projection.

The click *F* (Fig. 303) which engages with the ratchet wheel *R* carries a pin *q* which normally clears the inclined plane *O* (Fig. 308) carried upon the spring *U*. But when the zero-adjusting lever is depressed the wedge-shaped projection of the arm *M* moves the plane towards the correcting wheel,

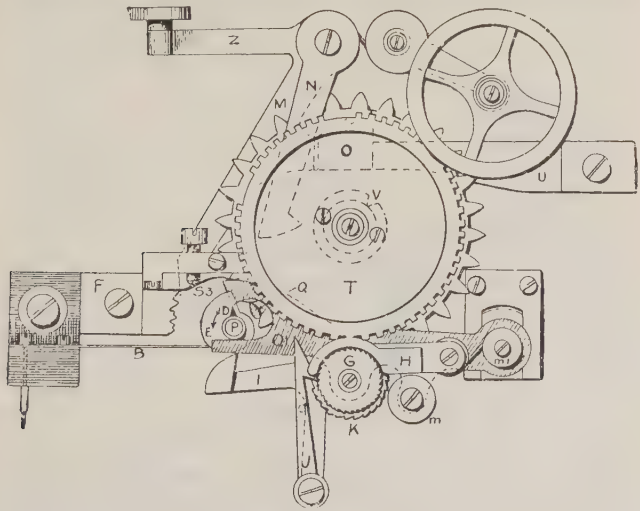

Fig. 308. General Figure of Type, Correcting, and Inking, Wheels and Printing Lever

so that the pin comes into contact with, and rides up, the inclined plane, finally resting in the notch at its apex. This raises the click *F* (Fig. 303) from the ratchet wheel, so uncoupling the correcting and type wheels. The momentum which the combined type and correcting wheels have acquired is sufficient to carry them to such a position that the projection upon the arm *N* (Fig. 308) banks against the forward side of the notch *V*, and the pressure upon the adjusting lever is sufficient to complete the movement already described.

Now the wedge and the inclined plane lock together by means of a suitable catch, and the zero-adjusting key therefore remains depressed. At this point the letter blank portion of the type wheel stands directly above the paper.

If now the letter blank key is depressed a current will be sent out immediately the chariot passes over the letter blank pin. This current causes the printing axle to revolve, and

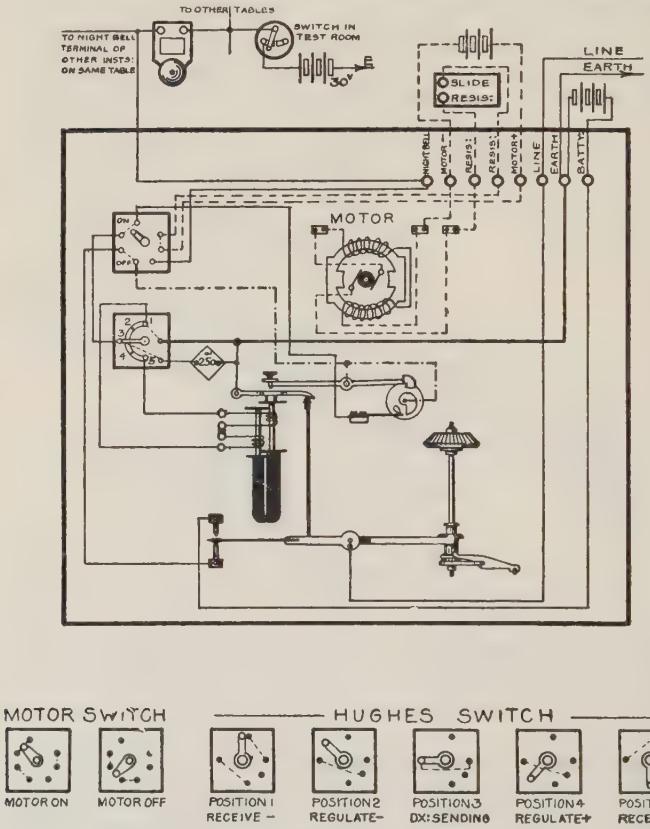

FIG. 309. CONNECTIONS OF A HUGHES SET

to force the correcting cam between the teeth of the correcting wheel, moving it forward sufficiently far to permit the click F to fall upon and engage the ratchet wheel. As the locking between the arm M and the inclined plane O is of a very slight character the release is easily effected, and the pressure of the spring U acting upon the wedge restores the zero-adjusting lever to its normal position.

It will be remembered that the printing at the sending station is effected mechanically by an extension of the chariot contact arm, and reflection will show that if both instruments are stopped by means of the zero-adjusting lever both will be started at the zero position when either station depresses the letter blank key.

Connections. The full connections of a Hughes instrument are depicted in Fig. 309, and it will be noticed that two switches, respectively termed the " Hughes " and " motor " switches, are provided. The functions of each of the five positions of the Hughes switch are shown in the following table—

HUGHES SWITCH

Position of Switch	Functions of Switch in each Position
1. " Receive − " 5. " Receive + "	Determines the direction in which the coils of the electro-magnet are connected between line and earth.
2. " Regulate − " 4. " Regulate + "	Disconnects the coils of the electro-magnet and earths the line through the 250ω resistance coil.
5. " Duplex sending "	Disconnects the coils of the electro-magnet and cuts out the 250ω coil. The line is earthed through the battery coils after each current has been sent out.

When the direction of the current received is such as to increase, instead of to reduce, the magnetism of the electro-magnet cores, the Hughes switch at the receiving end is turned from position 1 to position 5 or vice versa.

The two positions marked " regulate " produce identical connections. The coils are disconnected and the spring in connection with the correcting cam is connected to the armature. In this way a path to earth through the 250ω coil is provided. If the armature is upon the cores the path is through the correcting cam and spring, but if raised then the path is via the armature.

The " duplex sending " position is dealt with under duplex working.

The motor switch, in the " on " position, joins up the motor. In the second position the connections are changed so that the rising of the armature connects the " night bell " terminal to earth, thus providing a calling signal during slack periods.

Practical Operation. Considerable skill is necessary to acquire the correct " touch " to operate the instrument. The

slight further descent of a depressed key, when the rejector pushes the raised pin outwards, apprises the sender that the chariot has transmitted the signal, and in this way the sender is enabled correctly to time the depression and release of the keys. The usual speed of the chariot is 120 revolutions per minute, which at three letters per revolution gives a working speed of 60 words per minute, but in practice the speed may be taken as about 27 words per minute. It should be added that letters should be printed, and synchronizing corrections thereby obtained, as frequently as possible.

A series of conventional signals is arranged to provide calling ("Blank *N*" repeatedly), answering ("Blank, *N* Blank"), operating and adjusting signals, many of which are read by sound and are thus independent of the printing arrangements.*

Before connecting the instrument to line, the electro-magnet is adjusted as described on page 497, and it is ascertained that the speed does not drop when printing five characters ("Blank *E J O T*") during several successive revolutions of the chariot.

The instrument is then connected to line and the distant station sends a succession of "blanks" which, if received as "*A B C D E*" indicate that the home instrument is fast whilst "*Z Y X W*" denote that it is slow. The governor is adjusted until the blanks are received correctly. The line is then disconnected for ten revolutions and if on switching in blanks continue to be received correctly, the speed adjustment is sufficiently accurate.

The final adjustment of the electro-magnet is then made by the passage of working currents ("Blank *I N T*" is employed).

Effects of Retardation. Upon a long circuit there is, of course, a considerable amount of retardation. If the two type wheels both have their blank positions above the paper at the instant when a signal is sent out from the first station a letter will probably be printed at the distant station. This will be due to the fact that during the time taken by the current to appear at the distant end the type wheel is moving forward. The actual time may readily be measured by observing the letters printed when each station alternately depresses the "letter blank key."

* *Technical Instructions VI, The Hughes Type-Printing Telegraph System* (Wyman & Sons) details the conventional signals and gives practical directions for the examination and adjustment of the apparatus.

In practice the sole qualification for satisfactory working is that the currents transmitted shall not merge into one another—the actual time occupied by the current in rising to the value necessary to work the instrument being immaterial. Supposing that the retardation amounted to a quarter of a revolution of the type wheel it will be obvious that the distant type wheel would not be released until a quarter of a revolution later than the sending station's, hence the characters would be received correctly. Upon the other hand, both instruments must be stopped at zero before the direction of sending is changed.

The speed of working, which is directly proportional to the speed at which the chariot revolves, varies with different circuits. Upon a long circuit the speed has to be reduced in order (1) to prevent isolated currents being lost, and (2) to avoid the prolongation of a series of closely spaced currents (e.g. as sent when signalling "*I N T*"). In the second case the successive currents would merge into one another owing to the capacity of the circuit being so large that the earthing of the line is insufficient to clear it of charge. Hence the charge increases in value with each closely spaced current, the final result being that an extra letter or two is printed due to prolongation.*

Hughes Duplex. The Hughes may be duplexed by either the differential or bridge methods, but in the former case a relay must be employed since the Hughes electro-magnet, although possessing two coils, is not differentially wound. With regard to differential working it need only be said that the sending Hughes is connected to the split of a standard relay, and the receiving Hughes with a local battery and a 1000^{ω} resistance coil to *T* and *M*. The duplex balance requires to be extremely accurate, and it is necessary

* If the reader does not follow this statement it is advisable that page 425 should be referred to, since the present case is but an obvious extension of that which has been said in regard to the speed of working upon Wheatstone circuits.

also to reduce the interval of break between the contacts of the sending Hughes to the smallest possible limits. Definite advantage is gained by the use of the 250^{ω} coil which reduces the resistance variation of the receiving instruments in bridge duplex working from 250^{ω} to 125^{ω}.

In both differential and bridge duplex methods a

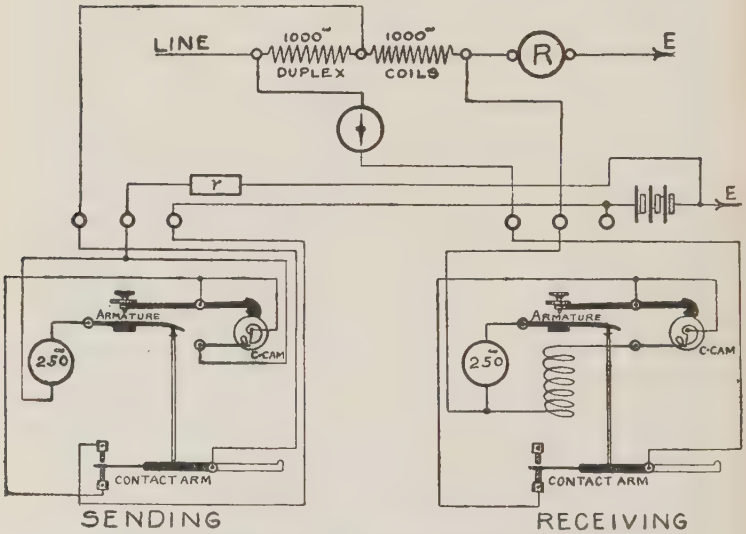

Fig. 310. Principle of Duplex Working and Skeleton Connections

single current sounder is added for balancing and for communicating with the repeater stations. Likewise, a battery resistance coil in which is inserted resistance equal to that of the sending battery is interposed between the lower contact of the sending Hughes and earth (page 279 and Fig. 150).

In the case of inland circuits the speed of working is about 220 letters (120 revolutions of the chariot) per minute. Upon the London-Rome circuit the speed is

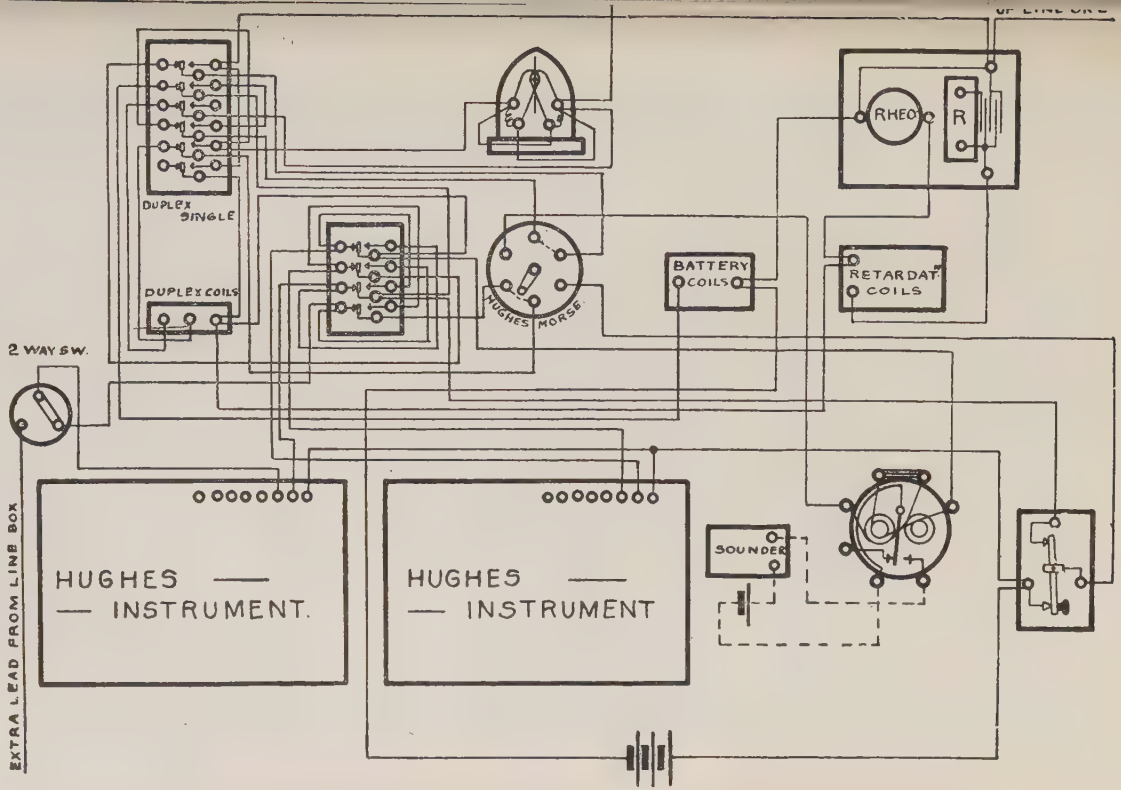

FIG. 311. FULL CONNECTIONS OF DUPLEX SET

An extra differential galvanometer is usually placed in circuit on the extra lead to the line box

about 160 letters, but in this case there are four repeaters in circuit (Paris, Lyons, Turin, and Florence).

Duplex Resistance Coils. The duplex resistance coils are of similar design to those used in connection with Wheatstone circuits, but are wound to a resistance of 1000^{ω} (instead of 3000^{ω}) per coil.

A device which has been employed to substitute signalling condensers is termed an electro-magnetic leak. Upon either side of the duplex resistance coils an earthed electro-magnet is connected. The self-induction produces an effect similar to that of a signalling condenser by offering a very high resistance to the first portion of the sent current, whilst its ohmic resistance only is active when the current has attained a steady state.

The device is in use upon a few Wheatstone worked cable circuits at the repeater stations, but with a somewhat different object. It has not been used to any considerable extent by the Post Office.

The duplex connections are shown in skeleton in Fig. 310 and in full in Fig. 311. The single current sounder apparatus is brought into circuit by turning the 6-terminal 2-position switch to the right. The change from single to duplex is controlled by the 6-bar switch whilst the 4-bar switch crosses over the sending and receiving apparatus.

CHAPTER XV

THE BAUDOT

INTRODUCTORY

THE Baudot is a multiplex printing telegraph system worked double current using a five-unit alphabet in which each letter or character is of equal length and is made up of five equal positive or negative currents, the direction of the five currents determining the character printed.

Multiplex telegraphy* provides two or more channels of communication by giving, successively, the exclusive use of a circuit for equal periods to two or more operators. Its chief advantage is economy in the use of line plant. Additional apparatus, however, is required, involving increased capital and maintenance costs, the latter item including the cost of skilled attention by a body of trained telegraphists (dirigeurs). Economically, a multiplex installation is not justified where short circuits are involved and lines are available. In such circumstances the annual charges for additional line plant would be relatively small and direct printing machines, each working as an independent circuit, would be provided.

The component parts of the Baudot are the keyboard (Fig. 312), the distributor, and the receiver (Fig. 313), (colloquially called the "trad," derived from the French *traducteur*).

Each operator has a keyboard furnished with five keys, and in order to signal any particular letter, the keys are simultaneously depressed in the appropriate combination. The position of the keys determines the direction of the five successive currents sent over the

* "The Historical Basis of Modern Printing Telegraphy," by H. H. Harrison, I.P.O.E.E. paper No. 59. 19th April, 1915.

line. Those that have been depressed send out "marking" currents to actuate one or more of the five corresponding electro-magnets at the receiving end, these being indirectly associated with the arriving line signals at the proper time. In this way the position of

Fig. 312. Baudot Keyboard

the sending keys is reproduced by the armatures of the receiving electro-magnets. The actuation of the armatures sets up a train of purely mechanical movements which selects and prints the character on a gummed tape $\frac{3}{4}$ in. in width, feeds the tape forward, and returns the armatures to their normal positions. The time in which the five current impulses can be signalled, even over lines of considerable length, is far less than that

required by an operator to form the combination corresponding to the letter to be sent. The permutations of five currents are, therefore, transmitted rapidly, and the idle line time during which the operator is forming or setting up the next letter combination is used to

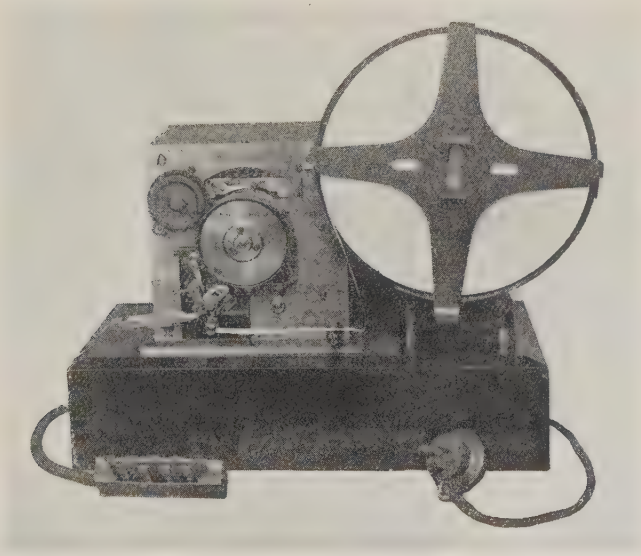

Fig. 313. Baudot Receiver

transmit other sequences of five currents set up by other operators.

The five-unit code with keys having two positions (normal and depressed) allows $32(2^5)$ possible combinations and provides a signal alphabet very much shorter than the Morse code. Taking an average text, the five units compare with an average of eight for Morse code and, consequently, a higher speed of working in that ratio is obtainable on circuits where the line speed is limited by attenuation. An example of the word London in both codes is shown in Fig. 314. As all

characters in the five-unit code are of equal length there is no necessity for a spacing signal between each letter of a word or group.

Since the five currents composing each letter are transmitted to line successively from the keyboards, it is essential that each operator shall form his signals at the correct time, and this is accomplished by giving an audible signal—"the cadence." Manipulation is therefore limited to a definite unvarying rhythmic speed of signalling (generally 180 letters per minute).

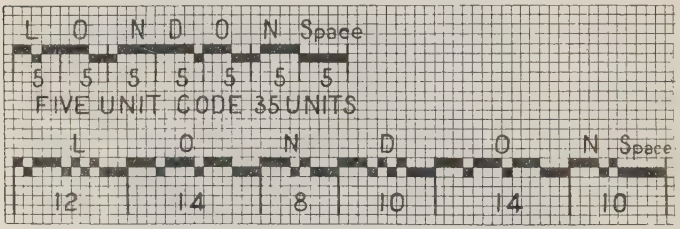

Fig. 314. Five-Unit and Morse Codes Compared

A higher rate of signalling can be attained by using a typewriter keyboard to perforate a tape which passes through a transmitter. In this way, the signals are stored and are then sent out at the correct moment by the transmitter which is controlled by the multiplex apparatus. Hence, the operator may vary the rate of perforating at will, with a corresponding reduction in the human effort, and the advantage that a single key only has to be depressed to form each character.

The Baudot system enables from two to six operators to work over a single line connecting two stations, the arrangements being respectively termed Baudot double, triple, quadruple, quintuple, and sextuple. On a simplex installation, channels may be worked in each direction according to the incidence of traffic, e.g. two in each direction or three in one direction and one in

the other on a quadruple simplex set. The system can also be applied to extended circuits; for example, a single wire connecting A, B, and C can be used to give two channels to each: A to B, B to C, A to C—in fact, the facilities which can be secured are quite equal to those afforded by the Morse quadruplex system. Repeaters and retransmitters can be inserted in a Baudot circuit with great advantage on very long lines.

Simplex Baudot circuits are not used in the British inland service, but a few are worked between London and France.

Duplex Baudot working was introduced by A. C. Booth, giving double duplex, triple duplex, quadruple duplex, quintuple duplex, and sextuple duplex. With the sextuple duplex there are therefore six channels in each direction, and twelve messages are sent simultaneously over a single wire. It is on record that a London-Birmingham sextuple duplex set carried 849 messages in an hour and 8,000 in the day.

Principle of Multiplex Illustrated. The working of a multiplex system may be illustrated by the analogy of a Wheatstone circuit. Suppose that ten punchers each perforate slip at the rate of 20 words a minute. Ignoring loss of time in collecting the slip, a transmitter running at $10 \times 20 = 200$ words per minute will suffice to carry the traffic. At the receiving station assume that ten writers are transcribing the slip at 20 words per minute. With some small staff addition at the receiving end and a somewhat higher speed than 200 words per minute this would approximate to actual conditions. Let it be assumed also that the work of each puncher is collected in consecutive order at six-minute intervals and that the transmitter is running continuously; the staff of ten to be arranged in relay—a fresh telegraphist at six-minute intervals, then an hour's transmission would be made up by a sequence of messages from punchers 1–10. Similarly, the distribution of slip at six-minute intervals to the succession

of writers would ensure that transcription kept pace with the rate of transmission. Each puncher has the exclusive use of the transmitter in turn for a period of six minutes. In effect, therefore, ten individual senders are linked to ten individual receivers as in the multiplex system. Actually, the perforated slip represents the storage of signals in bulk since the tape on passing through the transmitter reproduces the dots and dashes previously punched. In multiplex working the line is allotted to a number of senders in succession, but the signals are transmitted letter by letter in manual working, there is no storage of signals. In the case of a quadruple multiplex (four channels) it is evident that the signals are passing over the line at four times the speed of working of an individual sender. Since each channel operates at the rate of 180 letters per minute the line speed is 720 letters per minute.

It is imperative that each sender's keys should be in the operated position when the line is allotted to the particular channel in each rotation so that the distribution of the signals to receiving apparatus at the distant station may follow a given order. To secure this, the keys, when depressed, are locked by mechanical means until the line connection has been made. The release of the keys is accompanied by an audible signal, the "cadence." The sender forms another combination immediately the keys are released, and by observing the cadence the correct sequence of sending channels is secured: 180 revolutions per minute is the standard speed for a manual Baudot. Each rotation thus occupies one-third of a second, and each sender on a quadruple set is joined to line for one-twelfth second ($\frac{1}{4} \times \frac{1}{3}$) and has three-twelfths of a second to form the combination. Short as this period of time appears, after a few weeks' experience, a sender has no difficulty in keeping in step, in fact, it has been found possible to operate at 240 revolutions per minute, while 210 is used on a number of manual circuits in France. It is

necessary also that the four receivers shall be in step, individually, with the four senders. The principle is that of two clocks with hands moving at the same speed and pointing to the same time at each moment. In effect, distributors are clocks with one main hand, moving at the rate of 180 r.p.m., the hands indicating the same time at each moment. Visualize a distributor thus, and it will be realized that the first sender has the equivalent of 12 to 3, the second 3 to 6, the third 6 to 9, and the fourth 9 to 12. The four receivers are, of course, linked in the same order during the same periods. Clocks set to run at this speed, for hours on end, would not maintain their accuracy and a method of correction is essential. In practice, the speed of the clocks (distributors) is adjusted so that one has a very slight gaining rate. Mechanism is introduced in this clock to verify the position of the hand each revolution and to set back the hand slightly if necessary.

The accuracy required to attain this condition is readily obtainable. In theory, a clock and a distributor are identical, hence, the best method of adjustment is by moving the hands to bring the time to correctness rather than to vary the speed of the clock. Translated into the corresponding terms of multiplex working, the correction of the distributor at the corrected station should be made by arresting the movement of the hand and not by varying the speed of the distributor. Hence, the reed which determines the speed of the distributor and corresponds to the pendulum of a clock should only be used to obtain the desired speed. The correction of the position of the distributor brushes should be effected through a gear (actually an epicyclic gear) which arrests the brushes by a definite known small angular amount to bring them into phase or synchronism.

Correction will, however, receive more detailed consideration later, for the purpose of the present explanation it is assumed that the two distributors move in

precise and accurate step or "in unison"* to use the appropriate technical term. An elementary quadruple multiplex is illustrated in Fig. 315. The rotating arms each carry a pair of brushes, connected electrically to each other, but insulated from the arm. Their purpose is to make good connection between the solid and segmented metallic rings. When key 1 at *A* is joined to line, segment 1 at *B* is connected to *S* or *M* of the relay and key 1, if depressed, will operate the receiving electro-magnet at *B*. Thus, the position of the five keys of the keyboard at *A* will be reproduced n the position of the armatures of the receiving electromagnets at *B* and by a train of purely mechanical movements any particular character is printed at *B*. The order in which the keys are numbered in Fig. 315 is that adopted in the Baudot system.

In the illustration, five segments take up a quarter of the ring, but it will be understood that by increasing or decreasing the size of the segments any desired number of groups of five segments may be formed. The length and character of the circuit limits the number of channels it is possible to work, since the number of segments determines the contact time of a key and the line. Where circuits contain a long submarine cable only two or three channels are possible, but between inland centres five or six can be operated. The standard installation in the British Post Office is a quadruple duplex. In America, a triple duplex is the standard, opinion being that it is better and more economical to work a small number of channels at a speed consistent with a high degree of stability and approximating to the capacity of the best operators rather than to work a larger number of channels at relatively

* The term "in synchronism" (i.e. identity of speed and phase at each moment) is very generally employed, but as the distributor at the sending station leads and controls the distributor at the receiving station, the term "in unison" is to be preferred to denote identity of speed with a constant phase difference.

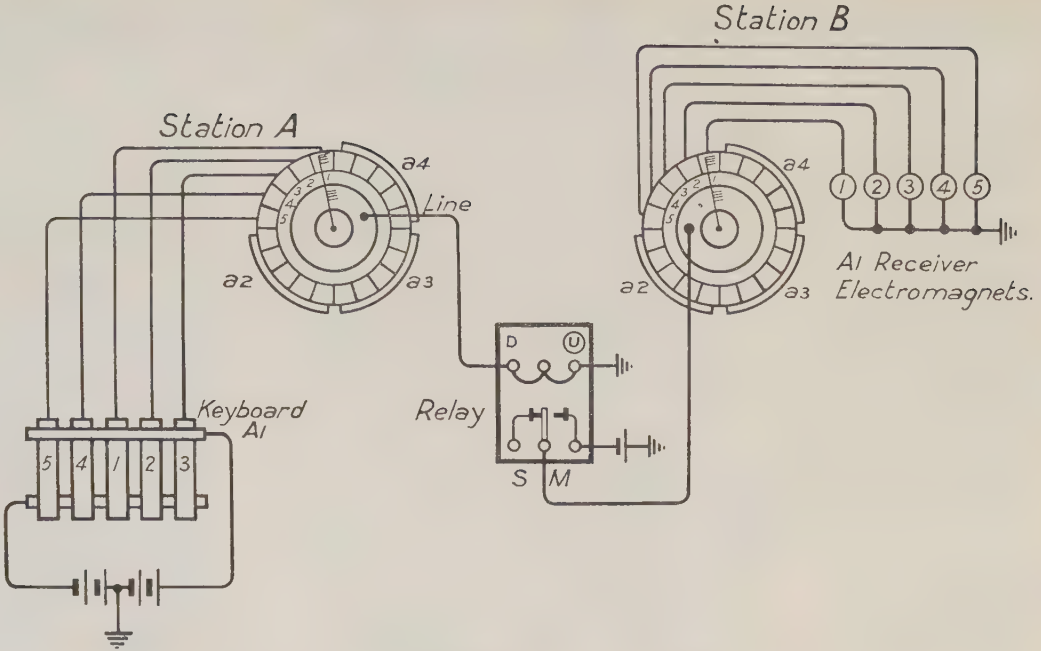

Fig. 315. Elementary Baudot Circuit

low speed. It is possible that the British Post Office will move in this direction.

Keyboard Manipulation. The manipulation tables are shown in Fig. 316. Table A is in use for Continental circuits and Table B for inland working. It will be seen that a number of characters in the former have been replaced by fractional parts which are of greater service for commercial purposes. The first three fingers

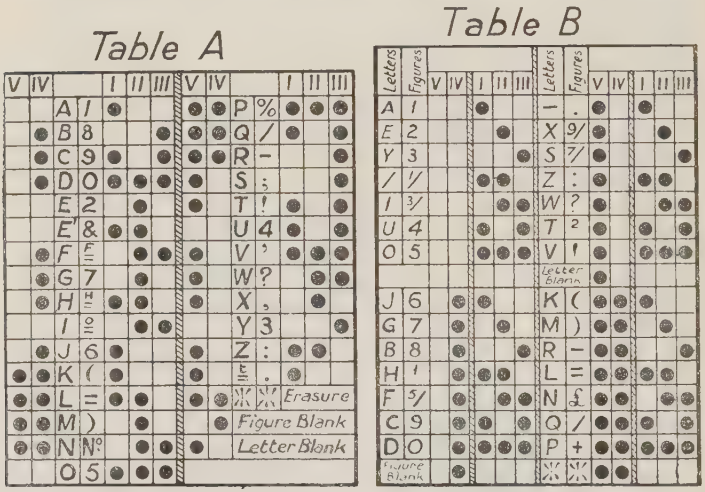

Continental Circuits Inland Circuits

FIG. 316. MANIPULATION TABLES

of the right hand are used for keys 1, 2, 3, and the first two fingers of the left hand for keys 4 and 5.

Letter and figure characters alternate on the type wheel of the receiver, and the wheel is brought into position to print a letter or figure as desired by means of a shift signal. Any signal sent after the figure blank (fourth key) has been depressed will place the type wheel for printing figure characters. The letter blank (fifth key) should be depressed when letters are signalled after figures.

A sectional view of the keyboard is shown in Fig. 317. The case is of polished teak measuring 7 × 6 in. at the base. Formerly, the wiring from the keyboard was carried by means of a connector and cord fixed to the back of the keyboard. The latest type is fitted with a

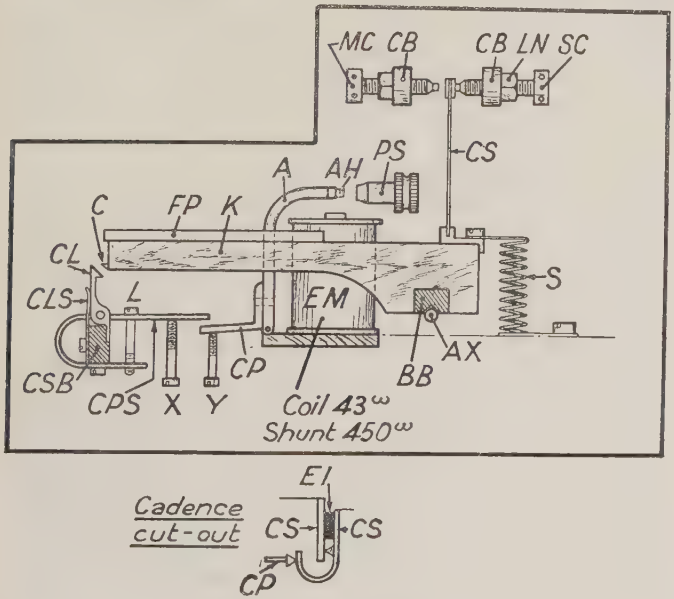

Fig. 317. Keyboard Sectional View

nine-pin plug and cord as shown in Fig. 312. A jack to accommodate the plug is fitted on the instrument table behind the keyboard. If a fault is suspected a keyboard can be changed almost instantaneously by this arrangement. The spring contacts in the jack are arranged in such a way that when the keyboard plug is withdrawn the spacing battery is connected to the five corresponding segments of the distributor. In the absence of this provision the duplex balance at the distant station would be upset when the path of the line current

through the keyboard was disconnected by withdrawal of a plug.

The five keys, a section of one of which *K* is shown in Fig. 317, are of birch wood, each provided with an ivory finger plate *FP*. The first, second, and third keys are separated from the fourth and fifth by a teak spacing block which is bored to allow access to the locking screw *L*. On the underside of the key near the rear end a brass balance block *BB* with a triangular recess rests upon the rustless steel axle *AX*, this forms the pivot of the key. The inner end of the key is connected to a strong spiral spring *S* which exerts a downward pull and maintains the necessary pressure between the spacing contact *SC* and the contact spring *CS* when the key is at rest. The upright contact springs are fixed at right angles to the keys and are tipped with gold-silver contacts.

The five spacing and marking contact screws are carried by brass contact bridges *CB*. Each contact screw is adjustable in relation to *CS* and is provided with a locking nut *LN* to secure stability of adjustment. The arrangement consists, electrically, of five separate single current keys. The electrical circuit is from *CB* to *CS*, through *S* to the nine-pin plug and jack thence to five segments on the distributor ring. It should be noted that the numbering of the keys corresponds to the fingers used in manipulation, but the five segments on the distributor are numbered in arithmetical sequence. The front of each key is furnished with a small steel catch *C* on the underside. In the rest position the catch is slightly above a click *CL* at the back of which is fixed a flat spring *CLS*. The click rides free on its pivot and is kept in its upright position by the flat spring. When the key is depressed the catch passes below the lip of the click and is retained, so that the key is locked, *CS* now making contact with *MC*. By this means the voltage impressed on the segment is changed from spacing to marking. When the brush

reaches the segment, therefore, a current of full segmental duration passes to the line relay via the solid ring brush. Without a locking arrangement the time contact of the contact spring would be precarious. After the brush has passed the relative segments a current is sent from a segment of a local ring on the distributor through the cadence electro-magnet *EM*. The armature *A* of *EM* is shaped to curve over the pole-piece and carries the cadence hammer *AH*. The armature also carries at the other extreme a cock piece *CP* which acts upon the cock-piece spring *CPS*. The position of both cock piece and spring is adjusted by means of screws *X* and *Y* which are carried by the base of the keyboard.

The five clicks are mounted on a common bar *CSB* which is pivoted at each side of the keyboard. A small helical spring threads over the right-hand end of *CSB*, by means of its torsion an inward pressure is applied to the common bar and hence to the clicks. The underpart of the cock-piece spring *CPS* is also attached to the common bar. The passage of the cadence current, by means of the armature hammer *AH* striking the pillar stop *PS*, produces the audible cadence signal warning the operator to set the next combination. The attraction of the armature tilts the cock piece, thus throwing the clicks outward and unlocking the keys, which are restored smartly to the spacing contact by the strong spring *S*. By means of the locking screw *L* the relationship between the clicks and catches can be altered slightly. The movement, however, is collective not individual. A very slight turn given to *L* in a clockwise direction will throw the clicks outwards or *decrease* the locking. Right turn decreases—*RD*. An anti-clockwise turn has, of course, an opposite effect.

The circuit of the cadence electro-magnet includes two flat springs *CS* separated by a strip of ebonite *EI*; normally these are in contact, but the closing of the

lower lid of the keyboard opens the contact by means of a projecting pin *CP*. When the channel is out of

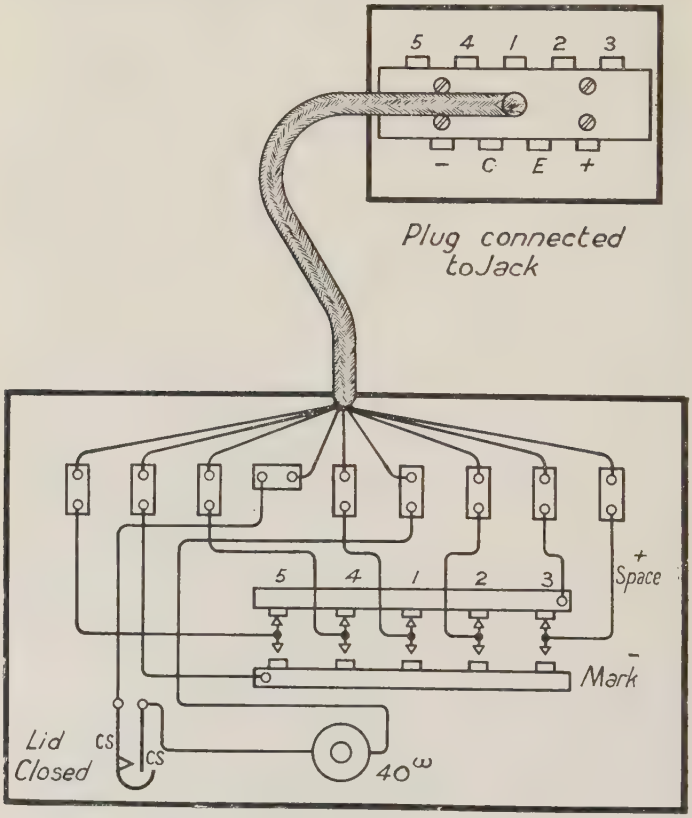

Fig. 318. Keyboard Electrical Connections

use the lid is closed and the cadence signal ceases. The room is quieter, wear and tear is avoided and, most important, the adjustment stands for a longer period.

The electrical connections of the key are shown in Fig. 318.

Keyboard Adjustment. Only slight readjustment of the locking screw and contacts is usually required in day-to-day maintenance, but occasionally a keyboard requires a thorough overhaul by a mechanic, in such case the standard conditions should be verified.

(*a*) *Key Levers.* Remove the lower lid of the keyboard and the contact bridges. The action of individual keys can then be seen. After depression, a key should rise freely and fully in response to the action of the antagonistic spring *S*. If the spring is out of position it will impart a sidewise pull to the key whereas the keys should lie parallel to each other. The key will be stiff in action if the sides of the brass balance block are at all rough or are bound in the bearing as the result of dust. The cheeks should be cleaned with fine emery paper and also the crutch until the key is quite free in action. The key when depressed should pass just below the lip of the click. When this clearance has been verified the marking contact screw should be advanced until contact with the spring is good and a suitable play of not less than one thirty-second of an inch exists. Any day to day adjustment of the contacts should be made by means of the marking screw. A correct adjustment results in a slight bend of the vertical spring in either position of the key.

(*b*) *Cadence Magnet Armature and Stop.* Retract the adjustable stop until the armature just touches the core of the magnet when pressed forward. Then advance the stop until a slight air gap exists between armature and core, when the stop should be clamped. There should be $\frac{1}{8}$ in. clearance between the armature and stop when the armature is at rest, the distance is varied by means of the screw *Y* acting upon the cock piece. It is important that there should be a clearance of about $\frac{1}{32}$ in. between the cock piece and its spring. Unsatisfactory cadence action arises if they are too close to each other. The position is regulated by means of screw *X*.

(*c*) *Contact Adjustment.* A good adjustment is secured when reliable electrical contact is made between the contact spring and spacing contact screw while the finger plate rests gently against the strip of cloth attached to the case. The object of the cloth is to damp out any tendency to vibration. The spacing contact screw should be advanced until good contact is made with the vertical spring. If it is advanced too far the tension will act in opposition to the spiral spring and a bouncing contact results. If the cloth strip becomes worn unevenly the key levels will vary and trouble may arise, the cloth strip should be renewed when necessary.

(*d*) *Locking Adjustment.* The locking screw *L* enables the

click bar and its parts to be moved as a whole, a slight turn of L in either direction produces a considerable displacement of the clicks. With the armature in its rest position L should be turned until each key is held by the click when depressed. Carry the armature forward by hand and the keys should all unlock. It is not essential that the release of the keys should take place at the same instant, as there are variations in catches and clicks sufficient to prevent this. Trouble with an individual click may be due to dirt working between it and the spring backing, or the spring pressure being weak owing to the screw working loose.

The Receiver. (Fig. 313.) The power required to drive the receiver is provided by a small electric motor. It is connected by means of a three-pin plug and socket, either to the secondary cell installation of the office, or to the public power supply. The third point is used to earth the frame of the motor. The use of suitable lamp resistances enables practically any power supply up to 250^{v} to be used.

It is preferable to use the secondary cells if the batteries can carry the load since interruption of a public supply is by no means a rare event. The stoppage of a Baudot circuit, with its great traffic carrying capacity, is a very serious matter during the busy hours of the day. A short stoppage of four duplex channels may result in delay to messages and disorganization of the office routine long after the interruption. Even if additional battery plant is necessary the outlay is usually justified.

Electrical Operation of Receiver. The electrical part of reception is confined to the operation of five electromagnets the armatures of which reproduce the positions of the five sending keys.

Mechanical Operation of Receiver. The movement of the armatures is communicated by purely mechanical means to five selectors. Beneath the feet of the selectors the thirty-one working combinations of the five-unit code are passed in succession. When the combination corresponding to the setting of the selectors

is reached, an engagement takes place which results in the release of the printing parts and the appropriate character is printed on the gummed tape. Replacing cams restore the moving parts to normal, after their function has been performed, ready to repeat the process for the next combination.

Speed of Receiver. The speed of the receiver when running should be the same as that of the distributor, but need only be sufficiently constant to avoid reception of signals when mechanical parts might interfere

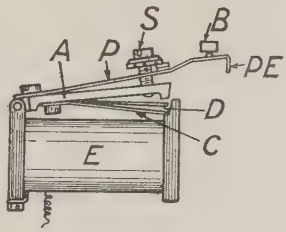

FIG. 319. SELECTOR ELECTRO-MAGNET

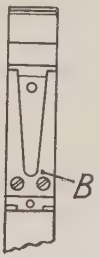

FIG. 319*a*. ARMATURE FROM BELOW

with them. The speed is sufficiently controlled by a local current sent from two segments of the local ring of the distributor once per revolution. Its circuit includes a braking electro-magnet and a make-and-break contact which is closed once per revolution of the receiver main axle. The arrangement will receive detailed attention later, but it is necessary at this stage to appreciate the relationship existing between the distributor and the receiver. Unlike the two distributors on a circuit which may not vary their phase relationship more than 2°, the receivers may vary as much as 90°.

Receiver Electro-magnets. The five receiving electro-magnets *E* (Fig. 319) are precisely alike, and are placed side by side at the top of the receiver. The coil is wound to a resistance of 40 ohms shunted by 200 ohms.

The shunt prevents sparking at the segments of the distributor. The soft iron armature *A* is hinged on the back pole-piece. A bifurcated brass spring *B* (Fig. 319*a*) is screwed to the underside of the armature. One leg of the spring *C* (Fig. 319) lies along the armature for its full length, preventing direct contact between the armature and the front pole-piece. The object of this is to prevent the formation of a closed magnetic circuit with resultant sticking of the armature. The air-gap should not exceed 70 mils. The other limb of the spring *D* is bent to form a curve and acts as an antagonistic spring, restoring the armature to normal after the passage of a current. Attached to the armature on the upper side is a bent brass piece *P*, known as " the appendix," it is adjustable by means of a screw *S*. The screw is serrated beneath and engages a knife-edged pin on *P*. The object of the pin is to prevent the screw shifting once the proper adjustment has been made. As the armature acts as a hammer, its continued operation would loosen *S*. The screw adjustment is provided to regulate the position of the bent end of the appendix *PE* with respect to the selector lever. The play of the armature and, consequently, of the appendix, is limited by means of a crossbar *B*, placed above the five armatures. It is clamped at each of its ends to the frame supporting the electro-magnets.

A vertical spring *VS* (Fig. 320), notched at its upper end, is situated immediately in front of each electro-magnet. It is screwed to the frame carrying the electro-magnets by means of two screws passing through a shaped piece *SP*, which provides a means of adjusting the upright position of the spring. In front of the vertical springs are five selector levers *L* shaped somewhat like an inverted L. The short horizontal end of a lever rests normally in the notch of the vertical spring *VS*. The currents come in consecutively from the distributor ring as the brush rotates, energizing the electro-magnets in successive order according to the

number of marking currents. The attraction of the armature and appendix results in the bent end of the latter striking the selector lever and displacing it from its position, carrying it below the notch of the upright

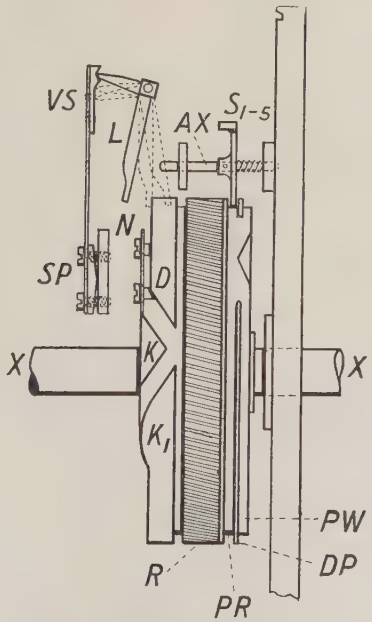

Fig. 320. Selecting Mechanism

spring. The foot of the selector lever, which normally just clears a rotating shuttle cam, now projects into its path, it is guided by a projection N and carried round cam K. The selector lever during its passage behind K brings pressure to bear upon the axle of a selector AX, pushing it to the right through the gap shown between the two discs of the combiner from path PR to path PW.

After passing the shuttle, K^1 replaces the selector lever so that its upper end again engages the notch

of the upright spring. The purpose of these comparatively elaborate arrangements is to secure rapidity and certainty of action. The current impulses from the distributor are very short, necessarily less than $\frac{1}{6}\frac{1}{6}$ sec., and are used only to determine the position of the appendix.

Similar results have been obtained by trigger devices, where the movement of the armature releases a spring-driven trigger which applies adequate force to the selector axle to move it from the spacing to the marking position. Figs. 321 and 322 illustrate the skeleton rapide receiver and Carpentier's rapide receiver. These are self-explanatory, if studied in connection with Fig. 320. Practically all the receivers in use, however, are of the pattern already described. To grasp the further stages of selection it is necessary to study the system of moving wheels (Fig. 320). To the front of the gear wheel R are attached two steel discs PR and PW, divided by a thin steel plate DP. This combination is known as "the combiner" wheel. To the other side of R is fixed a stout disc D carrying the shuttle and cams K, K^1. This system of wheels rotates in a clockwise direction. Immediately above the rotating system is a frame (Fig. 323) carrying six levers, five, "the selectors," $S^{1\text{-}5}$ have the lower ends extended and shaped to form a foot (Fig. 323*a*), the sixth, known as the "tension lever" or "printing head," PH has no lower extension.

The axles of the selectors are at a right angle to the heads and pass through and beyond the selector frame. The heads of the selectors S^1 to S^5 form with PH, an arc, each one touching its neighbour. The sixth head exerts a right-hand pressure upon the selectors and in this way their heads are held in contact with one another. The selectors are capable of an individual movement backward and forward, but lateral movement can only take place collectively and in conjunction with the tension lever. The heads are

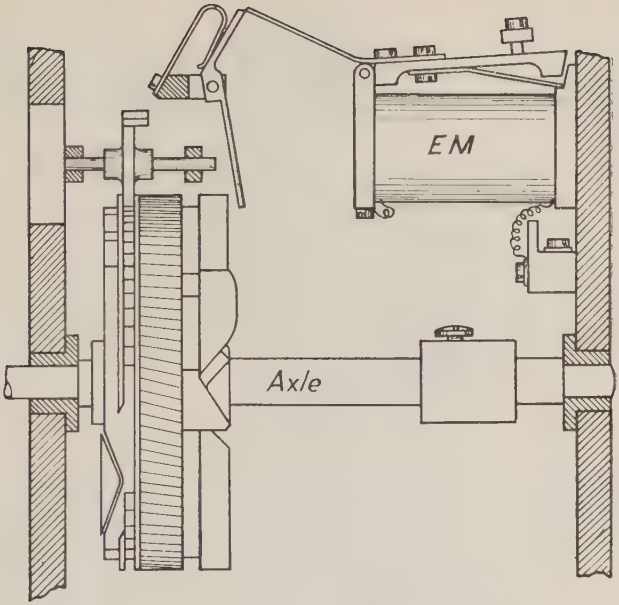

Fig. 321. Skeleton Rapide Receiver

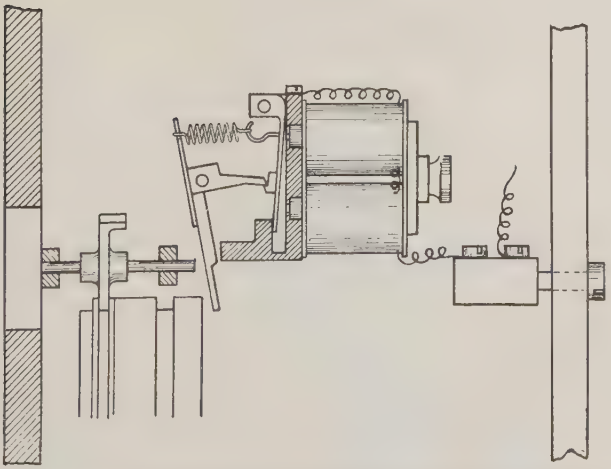

Fig. 322. Carpentier's Rapide Receiver Electro-magnet

made sufficiently deep to support the heads of adjacent selectors even when at the limit of their forward movement. This will be clear from Fig. 323 where S^1 and

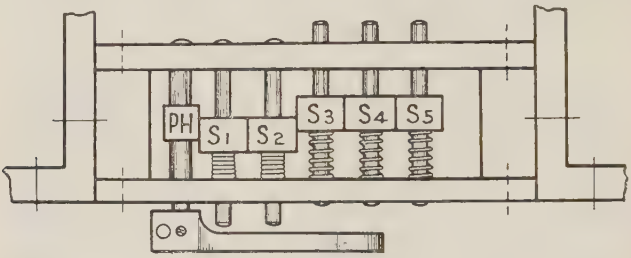

Fig. 323. Selectors in Frame

S^2 have been actuated. The amount of movement is sufficient to allow the feet of the selectors to rest above either of the two steel discs *PR* or *PW*. When the receiver is idle the feet lie along *PR* (the path of rest). In the periphery of the discs a number of shallow pockets are cut, bearing a certain relationship to each other. Where a blank occurs in *PR* a pocket is placed in *PW* (the path of work). This arrangement is clearly shown in Fig. 324. Thus, the thirty-one required combinations of the five-unit code are provided for by two discs. Pockets in *PR* correspond to spacing currents and pockets in *PW* to marking currents. While one or more of the selector feet rest upon a blank portion in either track of the combiner wheel no *collective* movement of the selectors can occur. When a position is found in which the five feet are all accommodated by pockets, they drop in owing to the right-hand pressure

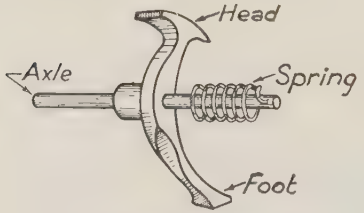

Fig. 323*a*. Selector

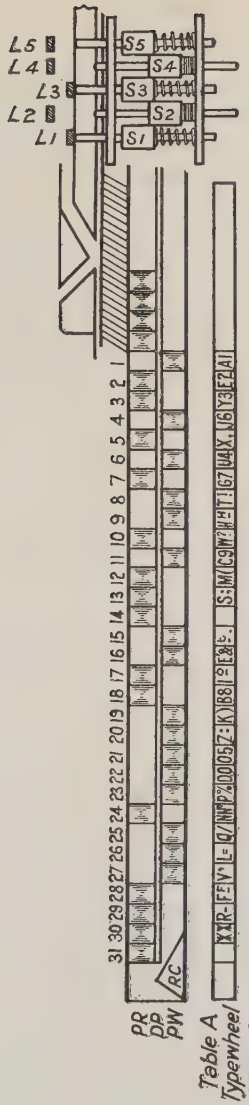

Fig. 324. Peripheries of Combiner and Typewheels

brought to bear upon their heads by the tension lever. The forward movement of the combiner wheel, however, immediately ejects the feet with a sharp jerk, due to one or more of the feet meeting the raised sections intervening between the pockets. The jerk is communicated to the heads, which now overshoot their normal position to the left. This overshoot movement, as will be shown, releases the printing mechanism and the tape is brought into contact with the typewheel at the instant when the selected character is in a position to print. At every revolution, after the release of the printing mechanism, the selectors in *PW* are returned to *PR* by the cam *RC*.

It has been shown that the selector levers are operated in response to marking currents, so that pressure is brought to bear upon the axles of the selectors. It is arranged that at the moment pressure is applied to the axle the selector foot is opposite the opening through the dividing plate shown in Fig. 320 and passes over from *PR* to *PW*. It will be seen from Fig. 324 that there is no part of *PR* where five successive pockets occur and, therefore, no printing takes place until one or more of the selectors are operated as the result of marking currents.

The axle of the tension lever *PH* (Fig. 325) passes through the front plate of the receiver and carries the propulsion lever *PL* and a strong steel spring *S* the tension of which can be adjusted by means of the screw *AS*. The propulsion lever carries a socket *K* into which the releasing rod *R* is screwed. At the lower end of *R* the releasing lever *P* is connected by means of a crank *C*. The free end of the releasing lever is poised above the horizontal part of the locking lever *LL* which is pivoted at *LP* and held in position by a spring *F*. A catch at the upper end of *LL* engages a projection on the impression cam *CA* holding it in the rest position against the tension of a strong spring *U* carried by the cock *CK*. The sequence of movements

is, therefore, as follows: *PH* is jerked to the left by the expulsion of the selector feet. The right-hand extremity of *PL* is raised, drawing *R* up and jerking the head of *P* downwards, giving a tap to the horizontal end of *LL*. This frees the impression cam from the catch,

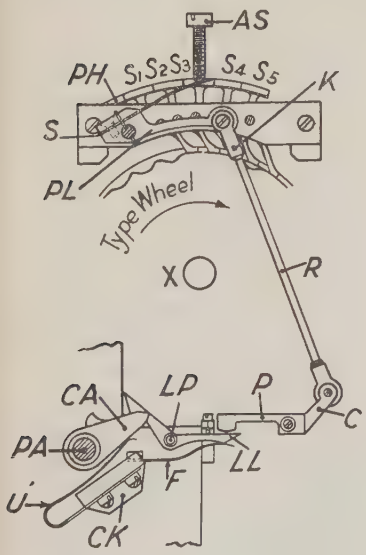

Fig. 325. Releasing Mechanism

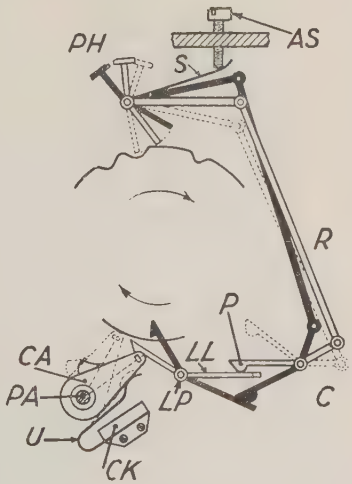

Fig. 326. Travel of Releasing Mechanism

allowing it to rise and bring the printing roller into contact with the revolving typewheel.

The skeleton sketch (Fig. 326) will serve to correlate the actual mechanism with its functional movements. In addition to printing the character the mechanism must move the tape forward the space of one letter and restore the impression cam to its position of rest.

These operations are performed by the printing arm *PA* and a replacing lever. The component parts of the printing arm are shown in Fig. 327. The printing

arm paper guide T is merely a steel pin. The printing roller R has a packing of gutta-percha to provide a suitable pad for printing. The paper-moving roller PM, the circumference of which has brass rims with small teeth at each end, also carries a ratchet wheel RW at its inner end. The impression cam IC is shaped to provide a catch at CA and a cushion at CU. A click is held in position by the flat spring C, it rests on a tooth of the ratchet. These parts move as a whole. Below the printing arm a cock piece CK (Fig. 328) is attached to the frame. It carries a strong U spring, a click CL engaging the underside of the ratchet, and a bent spring BS holding the click in position. To assure an even paper feed and to keep it taut, preventing irregularity of spacing in the print, a flexible steel guard is fitted to the paper wheel on the delivery side, its gentle pressure steadies any tendency of the paper to unwind too freely. The paper then passes through a wire loop extension of a spiral spring and round a brass paper guide BG. These parts are carried by the receiver frame. Doubling back, the paper threads over T round R, and over PM, being pressed on to the small teeth by a brass cylinder C attached to a lever L carrying a spiral spring S and a handle H. It then passes down a shallow chute SH. The engagement of the locking lever and impression cam holds the printing arm free of the rotating typewheel when printing is not taking place. The ratchet is rotated forward by the click beneath C (Fig. 327) while the under click on the cock piece prevents any backward movement. When the printing arm is released by the operation of the locking lever the spring U (Fig. 328) throws the arm upwards. The

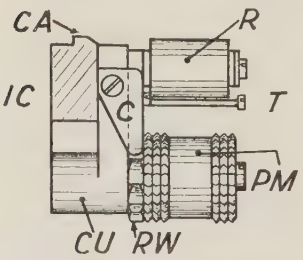

Fig. 327. Printing Arm

top click accompanies the ratchet in its travel, whilst the bottom click, carried by the cock piece, is forced aside to allow a tooth to pass. The point of the

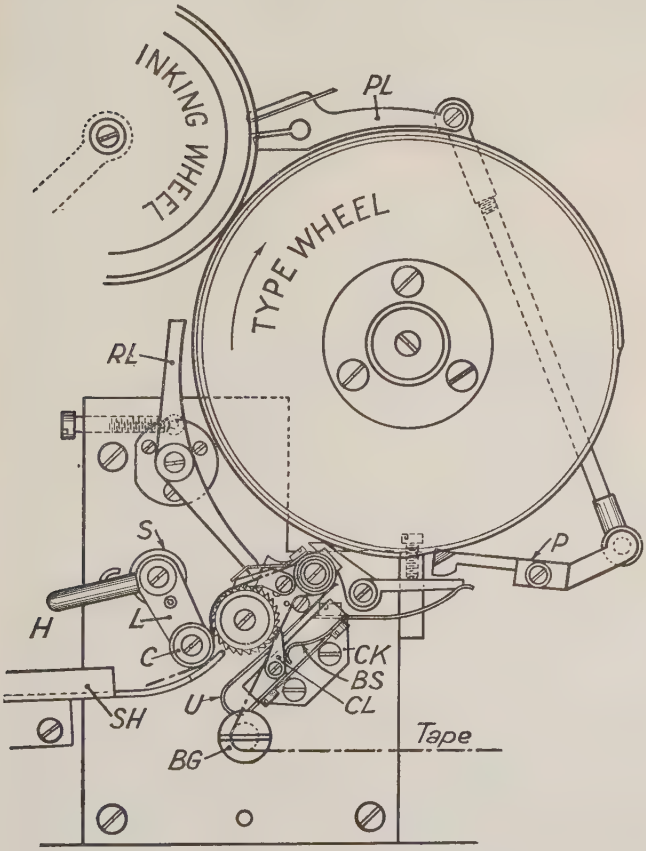

Fig. 328. Typewheel, Printing Arm, and Paper Movement

impression cam enters into a slot of the impression wheel, thus holding the printing arm steady so that the character is printed evenly on the tape. The printing

arm is carried forward by the impression wheel until it is clear of the type wheel. At this point a roller on the rear of the impression wheel operates the upper end of a replacing lever *RL*, throwing the lower arm against the corner of the impression cam, thus replacing the printing arm. The replacement occurs while the blank portion of the typewheel is passing. The bottom click *CL* prevents movement of the ratchet during return of the printing arm. The top click is therefore forced to allow a tooth to pass. This results in the printing roller and paper being advanced by the space of one letter each time the printing arm is released.

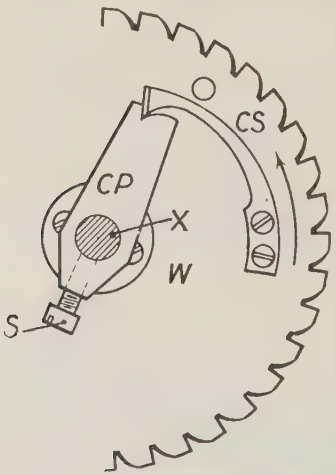

FIG. 329. IMPRESSION WHEEL, ATTACHMENT TO AXLE

Typewheel Fittings. The main axle *X* of the receiver (Fig. 329) extends through the front plate and carries a sleeve. A clutch piece *CP* with a *V* notch at its extremity is clamped to the sleeve by a screw *S*. This engages with a spring *CS* on the back of the impression wheel *W*. The periphery of *W* has 31 indentations, spaced 9 degrees apart. The front of the impression wheel has two figure changing plates *F* and *L* (Fig. 330) and a figure changing click *C*. The plates are capable of slight movement, and the rounded free end can occupy a position clear of the indentations of *W* or partly covering them.

The typewheel is engraved with fifty-seven characters spaced $4\frac{1}{2}$ degrees apart with the letters and figures placed alternately. Fitted over the sleeve extension of the axle *XS* (Fig. 331) is a larger sleeve *LS*. The

typewheel TW is carried at the outer end of LS: at the inner end a three-limbed figure changing lever known as "the spider" SP (Fig. 330) is fitted. The position of the typewheel in relation to the impression wheel is capable of slight adjustment by means of screws AS

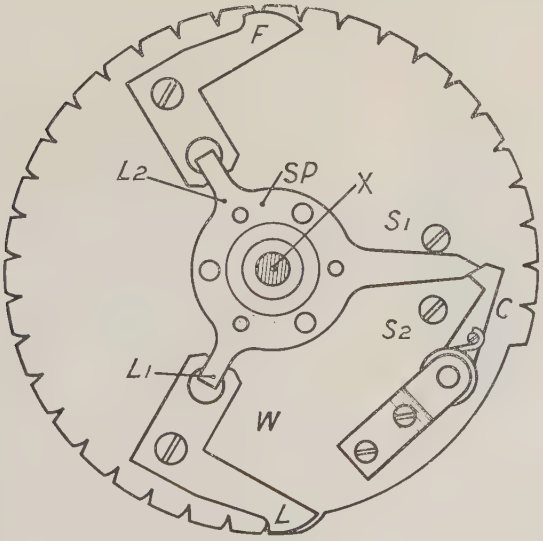

FIG. 330. IMPRESSION WHEEL, FIGURE CHANGING PLATES AND SPIDER

(Fig. 331) passing through slightly oval holes. TW, LS, and SP slide upon the axle over the sleeve XS and engage the impression wheel W by the short limbs L_1 L_2 of SP entering the claws of F and L. The beak of the figure changing click C then rests against one side of the extremity of the long limb, the movement of which is limited by two studs S_1 S_2. This arrangement enables the typewheel to be moved $4\frac{1}{2}$ degrees when a change from figures to letters or vice versa is desired. The action is as follows: The figure and letter changing

plates F and L are situated so that F in its raised position obstructs the gap into which the impression cam enters when the fourth electro-magnet alone is energized, whilst L does so when the cam enters as a result of the fifth electro-magnet operating. Assume that figures are being printed, the position of F and L will be as shown in Fig. 330. L is partly obstructing a gap while F is clear. If it is desired to print a letter, the fifth electro-magnet operates, the cam entering the slot forces L back turning L_1 to the left, elevating F and forcing the long limb under the click so that it rests against S_2. As the figure changing lever SP is clamped to TW the latter partakes in the movement and letters will be printed, while F remains in position ready for the next change from letters to figures. The inking wheel fitted with a felt ring saturated with ink is situated to the left of TW. It is carried on an arm, adjustable by means of a stop plate, so that the felt just makes rubbing contact with the periphery of the typewheel.

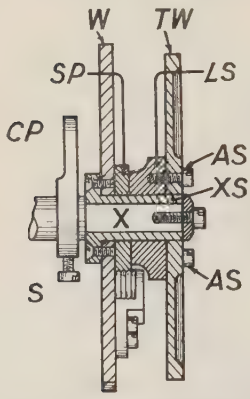

Fig. 331. Typewheel and Impression Wheel Sectional View

Speed Control of Receiver. The motor drive is communicated to the receiver by means of a hide band running in the groove of a wooden pulley fitted on the typewheel axle behind the rear plate. The pulley ratio is actually 1 to $2\frac{1}{2}$. It is necessary that the receiver should run in phase with the distributor, but the degree of accuracy required is not so great as between the two distributors on a circuit. In practice the receiver is set to run about 1 per cent faster than the distributor, and braking devices are used to prevent it overrunning the distributor.

The load on the motor varies, from a minimum when the receiver is running idle to a maximum when printing is taking place every revolution. To enable the distributor to control the receiver speed an electromagnetic brake is fitted in the base of the latter, operated by a current from the local ring of the distributor,

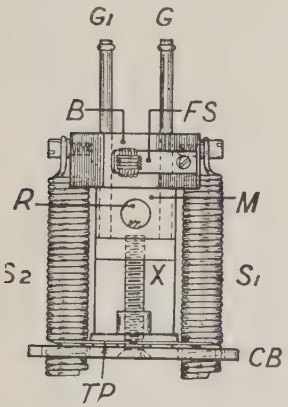

FIG. 332. RECEIVER GOVERNOR

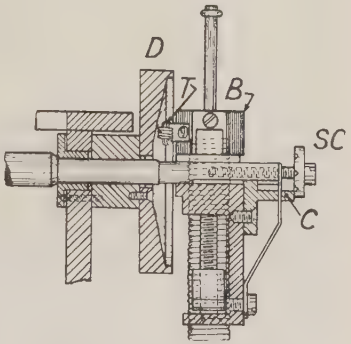

FIG. 332a. RECEIVER GOVERNOR

while to compensate for variation of the load a form of governor, known as the moderator, is employed.

The Governor. The governor spindle carries a worm geared to the printing axle by an intermediate wheel, The governor speed is about 1800 r.p.m. It is constructed as follows: A metal carrier *M* (Figs 332, 332*a*) is bored to fit on to the spindle and engage it by means of a projection *R* on *M* entering a groove cut lengthwise in the axle. A screw *SC*, serrated on the underside to engage a catch *C*, fastens the governor to the spindle. Two guide rods GG_1, upon which a brass block *B* can ride freely, are carried by *M*. *B* carries a small screw each side for the attachment of spiral springs S_1, S_2. One end of the spiral springs threads through a crossbar *CB*. A screw *X* fixes the adjusting plate *TP*. A flat

spring FS attached to B is wound with thread at its free end to form a pad T. The governor as a whole revolves close to a shallow saucer-shaped friction disc D. When the motor is started and the governor spindle acquires speed, B moves outwards on G, G_1 in proportion as centrifugal force overcomes the tension of S_1, S_2. Owing to the shape of D, at a certain point as B flies outwards, the pad T on FS makes rubbing contact with D and as the surface of D slopes, the braking effect increases as the radius of the circle described by the pad lengthens. The extent of the outward movement of B is determined by the point at which a balance exists between the centrifugal force and the inward pull of the spiral springs. If the spring tension is too tight, braking is insufficient and the receiver runs fast; conversely if the springs are slack, slow speed results. The tension of the springs is regulated by altering the number of spirals in play (48 is the full number). Only the spirals between the eyelet and the tension plate are effective. The position of the governor in relation to D is regulated by means of the screw SC. When the receiver is running idle the load on the motor includes the friction of the brake pad against the disc. When printing commences, an additional load is thrown on the motor, tending to reduce speed and to allow the spiral springs to draw in the weight thus reducing the arc described by the pad. In effect friction *inside* the receiver and friction *outside* the receiver are balanced so that the introduction of the former is immediately compensated by the withdrawal of the latter, thus making the load on the motor practically constant. What has been said about the governor of the receiver must not be applied to the distributor governor dealt with elsewhere.

Adjustment of Receiver Speed. The screw SC should be adjusted so that the pad makes contact with D rather more than two-thirds from the centre. A piece of paper should be inserted carefully between the make and break contact inside

the receiver. The brake electro-magnet is then disconnected. By placing a finger under the lower spring each revolution of the eccentric cam can be felt and the number of revolutions per minute can be " clocked." If the speed is above 182 r.p.m., release one spiral spring and, with the fingers, screw it through the crossbar half a turn, thus lengthening the amount of spring in action, replace the eyelet and " clock " speed again. If still too fast the next half turn should be made on the other spring. It is well to form the habit of making this adjustment with the governor in the position shown in Fig. 332, i.e. with the guide rods uppermost. The spring last altered can then be identified should further alteration be necessary. It is essential that the number of spirals in action should be, as near as possible, the same on each spring and, since counting is difficult, the blade of a knife is found useful for this purpose. The blade is slipped along the spring one spiral at a time. When 182 r.p.m. has been fixed remove the paper from contact and adjust the armature of the electro-magnet and cork so that a definite pulse action is seen on the governor each time the armature is attracted. A speed fault may show itself by a total failure of printing or by a jumble of letters known as " a bad passage." To ascertain if the speed is correct request the distant station to send letter T's. If the receiver is too fast they are received as TTTTTTUA TTTTTTUA. If speed is slow TTTTTTS TTTTTTS appears on the slip. It must be understood that the number of T's received correctly will vary with the measure of speed fault existing. In an extreme case twenty or thirty may be printed before the run out occurs. If the commencement of a message fails to print, the receiver is fast. If a speed fault occurs in the middle of a message the speed is probably on the slow side. If the speed appears to be good when no printing is taking place, but runs out when printing commences it indicates a faulty adjustment of the brake pad.

Brake Circuit. Referring to the electro-magnetic brake circuit, the arrangements are shown in Fig. 333. A pair of electro-magnets *EM*, the coil of each wound to 25^{ω} (with a shunt of 500^{ω} in the latest receivers), are supported on a bracket *B* and screwed to an ebonite connection block *E* where the electrical connections are made (for the sake of simplicity only one electro magnet is shown). Between the electro-magnets a brass fly-wheel *FW* carried on the governor spindle revolves. The armature *A*, of *EM*, is carried by a lever *L* hinged

at H under the base plate. The lever carries an adjusting screw AS acting upon a flat spring FS, and is bored to receive a cork C. When C is in position it makes

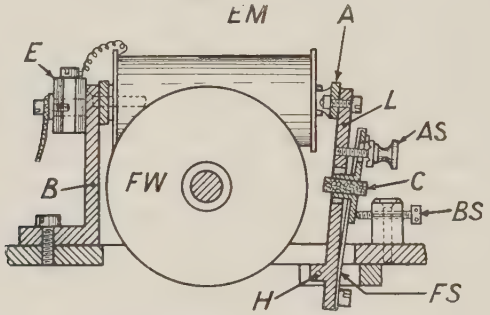

Fig. 333. Brake Electro-magnet

contact with the periphery of FW each time the armature is attracted. Its position relative to FW is adjustable by means of AS. The screw BS regulates the distance between A and the pole-pieces. The brake circuit also includes two flat springs S_1, S_2 (Fig. 333a) which make and break in response to the action of a contact lever CL. These parts are carried by an ebonite piece E. The circuit is from local ring of distributor, to receiver base, EM, S_1 and when contact is made S_2, to earth. An eccentric cam EC is carried by the main axle X, causing the beak of CL to be raised at each revolution and S_1 to make contact with S_2. Whatever may be the relative positions of the receiver and distributor when the motor is started, the former soon arrives at a position where the electric brake comes

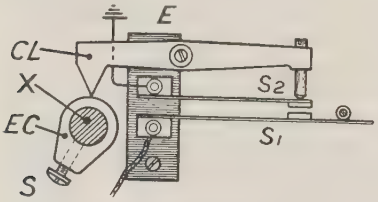

Fig. 333a. Make and Break of Brake Circuit

into action, preventing any further overtaking. It is at this position that the received currents are allowed to pass from the distributor into the five electro-magnets

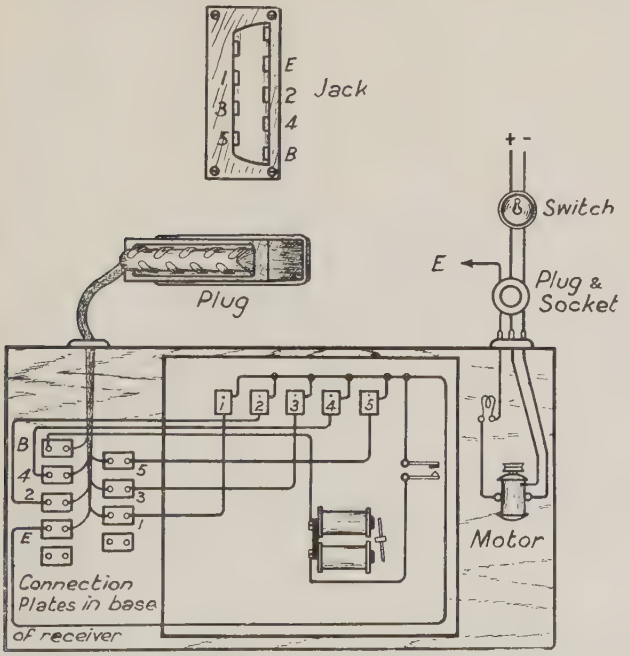

Fig. 334. Receiver, Electrical Circuits

of the receiver. There is then no fouling of the shuttle-cam by the selector levers.

The electrical circuits of the receiver are shown in Fig. 334, and its cycle of electrical and mechanical operations is illustrated on a time basis in Fig. 335. Careful study of this figure is recommended so that the functioning of the receiver may be fully appreciated.

Receiver Adjustments.

(*a*) It is arranged that the brake action takes place when there is no other mechanical operation in process. The following

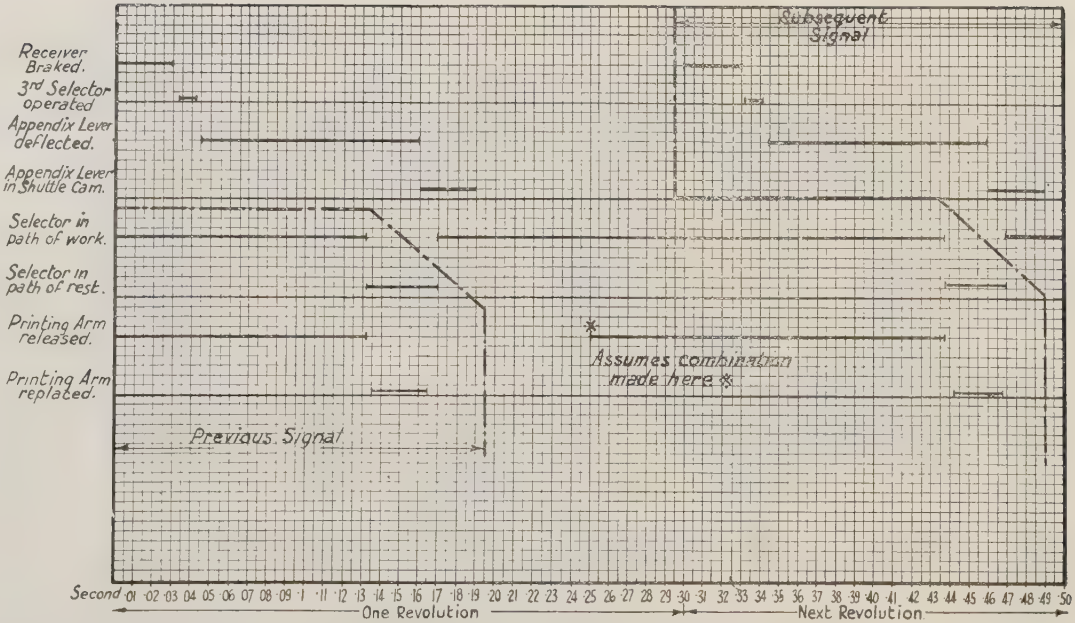

FIG. 335. RECEIVER, OPERATION, ON A TIME BASIS

relationship should exist: When the beak of the contact lever CL (Fig. 333a) is at the corner approaching the apex of the eccentric cam EC the shuttle between K and K_1 (Fig. 320) should be at the lowest point of its rotation. The screw S allows the eccentric cam to be shifted to obtain the correct position.

(*b*) The replacing lever should accompany the impression cam until it is engaged by the catch of the locking lever. The position of the replacing lever can be adjusted slightly by means of a screw at the side of the plate on which the lever is pivoted.

(*c*) The appendix should not rest upon the horizontal arm of the selector lever. When operated it should give a smart tap to the lever and accompany it until engaged below the notch of the upright spring.

(*d*) The free end of the releasing lever should not rest upon the horizontal arm of the locking lever, but should have a clearance of 1–2 mils (the thickness of a cigarette paper).

(*e*) If the relationship between the typewheel and the combiner wheel is not correct the impression cam will foul the teeth of the impression wheel instead of entering the gaps. The result is an " unlocked " wheel due to the clutch spring disengaging itself from the clutch. To verify the position, stop the receiver motor, operate the first electro-magnet by hand and slowly revolve the driving wheel. In due course the lever P (Fig. 325) rises preliminary to striking. At the point where the gap between P and LL is widest the middle of the first tooth after the blank portion of the impression wheel should be in line with the point of the impression cam in its stationary position.

Printing Faults.

1. Sides of letters faint or missing. If the trouble is on the same side of letters consistently the typewheel is a trifle out of adjustment in relation to the impression wheel.

2. Letters printed with gaps in them. Printing roller has worn unevenly and requires repacking.

3. A smudge between words or after the inversion has operated. Printing roller a shade too large or tension on paper feed insufficient.

4. Printing spaced irregularly. Faulty tension on paper feed or spring on click not acting.

5. Letters superposed. One of click springs faulty.

6. Wrong letters printed. Wheel unlocked or throw up of " U " spring weak.

7. Wheel unlocking. Impression wheel slightly out of position.

8. Occasional smudge instead of letter. Replacing lever not taking cam on printing arm completely home.

9. When faulty printing of one side as in 1 affects letters only, or secondary characters only, the trouble is usually due to the screws limiting the play of the inversion lever being worn away slightly.

The Grunenwald System. The French have developed a Baudot unit in which the receiver and keyboard are combined and the brake current and cadence signal dispensed with. An axle is mounted at right angles to the front of the distributor (see Figs. 341, 341*a*) by means of an arm attached to the right-hand side. The axle is rotated by one of the brush arms ; it carries a set of commutators, one for each of the receivers on the particular installation. Each unit employed has a definite phase relationship to the distributor, such as exists between the keyboard and distributor on a normal set due to the cadence signal. The commutators are adjustable on the axle, they can be placed in any desired relationship to each other by means of pins and perforations resembling the fitting on a distributor axle for changing the position of the brush-holders.

The motor is of a simple type. It is fixed on the typewheel axle of the receiver in a non-magnetic case behind the back plate. The stator coil is connected to the relative commutator. The connections to the bi-polar rotor are joined to two collecting rings mounted on the receiver axle, from the carbon brushes associated with these rings connections are also taken to the commutator. Alternating currents are thus sent to the motor and the receiver rotates in unison with the distributor. A small handle is attached to the typewheel and after a few turns the instrument picks up the speed of the distributor. The apparatus for the brake circuit and moderator is not required and the vacant space in the receiver base is used to accommodate the keyboard. It fits into the base similarly to a drawer in the Wheatstone receiver, being secured by a button and bolt. The five keys project immediately above the table level. The keys are automatically locked and released by the rotary movement of the receiver so that a cadence signal is dispensed with. A switch at the side of the base controls the motor and also provides for transmission or reception as required under simplex conditions.

The principal advantages claimed for the system are as follows—

(*a*) It dispenses with a separate drive, either weight or motor.

(*b*) The apparatus is self-regulating, it requires no brake or

moderator ; if the receiver rotates it must be in unison with the distributor.

(*c*) Local batteries for the cadence and brake circuits are avoided.

(*d*) Two rings of the distributor are thrown idle and can be utilized for other purposes.

(*e*) The cadence signal, a source of annoyance to certain individuals, is absent and the machinery, generally, is quieter than other installations.

THE DISTRIBUTOR

The distributor is the most important link in the Baudot system. It provides the means of distributing voltages to the local apparatus, of distributing the incoming and collecting the outgoing line signals, and keeping the local apparatus in phase.

Its essential features are the driving mechanism, one or two plates consisting of six metallic contact rings, either continuous or segmented, traversed by rotating metal brushes and, in the case of one station, apparatus for correction of phase displacement.

The earlier Baudot sets installed have distributors driven by gravity. Several heavy weights are suspended from the main axle by chainwork. Originally, a foot treadle was employed to raise the weights, but at present a motor wind is used. The motor is controlled by a make and break contact circuit operated by the falling weights. With this type of distributor a centrifugal governor is employed as shown in Fig. 336, and is the sole means of maintaining the uniformity of speed essential for successful working.

Vastly better results are obtained by the use of a vibrating reed and phonic wheel. The combination of a reed, phonic wheel, and epicyclic gear or " mechanical correction " devised by Donald Murray is a definite advance on earlier methods, and is in extensive use. A considerable number of Mendonça Governors have, however, been introduced on British multiplex sets recently.

The Phonic Wheel *PW* (Fig. 337) is carried by the main axle *X* of the distributor. The body of *PW* is made of cast iron with a steel cover each side. The interior is filled with crumpled iron wire pushed on

Fig. 336. Distributor, Weight Driven

to steady pins. A hole is drilled in one of the nine cavities between the teeth and about $1\frac{1}{4}$ lb. of mercury is poured into the wheel. The hole is then closed by a screw. As a result of this packing the phonic wheel has a considerable fly-wheel effect and any tendency to

fluctuation of speed is counteracted by the inertia of the mercury.

In the latest pattern of distributor the axle runs on ball bearings.

Two electro-magnets EM^1 EM^2 operate PW. They are each wound to a resistance of 72^{ω}. The polepieces are shaped and the lower one extended so that each can face two teeth or two cavities, but they are arranged

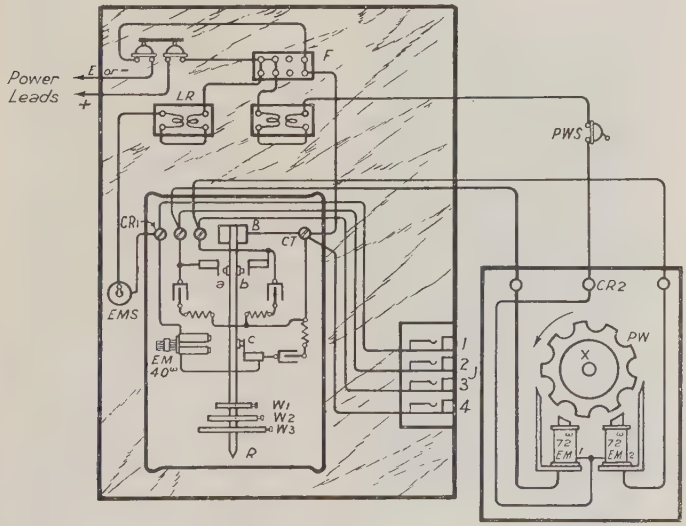

Fig. 337. Phonic Wheel and Electrical Circuits

so that when EM^1 faces teeth EM^2 faces cavities, and vice versa. PW rotates under the influence of pulses of current from the vibrator through EM^1 and EM^2 alternately.

The Vibrator. The multiplex vibrator is shown in Fig. 338. The apparatus is assembled on a wallboard 21 in. × 15 in. It is essential that the board should be fixed to a support that is free from vibration and that the boards should not be near enough together to

influence each other electrically. The steel reed R (Fig. 337), $9\frac{1}{4}$ in. long, is firmly clamped at B. It carries two adjacent platinum contacts a, b, and a third below, c. At its free end three or four metal blocks $W^{1\text{-}3}$ are clamped to R by screws. Vibration is secured by means of two electro-magnets EM wound to 40^{ω}. When the switch EMS is closed a current flows from, say, + through the cut-out F and lamp resistance LR, through EM, contact c, reed, and common terminal CT to return lead. The reed is attracted by EM and makes contact with a, leaving c, but the circuit of EM is now broken and R returns to contacts c and b. Thus, a state of vibration is set up and contacts a and b supply current impulses to EM_1 and EM_2 as the circuit of each in turn is closed. The rate of vibration of R and, consequently, of PW, can be varied by altering the position of the weights $W^{1\text{-}3}$. These act similarly to the bob on a clock pendulum. Lowering a weight towards the free end of R reduces the speed, raising a weight increases the speed. The vibrator in use at a " corrected " station (Fig. 338) has the small weight attached to guide rods. It is movable up or down on R by means of a thumb-screw at the top of the vibrator. In this way a vernier adjustment can

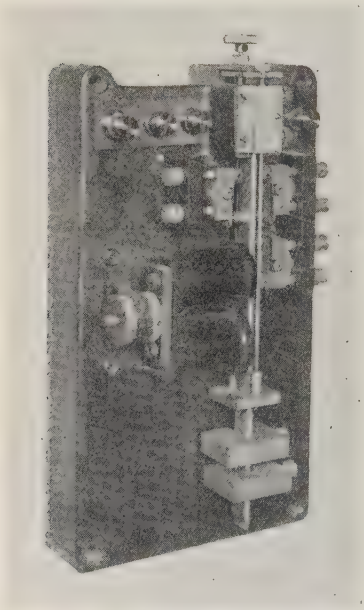

FIG. 338. MULTIPLEX VIBRATOR

be made whilst the reed is vibrating. Without this facility the distributor is stopped each time the speed requires alteration. The position of *EM* in relation to *R* is adjustable by means of a screw. The polepieces of *EM* should be $\frac{3}{16}$ in. from *R*. Lamp resistances are inserted in the power leads suitable to the voltage employed. The switch *PWS* is inserted so that the vibrator can be operated independently of the phonic wheel, for instance, when adjustments are being made.

Each contact is shunted by a $\frac{1}{2}$ microfarad condenser in series with 300^{ω} resistance to suppress sparking at the contacts. This apparatus is placed under the iron base of the vibrator.

Adjustments. A jack *J* is carried on the wallboard so that voltmeter readings across each contact can be taken. A detector is inserted at CR_1 to measure the current in the circuit of *EM*. Contact *C* is adjusted until the current registered, with *R* vibrating is about 100 mA. The voltmeter is connected to *J*1 and 4 and the reading recorded. The detector is then inserted at CR_2 to measure the current in the phonic wheel circuit, whilst *a* and *b* are adjusted until about 100 mA is recorded while *PW* is rotating. In the case of a corrected station about 110 mA is allowed. Voltage readings are taken at *J*2–4, 3–4. The adjustment of *a* and *b* is not satisfactory until both readings are equal and steady.

When the voltage readings are known the dirigeur records them so that the reed can be readily tested. The movable side of the contacts vary in type and require careful adjustment. The contacts should be cleaned twice a week with a smooth burnisher. The vibrator is provided with a cover to exclude dust. Where high voltages are concerned it is advisable to use a capstan spike having an insulated handle when adjusting the contacts. The small weight, adjustable by thumbscrew, should lie quite horizontal and at right angles to the rods. The latter must not foul the reed at any point.

The Baudot Governor in use with weight-driven distributors is a very delicate piece of mechanism attached to the fastest running axle (1800 r.p.m.). It revolves in a guard ring. The governor has a sleeve *SO* (Figs. 339, 339*a*) which fits on to the distributor

axle X and is clamped by the screw at C. The sleeve is extended forward and divided into two prongs P, P_1. A highly polished steel rod R is fixed through each of the prongs. One extremity is capped by a nut N, and the other fitted with locking screws LL by means of which the position of a crossbar CB is fixed. A metal mass M rides freely on the two rods. Two spiral springs SS are hooked on to the crossbar,

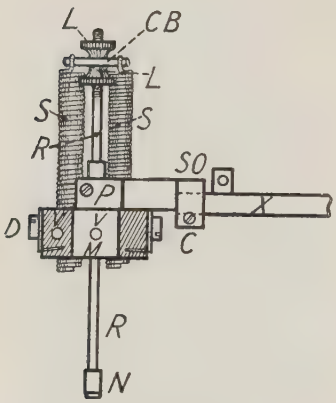

Fig. 339. Baudot Governor

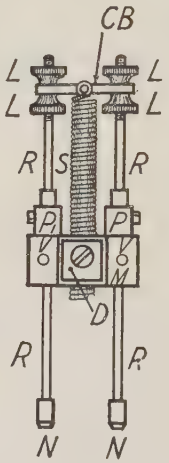

Fig. 339*a*. Baudot Governor

the other ends being threaded into and through the mass M. They are secured by plates and screws shown at D. Holes are drilled at V to accommodate additional screws, the weight of M therefore is variable. When the distributor reaches a certain velocity M moves away from P, P_1 in response to centrifugal force and advances along R until the tension of SS prevents further outward movement. Centrifugal force is thus balanced against the springs, the governor is therefore in a very sensitive condition and responds to a very small variation in either of these forces.

Governor Theory. The function of a governor is to keep the speed of rotation sensibly constant despite the small variations due to friction or other causes, which necessarily occur, either in the driving power or in the resistance offered by the driven mechanism. The ideal governor is one which acts instantly with the smallest possible variation in speed, and adequately increases or reduces the load on the driving power as may be necessary to restore the speed to normal in the shortest possible time. The energy of a rotating mass M at an angular velocity of ω radians per second on a radius r,

$$E = \tfrac{1}{2}Mr^2\omega^2$$

If with ω unchanged, r is reduced to r_1 the energy E_1 available is

$$E_1 = \tfrac{1}{2}M\omega^2 (r^2 - r_1^2)$$

By making M fairly large and ω high (by attaching M to the fastest running axle), variations in the radius of gyration will produce or absorb a considerable amount of energy. By suitable design, the extra power required or to be absorbed will, within fairly wide limits, be produced or dissipated by variations in the radius of gyration.

The centrifugal force exerted by a rotating mass M at an angular velocity of ω radians per second on a radius r,

$$F = M\omega^2 r$$

This force F is balanced by the opposing force T of springs which is in turn proportional to their elongation, and hence to the radius of gyration, hence

$$T = kr$$

where k is a constant depending on the dimensions and material of the springs. For any value of ω, $F = T$, hence $M\omega^2 r = kr$

$$\text{and } \omega = \sqrt{\frac{k}{M}}$$

i.e. the actual value of ω depends solely on the relationship between the mass M and the tension of the springs. With suitable values, the radius of gyration of r will vary so as to keep ω sensibly constant. The equation for ω is of the same form as that of a pendulum, to which in theory every form of governor ultimately reduces.

Governor Adjustment. The governor is adjusted until the speed of the distributor remains constant at all amplitudes of the rotating mass. The following rules govern the procedure of setting up a correct adjustment.

(*a*) If the speed is constant while the amplitude varies, the governor is functioning properly. The test is made by altering

the number of weights on the drive and watching the correction indicator (described later).

(*b*) If the speed varies *directly* as the amplitude the tension of the spiral springs is weak. The crossbar should be raised slightly.

(*c*) If the speed varies *inversely* as the amplitude the tension of the governor springs is too great, lower the crossbar.

(*d*) The tension of the springs should be altered by means of the crossbar not by varying the number of spirals.

(*e*) The lower screw *L* determines the position of the crossbar, the top screw only serves to clamp.

(*f*) Every alteration of spring tension will alter the speed, and the small weights or screws affixed to *M* must be varied to compensate.

(*g*) A slight alteration of speed can be made by adding a small screw to *M* at *V*, or withdrawing one.

(*h*) A drastic alteration of speed is made by altering the number of spirals in action, that is, altering the number of spirals between *CB* and *D*.

The construction of the governor as issued results in a distributor speed of about 180 r.p.m.

Direct Motor-driven Distributors. Attempts have been made in the direction of driving the distributor directly from a motor, the advantage of such an arrangement is that all parts are then in one unit and more directly under control of the dirigeur. In the case of the vibrator and phonic wheel, for instance, the vibrator is frequently several yards from the distributor table, resulting in lost time when a series of adjustments is necessary. As a whole, the experiments have not resulted favourably, but a distributor introduced by M. L. Doignon, of Malakoff, Paris, which employs the Doignon-Mendonça-D'Oliveira governor seems likely to prove more successful. The apparatus, officially designated Baudot distributor No. 4 base, is shown diagrammatically in Fig. 340. The motor *M* is enclosed in a hollow cast-iron base *S*. The base carries a bracket *B* on which the " Mendonça " governor *R* is fixed. At one end of the axle *A* a pinion *PI* gears with the intermediate wheel of the distributor. The axle also carries a free pulley *P* driven by *M*. In one piece with *P* is a cone *C*.

The governor has two weighted arms SA^1 SA^2 restrained inwards by four spiral springs *SS*. The extremity of each arm carries a rubber *RB* making contact with the cone. If the rubbers are raised from the cone, *P* and *C* are rotated by the motor, but the axle which is turned through the medium of the rubbers and the governor remains stationary. By rotating the disc *V* at the left-hand side of Fig. 340 the speed of the distributor may

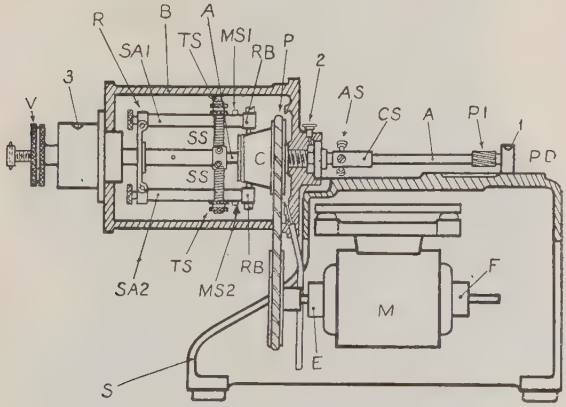

FIG. 340. MENDONÇA GOVERNOR, DIAGRAM

be varied to the extent of 30 r.p.m. The action is to alter the position of the rubbers in relation to the coned pulley.

The resultant force with which the rubbers *RB* grip the cone *C* depends on the difference between the spring tension and the opposing centrifugal force. As the speed of the motor rises from zero, *R* and *A* revolve together until a certain critical speed is reached. Up to this point there is no slip between the driving and the driven mechanisms, and both revolve together. When the speed of the driver increases beyond this value, the centrifugal force reduces the pressure applied by the rubbers and slipping sets in. This slipping increases

with increase in the driving speed and the speed of the driven mechanism remains constant—hence the speed of the motor must be somewhat above that required on the distributor. Transfer of energy from the distributor

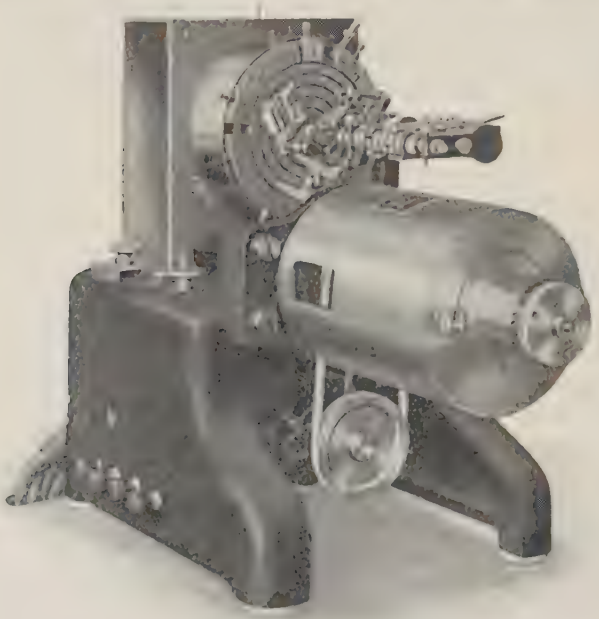

Fig. 341. Distributor with Mendonça Governor

to the motor is impossible, and any tendency in this direction would cause the distributor to stop.

It is claimed that, subject to the limitation that the speed of the motor shall not fall below the critical speed referred to above, there is a wide margin within which the speed of the driven mechanism will remain constant. This device would probably have very wide application

but the amount of power which the clutch will transmit is necessarily very small.

A distributor with the governor mounted in position is shown in Fig. 341. The distributor is a French type with the attachment described under the "Grunenwald" system. Fig. 341*a* shows the governor and base with distributor removed.

Theory of the Mendonça Governor*

Let m be the mass of the ends of the arms carrying the pads RB, Fig. 340
f be the coefficient of friction
Ω be the angular velocity of the coned pulley C
ω be the angular velocity of the governor R
T be the spring tension
C be the resisting couple
F be the tangential resisting force at radius R,

then—

If W_f = the work done in friction, this must equal the work due to the resistance to be overcome, W_r

W_f = the tangential force F acting through a distance ωR in 1 sec.

The total work furnished to the mechanism is

$$W_t = (T - m\omega^2 R)f\Omega R \quad . \quad . \quad . \quad . \quad . \quad . \quad (1)$$

of which the useful portion is

$$W_u = (T - m\omega^2 R)f\omega R \quad . \quad . \quad . \quad . \quad . \quad . \quad (2)$$

and that lost in heat by slip

$$W_r = (T - m\omega^2 R)f(\Omega - \omega)r \quad . \quad . \quad . \quad . \quad . \quad (3)$$

The useful work is also

$$W_u = C\omega = FR\omega$$

$\therefore$ from (2) $W_u = (T - m\omega^2 R)f\omega R = FR\omega$

or $$F = (T - m\omega^2 R)f \quad . \quad . \quad . \quad . \quad . \quad . \quad (4)$$

It can be seen that ω does not depend upon Ω provided that Ω is less than ω. Dependence could only exist if there were no friction, and this is only so when there is no relative motion of the coned pulley and the governor. This independence also only holds if F and f are constant. The effect of variation of the resisting couple is readily seen—

$$\text{from (4)} \quad \omega^2 = \frac{T}{mR} - \frac{F}{fmR}$$

* Taken from the Automatic Telephone Manufacturing Company's brochure *The A.T.M. Doignon Baudot Multiplex.*

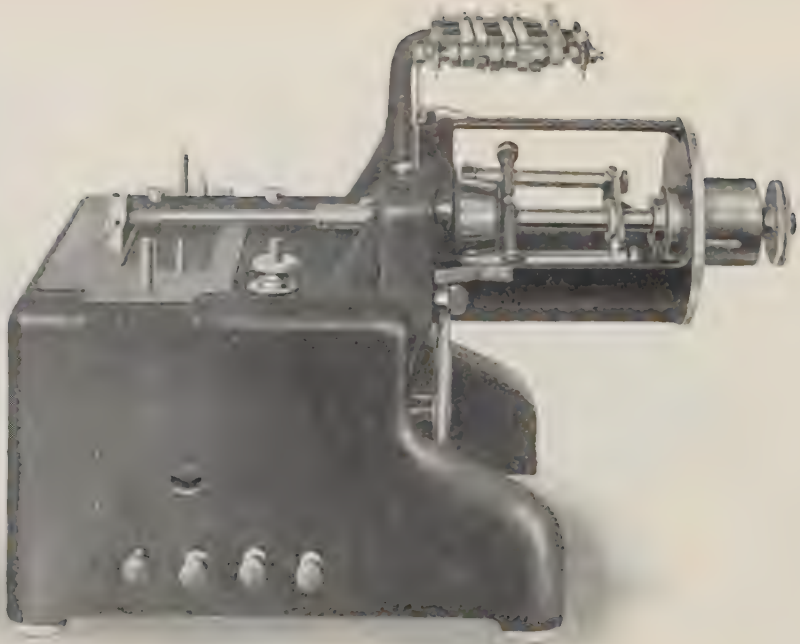

Fig. 341*a*. Mendonça Governor and Base

If F is very small ω^2 tends to $\frac{T}{mR}$. For this to be so $\frac{F}{f}$ must be small and T and f should be large, as ω = approximately $\sqrt{\frac{T}{mR}}$, ω can be altered by operating on R or T.

Up to the critical value $\omega = \sqrt{\frac{T}{mR}}$, the driving and driven speeds are equal, after which slip sets in and infinite variation of Ω has no effect on ω. If the motor speed increases, so does the slip $(\Omega - \omega)$. Any tendency on the part of the governor to increase would increase $m\omega^2R$ and reduce $(T - m\omega^2R)$, thus reducing F. If there is an increase of load on the driven side, the tendency of the governor to lag behind increases the pressure of the pads and reduces the slip. There is no physical movement of the governor arms, and, therefore, no hunting.

Adjustments. Unhook the springs and verify that the arms rise and fall quite freely. The pinion PI must be quite free in its pedestal PD and its adjusting socket AS, without binding in the coupling sleeve CS or governor shaft.

The rubbers must be formed to the angle of C by means of a rasp supplied with the instrument. The length of the rubbers and tension of the springs must be equal. Comparison is made by measuring the distance between MS and B. Support a screwdriver on B, turn R until MS^1 is opposite and just touching the driver, rotate R half a turn and assure that MS^2 also touches the driver. If inequality exists, the longer rubber should be further rasped.

Spring Tension. The four springs must be extended equally, this regulation is effected by means of TS. When altering the springs to secure the speed required, a slight alteration of all four springs must be made at each stage. When the speed is obtained a piece of chalk should be used similarly to the screwdriver while the governor is in action and further adjustments made until each stop is marked equally by the chalk.

Lubrication. The governor has three oil channels, 1, 2, 3. One and two should receive three or four drops of Baudot oil several times a day and 3, twice a week. The motor should be oiled at E and F twice daily. The cone of the pulley should be wiped carefully and given a trace of oil.

Distributor Frame and Plates. The distributors are of a standard pattern as regards frame, plates, and general assembly. The frame is of hard rolled brass

with sliding top and end panels. The plates have a hollow brass body with a vertical ebonite face. The segments and rings bed upon the ebonite and are connected by brass studs and wiring inside the body. The wiring is carried out from the body by a cable clip.

The front and back plates of a quadruple duplex distributor are shown in Figs. 342 and 342*a*. The allocation of the segments in relation to line and local apparatus is shown in Fig. 343. The only alteration made for double, triple, quintuple, or sextuple working is to vary the number of segments and, consequently, their size. The six sets of sending and receiving segments in a sextuple set occupy the same space as the two sets of segments in a double. The principle is the same in all cases and detailed description is, therefore, confined to the arrangement in most general use.

The three outer rings on each plate are segmented ; the three inner rings are continuous. The rings are numbered inwards, the outer ring on each plate being Ring 1. The segments of the outer rings are shortened to half the length of *R*2 and *R*3. The shortened segments are placed in line with the central portion of segments in the adjacent rings. By this means the " distorted " portion of the received current is eliminated. The shortened segment is connected while the relay tongue makes steady contact, possible overlapping of signals due to slight phase difference is also avoided.

To avoid damage to the rotating brush and possible bad contact due to bouncing, the spaces between the shortened segments are filled in by a guard plate. In the latest distributors, *R*1 of the front plate is rotatable as a whole, independently of other rings. The back plate is used for connections relating to the sent signals : the front plate has to do with reception only. This corresponds to the Post Office telegraph relays where the back terminals are " line " and the front terminals " local." The rotating brush arms connect the rings in pairs, *R*1 to *R*4, *R*2 to *R*5, *R*3 to *R*6. It should be

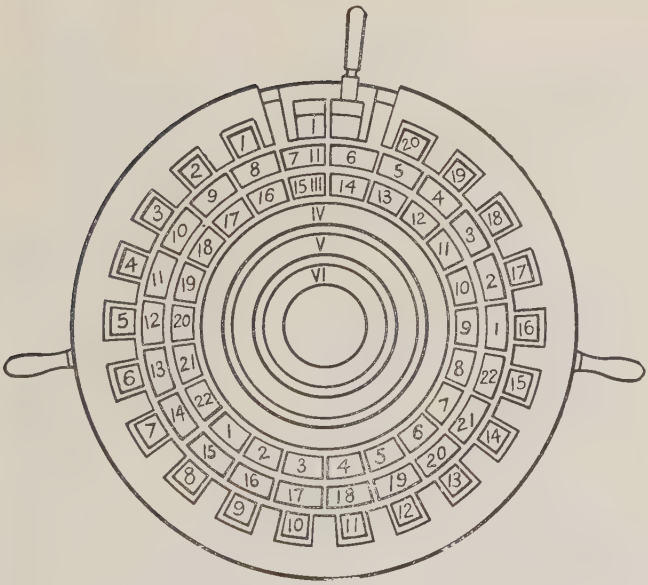

FIG. 342. BAUDOT QUADRUPLE, FRONT PLATE

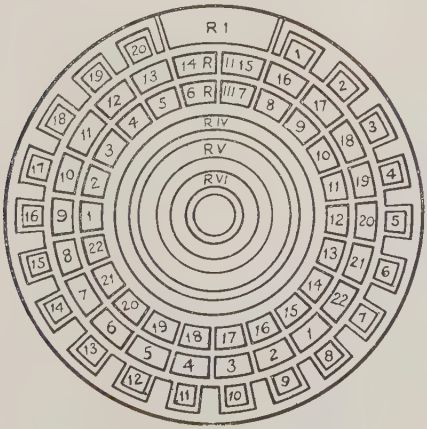

FIG. 342*a*. BAUDOT QUADRUPLE, BACK PLATE

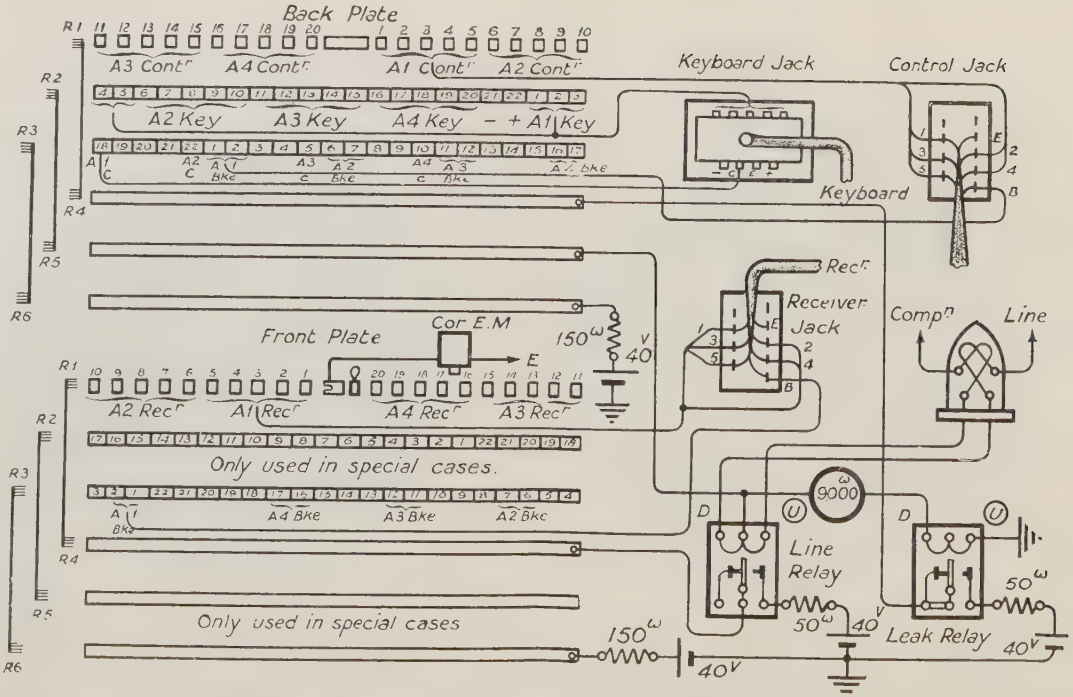

FIG. 343. DISTRIBUTOR PLATES, APPARATUS CONNECTIONS

noticed that the rotation of the front plate brushes and numbering of the segments is in an anti-clockwise direction, and the back plate clockwise. It will be seen (Figs. 342, 342*a*) segments 1, 8, 16 are in line radially on *R*1, 2, and 3 of the front plate, whereas on the back plate the order is 1, 16, 8.

The incoming signals are communicated to *R*4 of the front plate from the tongue of the line relay, and distributed to the four receivers connected to the 20 segments of *R*1. The receiver brake currents are sent out via *R*3 from the 40^{v} battery connected to *R*6. *R*2 and 5 front plate are not used normally, but can be utilized for a learner's set or testing purposes.

The outgoing signals from the keyboards pass from segments 1 to 20 of *R*2 back plate to *R*5, and thence to the split of the line relay. At an intermediate point a leak circuit of high resistance is teed off and taken to the coils of the leak relay. Segments 21 and 22 of *R*2 are used for correction purposes. The twenty segments of *R*1 are connected to the local control receiver jacks so that a local record of the outgoing signals can be obtained if required. Normally, the only control receiver employed is on the first arm where messages of special importance are dealt with. The cadence and control receiver brake currents are supplied from *R*3 and 6. At a " corrected " station a special movable segment forms part of *R*1 front plate. It is connected to an electro-magnet inside the distributor and operates the epicyclic gear to be described later. At a " correcting " station this segment is not connected, and the gearing of the distributor is very simple.

Rotating Brush Arms. Three brush carriers are attached to three arms spaced 120° apart. Each carrier has two parallel shallow channels to carry a brush. The channels are spaced to bridge four rings. The brushes trail upon the two extreme rings of the four. A brush carrier and one arm is shown in Fig. 344. *AA* are channels carrying silver alloy brushes *SS*, each backed

by a steel stiffener. The channels are bridged above by a bar B carrying the clamping screw C. The spindle D carries a counterweight G between the channels. The brush carrier arm E has an ivoride bush inside the socket receiving D. F is a clamping screw. Thus, each carrier and pair of brushes is in good electrical contact, but is insulated from other arms. The mass of each brush carrier is equalized by the counterweight. This is necessary since the arm reaching out to cover $R1$ has necessarily more metal than the arm for $R3$. By spacing the arms 120° apart, and equalizing their mass, a balanced rotation is secured. Two arms are a fixture on the hub, but the position of the other, serving $R1$ and 4, is adjustable by means of a screw CS. The arm can be displaced slightly to either side of its normal position. The brush arms engage with a collar on the distributor axle by a pawl P, which can be slipped over a washer on the extremity of the axle. The pawl is held in position by a spiral spring, but can be raised by means of a thumbscrew TS.

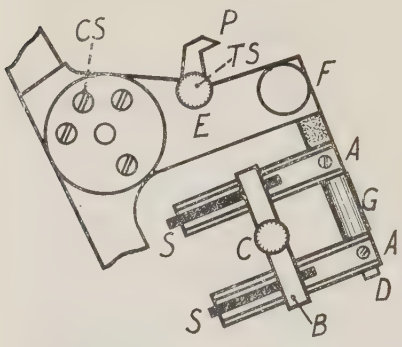

Fig. 344. Brush Arm and Carrier

A hard steel cylindrical nosepiece, with twelve holes bored in the face of its flange W (Fig. 345) is pinned on the tapered end of the distributor axle A. The snail cam C, placed over the plain portion of the nosepiece, has a pin on its inner face engaging one of the twelve holes. The screw ring SR clamps the combination. The snail C engages the pawl of the brush arms which rotate by this means, but the pawl is easily thrown out

and the brush arms ride free if any obstruction is encountered. The object in using a snail instead of a simple slotted collar is to prevent the back-kick of the phonic wheel from buckling the brushes when the vibrator is stopped. The position of the brushes can be varied (*a*) to make heavy or light pressure on the plate by means of the clamping screw *F*, (*b*) the position of one of the three pairs of brushes can be altered to more or less than 120° from the next pair, (*c*) by shifting the cam *C* one or more holes of *W* any desired relationship between the brushes on the two plates can be arranged. The position is normal when the brushes of rings 1, 2, and 3 are coincident upon segment 1.

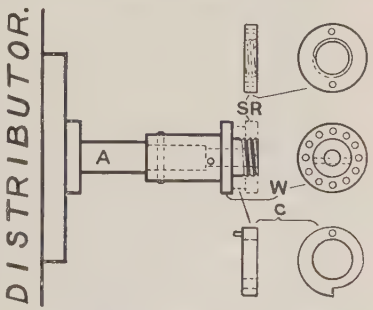

Fig. 345. Distributor Axle and Collar

Brushes. The brushes are a weak point in the multiplex system, and many attempts have been made to obtain a metal brush fulfilling all the requirements. It is necessary to secure good electrical contact between brush and segment when the former is rotating at high speed and yet to avoid putting excessive pressure on the brush. Heavy brush pressure tends to cause difficulty in starting the distributor, to wear grooves in the edge of the segments, and to produce ripples on the surface. Formerly, copper wire brushes were in use in the British Post Office, but the standard brush now in use is composed of silver solder strips measuring 1·5 in. × 0·12 in. × 0·0065 in. A piece of steel spring is used as a stiffener and is clamped upon the brush in the brush carrier.

A braided brush is used in America. It is made up

of thin, soft-drawn copper wires braided into a round, then rolled out flat to a width of $\frac{7}{64}$ in., cut to a length of $1\frac{1}{2}$ in. Probably the best results are given by a brush manufactured for the French Administration. The brushes are made up with great care and precision: 26 strands of wire, 0·19 millimetres diameter (approximately 8 mils) are arranged on glass above a marked board. The composition of the wire is 82 per cent copper, 10 per cent tin, and 8 per cent cadmium. The wire strands are soldered at the ends, on both sides, and washed in benzine. With this type of brush the resistance at the point of contact with the plate is negligible. The individual strands tend to clothe any inequalities or worn portions in the plate and a pin-point contact, often made by a solid brush, is impossible.

Line Retardation. If an earthed battery is applied to a long telegraph circuit, an appreciable interval of time elapses before the current actuates the distant relay or galvanometer. Oscillograph records show that the current increases until it reaches the steady value expressed by Ohm's Law. When the battery circuit is broken there is likewise an interval before the current ceases. The delay in the appearance of the current at adequate strength to operate the apparatus at the receiving end is termed the " propagation time." It is directly proportional to the KR of the circuit (capacity $\times$ resistance). In the case of a multiplex circuit this time interval can be expressed in segments, for example, if a current sent from segment 1 is wholly received on segment 2 at the distant station the circuit is said to have a retardation of one segment. At 180 r.p.m. with a 22-segment plate this represents $\frac{1}{66}$ sec. Hence, on such a circuit the received signal will always lag one segment behind the sent signal. If a circuit is worked simplex segmental provision must be made to allow for the retardation, since each arm requires to send and receive, but for duplex working this is not necessary. For a quadruple simplex distributor

twenty-four segments are required instead of the twenty-two for duplex working.

Unison. Fig. 346 shows the method of securing phase relationship at the corrected station, that is to say, assuring that signals sent from segment 1 at Birmingham are received on segment 1 at London. The London brushes are set *R*1 front and *R*2 back, both on segment 1. The movable segment *MS* is fixed in a certain position determined as follows: When the

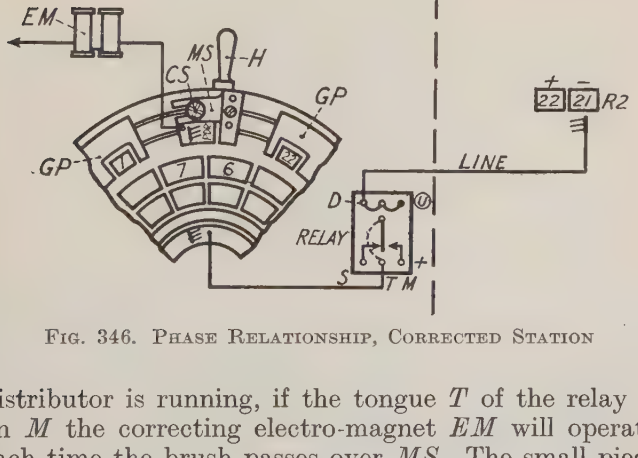

Fig. 346. Phase Relationship, Corrected Station

distributor is running, if the tongue *T* of the relay is on *M* the correcting electro-magnet *EM* will operate each time the brush passes over *MS*. The small piece on the right of *MS* is insulated, its object is to assure a steady contact on the larger portion. If the large piece of *MS* is covered by a piece of stiff paper while the brushes are rotating, *EM* is disconnected. The paper is gradually drawn to the left until a point is reached where *EM* is seen to operate feebly and shortly afterwards to act firmly at each revolution of the brushes. This point, known as the *PDR* (*point de repère*), is carefully noted and *MS* is moved by means of the clamping screw *CS* and handle *H*, until the *PDR* is immediately

in line with the gap between segments 6 and 7 of $R2$ as shown. In this position, the space between the end of the guard plate GP on the right and PDR is equal to a segment, and from PDR to the beginning of GP on the left also equals a segment. Birmingham sends a marking current from segment 21 $R2$, bringing T of the relay to M. If now the distributors are in unison, EM at London will not be operated because the $R1$ brush is passing the gap to the right of the PDR. If, however, the London brush has passed the PDR before the relay has been restored to S by the spacing current

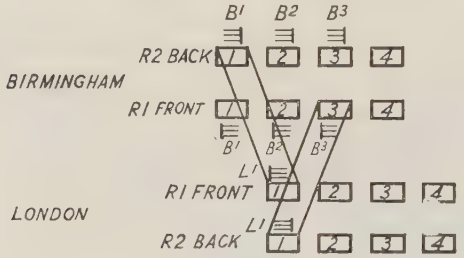

Fig. 347. Line Retardation

from Birmingham segment 22, EM is operated, the star wheel functions, and a slowing down of the brushes takes place. Then, since segment 22 London is brought into phase with segment 22 Birmingham, the other segments will also correspond. The slight gain of the corrected stations distributor can be ignored. It will be noticed that line retardation does not enter into the question. Whatever the line lag may be, the correcting mechanism automatically sets up the proper relationship between the stations. Now consider the case from the Birmingham end. If the brushes are placed $R1$ front and $R2$ back, both on segment 1 as shown, B_1B_1 (Fig. 347), assuming that the line lag between Birmingham and London is one segment, it is clear that when the current operates the London relay the

Birmingham brushes will be at B_2B_2 and a signal sent from London segment 1 will be received at Birmingham when the brushes are at B_3B_3. The difference between the sending and receiving positions at Birmingham is, therefore, equal to twice the time lag of the line. The amount of this difference in position is determined when a new installation is set up. The brushes at the correcting station are then adjusted so that the receiving brush is trailing behind the sending brush by the segment value of twice the line retardation. This position is shown (Fig. 348) where B_1 brushes

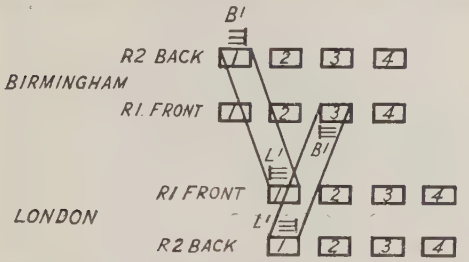

Fig. 348. Line Retardation. Correct Brush Positions

at Birmingham are placed on segment 1 of $R2$ and segment 3 of $R1$. The amount of retardation varies slightly from day to day as the result of differences in brush and relay setting. This variation is compensated by " orientating " the front plate at the correcting station each morning. When the two distributors are started the correcting current operates the relay at the corrected station once per revolution. As the distributors are not in unison, the marking current may operate a selector electro-magnet of any one of the receivers and remain through to that selector for, say, eighteen revolutions. The corrected station, however, is running at a gaining rate, and the current passes on to the adjacent segment for eighteen revolutions, and so on until at length the signal is received on the movable segment. At this point the correcting mechanism operates and the

two distributors are held in unison. When the corrected station is satisfied that the speed conditions are good he depresses the third key on the first arm. The correcting station is in attendance and proceeds to orientate. The frame of the distributor has a scale above the front plate marked in degrees. The correcting station rotates the front plate in each direction until the arriving signal begins to fail on the receiver, noting the position on the scale at each extreme. The range for good reception is thus determined, and if the plate occupies a middle position a margin for working exists. The plate is finally clamped in position by a handle operating a clamping screw. If a change of relays or alteration of brushes is made during the day it is advisable for the correcting station to take a fresh orientation.

The Epicyclic Gear at Corrected Station. A vertical section of the distributor is shown in Fig. 349. It is the type used with a centrifugal or a Mendonça governor. The epicyclic gear and star wheel is shown in perspective in Fig. 350. The system of wheels is opened out in Fig. 350*a* so that the inter-action of the pinions may be seen clearly. In this figure the distributor is of the type used with a phonic wheel drive. A phonic wheel motor *PW* (Fig. 350*a*) is rigid with a smaller toothed wheel *A*, the two revolve together, free, on a sleeve fitting over the brush holder axle *XL*. The correcting mechanism frame *MD* screwed to *XL* carries a satellite train. An axle carried by *MD* has a small pinion *P* on its inner end, engaging with *A*. The other extremity of the axle carries a larger pinion *LP* which in turn engages a third pinion *SP* carrying a star wheel *SW* on its axle. If *SW* is rotated by hand in an anticlockwise direction *P* and *LP* will be rotated in the opposite direction by *SP* and will travel round the periphery of *A*. A bridge piece *B* is carried by *MD* and to it is screwed a steel blade spring *S* terminating in a small steel roller *R*. The roller rests between two of the teeth of *SW* and sufficient pressure is given by

S to prevent the star wheel turning. The satellite train is, therefore, locked with PW and A. Thus the whole combination revolves at the speed of the phonic

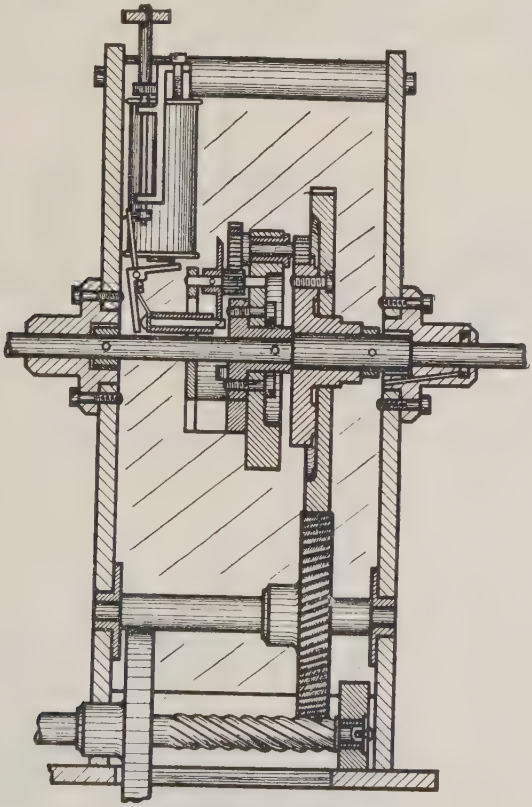

Fig. 349. Distributor, Vertical Section

wheel motor. If, however, a tooth of SW meets an obstruction and is arrested at a point in its travel the roller R is forced to rise and allow SW to turn until the obstruction is cleared. The result is a slight shift between the satellite train and PW. The brush holders

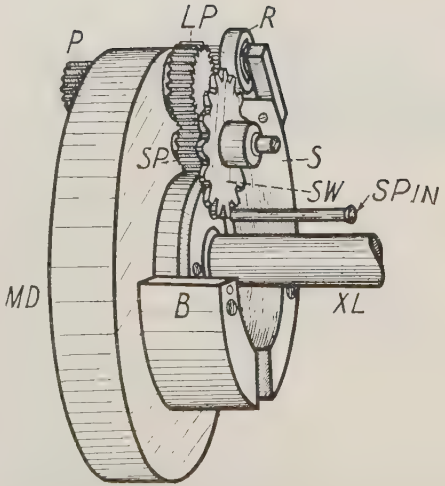

Fig. 350. Epicyclic Gear

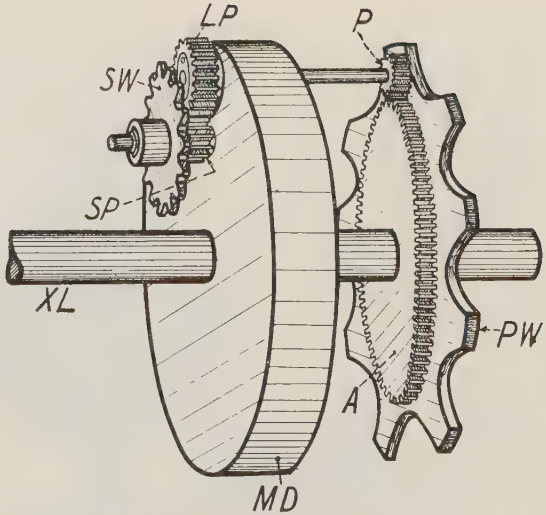

PW - Phonic Wheel 9 Teeth.
A - Gear Wheel 96 Teeth.
P - Small Intermediate Pinion 12 Teeth.
LP - Large " " 24 Teeth.
SP - Star Wheel Pinion 12 Teeth.
SW - " " 15 Teeth.

Fig. 350*a*. Epicyclic Gear (Principle)

are retarded slightly in relation to PW as often as SW turns one tooth.

Correcting Electro-magnet. The star wheel is operated by means of an electro-magnet EM (Fig. 351) placed inside the front plate of the distributor. EM has two coils each wound to 25^{ω} shunted with 100^{ω}. One side of EM is connected to the large portion of

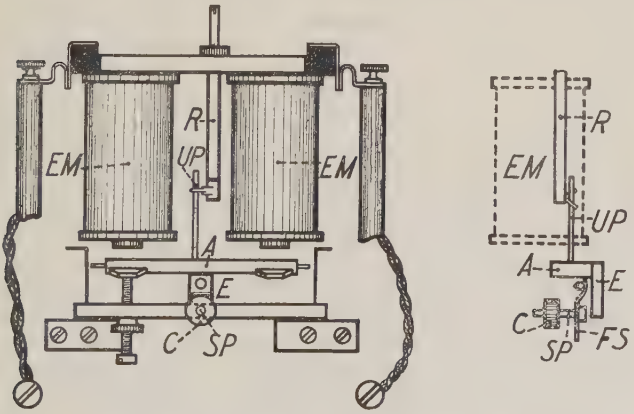

Fig. 351. Correction Electro-magnet

the $R1$ movable segment, front plate, and the other side is earthed at the connection box.

The armature A is adjustable in relationship to the polepieces and carries an extension E, at right angles to itself, below. To the front of the extension is a small forked spring FS. A steel pin SP is placed at right angles to the extension E with its head held in position between the fork of the spring and E. The other end of the pin protrudes through a circular channel C. A steel pin UP is carried on the upper side of the armature for turning, by means of a fork, an indicator rod R, slotted at its upper end, which extends through the distributor frame. The indicator makes half a turn each time A is attracted. A flag is fixed in

the slot so that the operation of *EM* can be readily observed by the Dirigeur.

If *R*1 brush is in such a position that a current passes through *EM* the pin *SP* is projected by *E* into the path of the star wheel. The obstruction offered and the force of the rotating system is sufficient to overcome the pressure of the spring *S* (Fig. 350), causing *SW* to turn one tooth under the roller. The brushes are retarded $\frac{1}{240}$ of a revolution $= 1\frac{1}{2}°$. After the star wheel has passed a cam on *MD* replaces the pin *SP*.

Adjustment. The correct operation of the star wheel is of the utmost importance and its behaviour should be watched with the top and end plates of the distributor removed. Operate *EM* by hand so that *SP* is pushed out. Rotate the phonic wheel slowly and verify that the pin does not foul the point of a tooth of *SW*, it should engage the side of a tooth. The spring of *R* is slotted to permit slight movement forward or backward, this rotates the star wheel so that the proper position can be taken up. The star wheel should operate when *R*1 brush is passing over segment 7 and the correcting pin should be replaced when the brush has just left segment 14.

If alteration is necessary to secure these conditions it is made by shifting the collar on *both* ends of the axle. Residual magnetism in *EM*, stiffness in any part, bad regulation of the jockey roller and its spring and other faults of a like nature cause speed variations that are extremely difficult to locate. If the following test is carefully carried out each morning before working commences the operation of the correcting mechanism can be verified.

Stop the distributor with brush arms in position and mark, with a pencil, the spot on the phonic wheel immediately over the star wheel or roller whichever is situated most conveniently. Start the distributor carefully to avoid disturbance of the epicyclic gear. With all line and battery terminals raised *EM* should not operate. Screw down the terminal for voltage serving the local of line relay, or local relay if a " G " relay is in use. As the relay usually has a slight marking bias *EM* now operates each revolution. Count forty beats of the indicator then cut off power again. Stop the distributor and if the correcting mechanism is in order the pencil mark will now be $1\frac{1}{2}$ segments of *PW* to the left of the star wheel or roller. The basis of this test is as follows: *PW* has nine teeth,

hence one segment = 40°. One tooth of $SW = 1\frac{1}{2}°$ step back. Therefore, 40 actuations = 60° = $1\frac{1}{2}$ segments of PW.

Duplex Working. As the line speed of a Baudot circuit is comparatively low, no advantage would be gained by working even moderately long lines on the bridge principle, hence differential duplex is invariably adopted. The arrangement (Fig. 352) presents no remarkable features. The sending currents pass from the keyboards to rings 2 and 5 of the back plate, thence to the split of the line relay. At an intermediate point a leak circuit is teed off and taken through the leak relay, to serve the local receivers by means of rings 4 and 1 back plate. The incoming signals received on the line relay tongue, if in a marking direction, are distributed to the receivers via rings 4 and 1 front plate. A two-way switch allows a 300ω resistance to be substituted for the sending circuit for balancing purposes. A second switch substitutes a *SC* Morse key for the Baudot keyboard. The front and back stops are connected to the poles of the line battery to enable the offices to co-operate when balancing or when any stoppage occurs and it becomes necessary to localize the fault. A leak circuit including a Wheatstone receiver is provided, and by means of a third switch, the outgoing or incoming signals can be observed. It is useful as a means of checking the duplex balance. The clipping of signals due to out of balance is evident on a Morse slip whereas on the Baudot receiver the formation of the signal cannot be determined. A sounder is inserted in a separate leak circuit. Terminals are provided on the distributor table, in order that the Wheatstone receiver may be connected if required for checking purposes.

The wiring shown is for a loop circuit as by far the larger number of circuits are routed in underground cables.

The lines, voltages, and earth leads are taken to thumb screw terminals on the rear of the distributor

table so that any necessary local test can be made. The relays in use for Baudot circuits have a rectangular base. As the coils are not required to be in parallel, the *U* (D) ends are taken to one terminal instead of being divided, thus only six terminals are required on standard " B " relays and nine terminals on the standard " G " relays. The terminals are extended to the outside edges of the base and fitted with contact plates. The relays are placed in the working position by being pushed between clip springs fitted to pillar terminals on the distributor table. This method allows a relay to be changed very quickly, the wiring required is reduced to a minimum, and the relay can be cleaned and adjusted more efficiently when it is free.

Baudot Circuits and " G " Relay. The standard " G " relay is very usefully employed on Baudot circuits, and its introduction has enabled offices 300 miles apart to work without a repeater. As the speed of a Baudot circuit is constant, the values for the vibrating circuit, once fixed, do not require alteration. The additional apparatus required has been reduced to two resistance coils and two condenser sections. The arrangement of the circuit is shown (Fig. 353). As a vibrating relay requires a voltage on both spacing and marking terminals, the tongue cannot, therefore, be taken to *R*4 direct. The selector electro-magnets are non-polarized and would respond to either direction of current. A standard " B " relay is inserted between the " G " relay tongue and *R*4. It is known as the local relay. The 4000$^{\omega}$ resistance coil reduces the current in the local relay circuit to a proper working value (*vide* page 248).

Baudot Circuits with a Repeater. A Baudot circuit is relayed on a standard repeater board, no special apparatus being required. The stations on a Baudot circuit are wired " Universal," that is to say, the distinction between " up " and " down " office wiring is not made and both offices mark with a negative current.

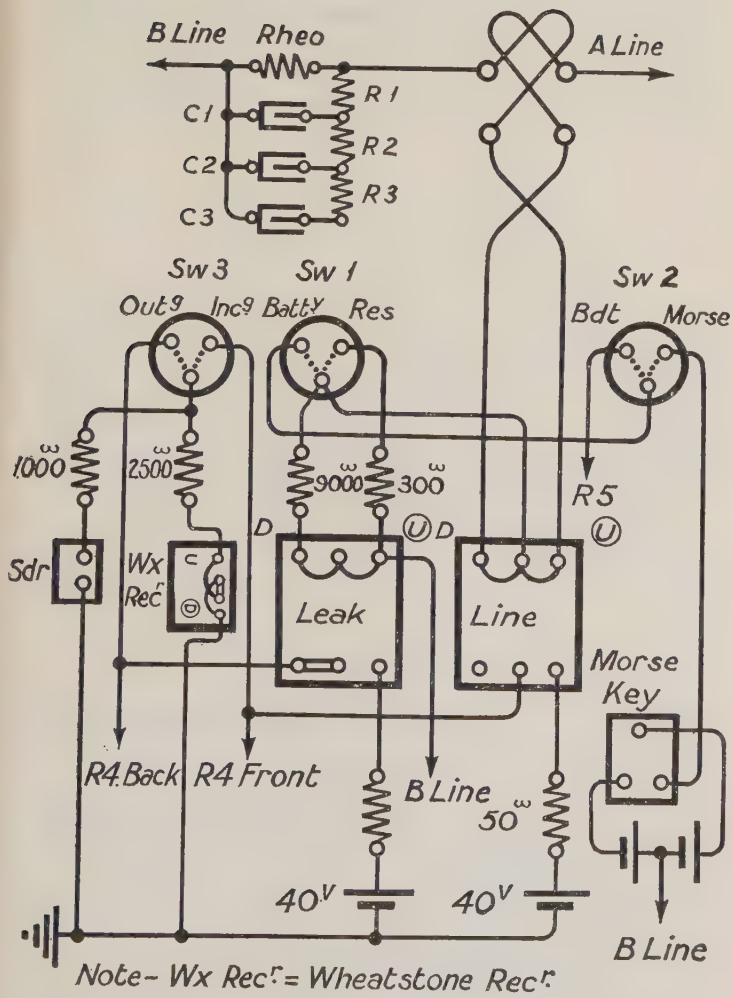

Fig. 352. Distributor Table Apparatus

The connections on the repeater board are re-arranged to meet this condition. It is essential that the repeater and terminal stations should be able to see the formation of the signals from line, and for this purpose the Baudot keys are depressed in certain combinations

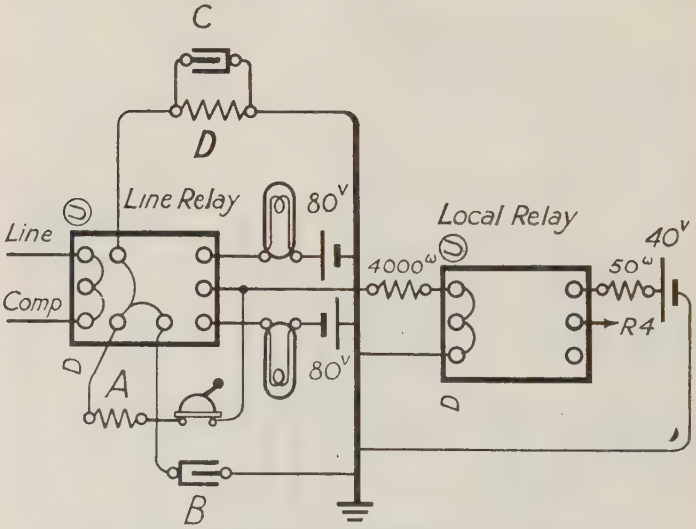

Fig. 353. Standard "G" Relay, Connections

which result in the equivalent of Morse signals being sent to line.

The following combinations are in general use—

		First arm	Second arm	Third arm	Fourth arm	Fifth arm
Baudot double.	Letter combination	Q	E			
	Morse signal	▬ ▬	▬ ▬			
Baudot triple.	Letter combination	T	H			
	Morse signal	▬ ▬ ▬	▬ ▬			
Baudot quadruple.	Letter combination	Q	F	U		
	Morse signal	▬ ▬	▬ ▬	▬ ▬		
Baudot quintuple.	Letter combination	V	E	V	E	
	Morse signal	▬ ▬	▬ ▬	▬ ▬	▬ ▬	

It will be observed there is an initial and terminal dot in each case and any tendency to shorten the first

or lengthen the last dot is detected. Even where a repeater is not in circuit the use of the above method for localizing distortion is valuable when difficulty in reception is experienced. When the terminal offices have balanced to the repeater station, alternate Baudot keys are depressed giving the equivalent of reversals to line, on a quadruple set. The terminal offices verify the balance to the reversals by the Morse key to ensure that the repeater conditions are good. When satisfied, the " combinations " are given, and if these also are good the stations proceed as with a straight set.

If the attention of the repeater station is required during the day, the switch is turned from Baudot to Morse and the S.C. key depressed for 20 sec. The marking current operates the alarm at the repeater station.

Divided Baudot Circuits. By the use of suitable apparatus at intermediate stations, intercommunication between three or more offices on one circuit can be provided. Assume that offices *A* and *B* are linked by lines to an intermediate office *C* and that quadruple duplex sets are in use.

Then *A* and *B* can work to each other on two arms = 4 channels
A and *C* „ „ „ „ = 4 channels
B and *C* „ „ „ „ = 4 channels.

At the intermediate office facilities are frequently provided to enable the through arms to be terminated at will or to join terminated arms through. One of the advantages of the system is economy of lines. In France considerable use of the divided circuit system is made, a number of offices being linked in this way. In Great Britain, until recently, three-station circuits have been the rule. Since the introduction of retransmitters at the intermediate office excellent results have been obtained.

An interesting example of the possibilities of divided working and the use of retransmitters is shown in Fig. 354. *DN* and *MR* have quadruple duplex sets

with *LV* as intermediate office. *DN* works the *A* arm through to *MR*. The *B* and *C* arms are worked to *LV* by *DN* and *MR*, but facilities are provided for joining

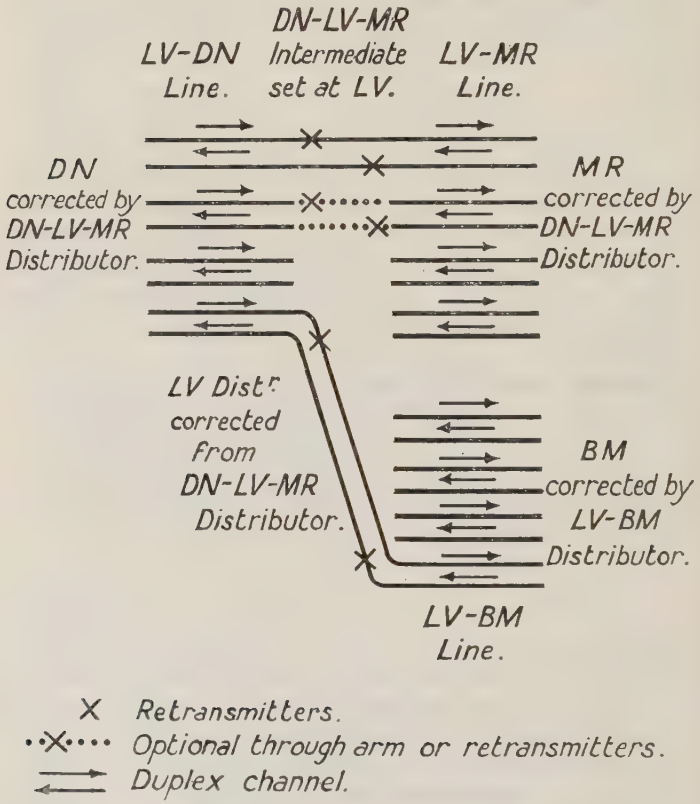

Fig. 354. Baudot, Divided Circuits

the *B* arm through a retransmitter at *LV* if traffic between *DN* and *MR* requires extra channels. The *D* arm *DN* to *LV* is put through to *BM* on the *LV-BM* quadruple set, so that in effect three offices are concentrated by means of the distributor at *LV*. *LV*

corrects *DN*, *MR*, and the *LV-BM* distributors. *BM* is corrected by the *LV-BM* distributor.

Retransmitter. The use of this instrument at an intermediate office, for through channels, enables the received signals which are attenuated in the case of circuits of any length, to be regenerated. They are retransmitted with the contact-time value of a full segment. Retransmitters are equivalent to a Baudot keyboard operated mechanically by the armatures of five selector electro-magnets *EM* (Fig. 355) in

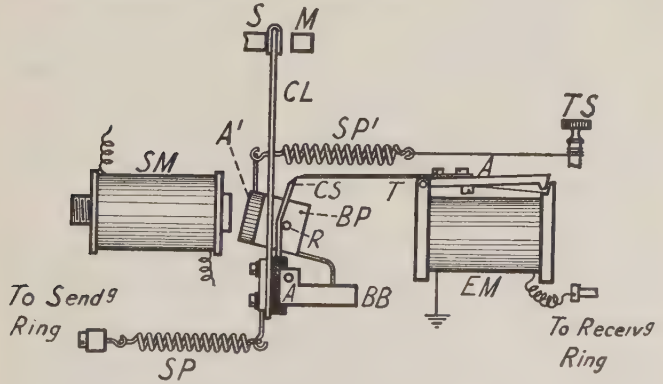

Fig. 355. Multiplex Retransmitter

the circuit of the received signals. To each of five contact levers *CL*, and insulated therefrom, is fitted a curved steel lever *CS*, the extreme point of which engages with a trigger *T* mounted as an extension of the electro-magnet armature *A*. The adjustment of the extension, and curved lever holds the lever *CL* on the spacing contact *S* against the tension of a spring *SP* attached to the lower end of *CL*. When *EM* is operated by a received signal, *T* is raised, thus releasing *CS* and allowing *SP* to pull *CL* over to the marking contact *M*. After the signal combination has been sent to line, a current is passed through the resetting electro-magnet *SM* causing the armature A^1, acting on *CS*, to replace

the contact lever on the spacing contact. The armature extension, momentarily raised during the operation, drops, and prevents the return of the lever to the marking contact until the next signal is received. *BB* is a brass bed plate. *CL* and its parts are attached to a collar fitted over the axle *A* shown at the base of the figure. The armature A^1 is screwed at each end to a shaped brass piece *BP* and the combination is also carried by the axle. A steel rod *R* running through the brass pieces supports the five contact levers. A spiral spring SP^1 hooks on to a pin carried by the armature. It is adjustable by a thumbscrew *TS* and serves to restore the armature to its rest position after the resetting magnet has been operated.

The trigger action involves a very small movement, and, when suitably made, the adjustment remains stable for a considerable period.

Retransmitter Adjustments. The overlap of the bevelled edge of the curved lever and armature extension should be slight in order to facilitate the replacement and retention of the levers against the spacing contact.

A red metallic dust is created by the action of the levers which should not be allowed to accumulate.

If a contact lever takes on a bend it must be carefully reset. Trouble arises if the armature extension is altered to meet the case. A disconnection in the outgoing circuit may be due to the spiral spring *SP* which is in the battery circuit.

Retransmitters are fitted with two cords terminated by plugs, the right-hand plug is for a jack of the type used for keyboards. The left-hand plug corresponds to the receiver fitting. The electrical connections of a retransmitter in position are shown in Fig. 356. The armature of the resetting magnet has more work to do than the cadence magnet in the manual keyboard. Hence it is necessary to allot a segment for the retransmitter considerably in advance of that for the keyboard. The segments of *R*3 allotted to the retransmitter resetting magnets are as follows: arm 1 segment 8, arm 2 segment 13, arm 3 segment 18, arm 4 segment 22.

The jack on the receiving side is wired to accommodate either a receiver or a retransmitter. It will be observed that the special cadence lead is joined through to the retransmitter, while *B*, *E* are left disconnected. These leads are for the normal brake circuit which is joined

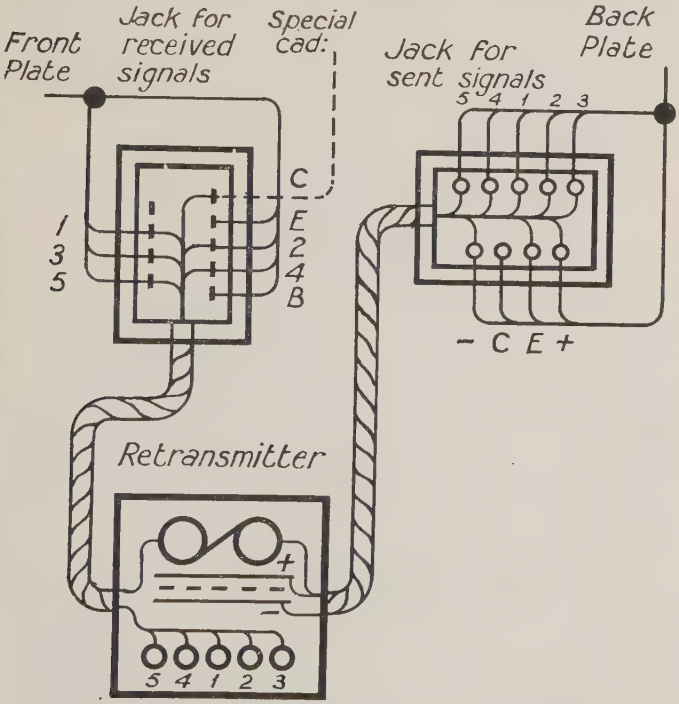

Fig. 356. Retransmitter Connections

through when a receiver plug is inserted. The *C* lead is then disconnected. By means of the jacks a through circuit can be terminated for testing purposes. The signal for the resetting electro-magnet finds earth through the jack on the sending side.

Intermediate Distributor Table. The arrangement of the apparatus is, as far as possible, similar to a terminal

set, but each piece is duplicated. The lines on either side are independent of each other as regards switches, relays, galvanometers, lamps, etc., so that a dirigeur familiar with a terminal Baudot table is not at a serious disadvantage if required to take duty on an intermediate set. The two plates of the distributor are allocated, one to each line, sending and receiving segments being on adjacent rings. This arrangement does not admit the use of a receiver for local record purposes. Each plate is similarly wired.

$R1$	is joined	to	receivers and retransmitters
$R2$	„	„	keyboards „ „
$R3$	„	„	cadence and receiver brakes
$R4$	„	„	line relay tongue
$R5$	„	„	line relay coils
$R6$	„	„	a local battery.

Fig. 357 shows in skeleton form the arrangements at an intermediate office having two terminated arms in each line and two arms working through retransmitters. The only difference in apparatus on the distributor table is that a fixed $10{,}000\omega$ resistance block replaces the leak resistance of several 3000ω flat, circular coils in series used on a terminal set. The intermediate distributor has no epicyclic gear as it " corrects " the two terminal offices.

The mechanical operation of the retransmitter occupies an appreciable time interval, and it is important that the sending brush on one plate should not reach the sending segments of a particular arm until the signals from the corresponding receiving segments have been completely transferred. The required time is obtained by placing the brush on $R2$ front plate half a revolution out of phase with $R2$ of the back plate. This relationship is secured by means of the collar on the distributor axle. When the brush of $R2$ front plate is on segment 1 the brush of $R2$ back plate should be on segment 12. The incoming signals from line 1, $R1$, front plate, operate the retransmitter, but the outgoing signals to line 2 from $R2$ back plate

are not collected until half a revolution later. To some extent, therefore, the signals are stored by the retransmitter. Immediately after the line brush has collected the signals a current from $R3$ resets the

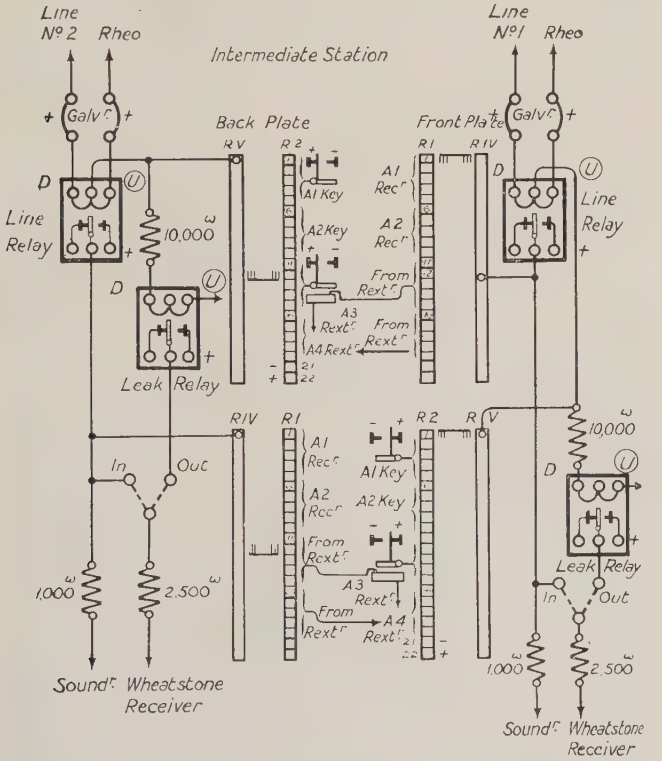

Fig. 357. Divided Circuit. Intermediate Office

retransmitter. The line propagation is accommodated at the intermediate station if under two segments, and for this purpose $R1$ is rotatable as a whole, the extent of the movement, however, is the equivalent of two segments only. If the propagation is more than two

segments the terminal station takes up two segments of the total amount. In the normal case the terminal stations set their brushes exactly as at a corrected station. When the intermediate station has orientated to each terminal station in turn, through communication should be possible without further alteration.

Baudot Simplex. It has already been stated that simplex working is not used in the British Inland service. The line conditions are usually stable underground loop circuits, and the duplex balance, once fixed, requires little alteration from day to day. Where aerial lines are employed, however, and the insulation is variable, simplex working has some advantage, and is in use between London and a number of continental centres. A quadruple simplex set is used, providing four channels over one wire, 2 in each direction or, alternatively, 3 in one direction and 1 in the other. The distributor, as a rule, has only the front plate fitted. Ring 1 has 20 segments, and the special segment for correction; rings 2 and 3 have 24 segments each, segments 21 and 22 of ring 2 being required to allow for the line propagation. The four quadrants of $R1$ can be moved independently so that any position relative to the sending ring can be taken up. The necessity for this arrangement is dealt with more fully in the paragraph on line retardation. Each arm is provided with a two position switch as shown in Fig. 358. In the "send" position the spacing battery is joined through to the back contact bar of the key. In the "receive" position the line relay is joined to the back contact bar. The path of the incoming current is, line terminal, Galvanometer, 2 way switch, leak terminal, connection box, $R5$, $R2$, spacing bar of key, line relay to earth. A leak relay is not required. During the portion of a revolution allotted to a sending arm the current in the leak path operates the line relay and the signals are passed to the receiver to serve as a local record. A non-polarized relay is provided for Morse signals to

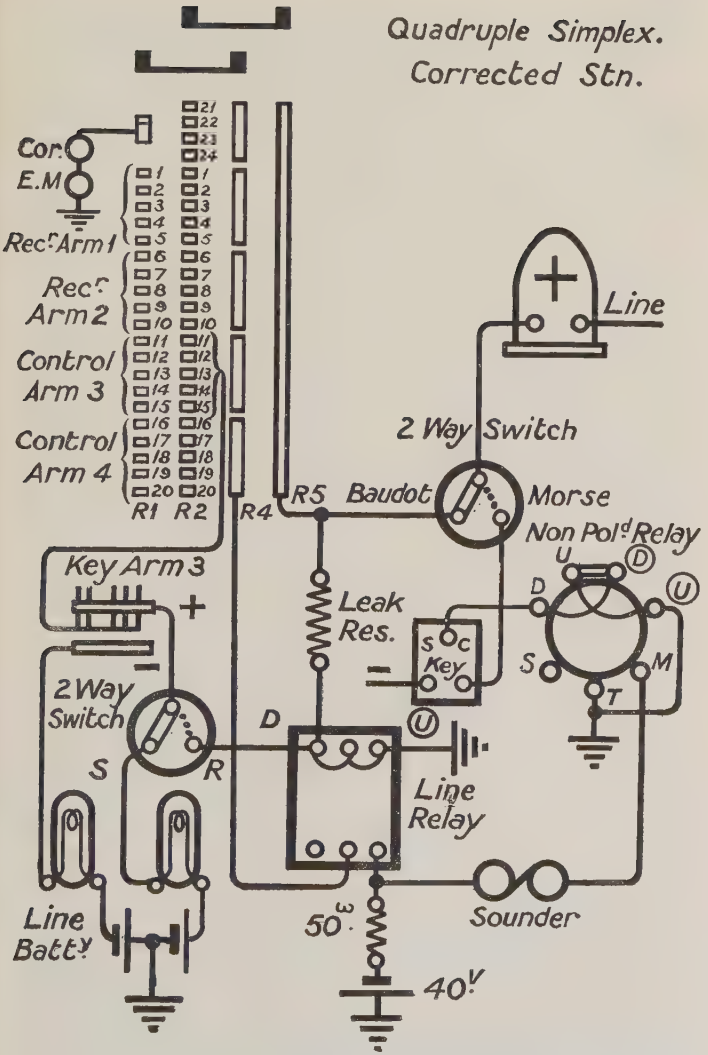

FIG. 358. QUADRUPLE SIMPLEX ARRANGEMENTS

meet the conditions prevailing at continental stations. The path of the current, under the various conditions, can readily be traced. At the corrected station segments 20–24 *R*2 are joined permanently to the spacing battery. Cadence and brake currents are sent from *R*3 as for a duplex set. For the sake of clarity rings 3 and 6 are omitted from Fig 358.

Two-line Simplex Working. Where communications to isolated centres exist, beyond the reach of underground cables, it is at times difficult to maintain a duplex balance owing to climatic conditions such as heavy storms, snow, sea mists, etc. Simplex working as described cannot be resorted to because the distributors have only 22 segments. The difficulty is met by using a second line wire. Additional apparatus consisting of a single coil galvanometer, a two-way switch, and an additional lead from the test case to the distributor table is required. The arrangement is shown in Fig. 359. The outgoing signals from *R*5 instead of passing to the line relay, are diverted through a galvanometer to the second line. The incoming signals from the normal line pass through both relay coils in series, through the compensation circuit, with rheostat at zero, to earth. The incoming and outgoing signals are by this means entirely separated, and it is possible to work so long as the state of the lines allows sufficient working current. As the line current traverses both coils of the line relay in series, the current value required is less than in normal working. Where a repeater is in circuit it is possible to work normal duplex on one side of the repeater and resort to the two line method on the other side.

The Connection Case. The leads from the distributor plates are carried by cable to the base of a connection case situated on the distributor table. They are then distributed to the five bars shown in Fig. 360. Each bar carries twenty-six pins terminated at each end by a screw. The distributor leads are connected to the rear

terminal screw and leads to the apparatus are taken from the front of the box to tag strips fixed beneath the instrument table. Fig. 360 requires no further

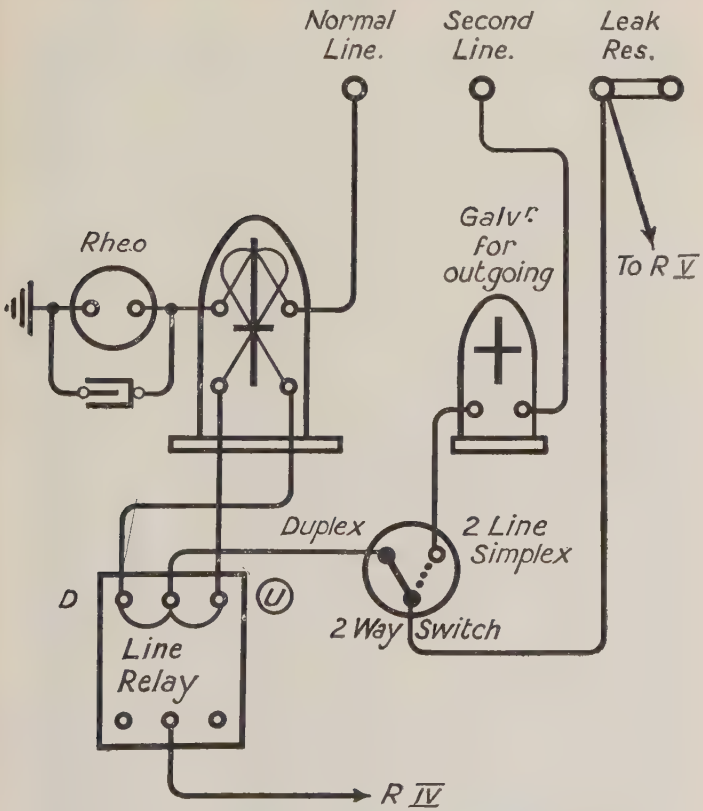

Fig. 359. Two-line Simplex Connections

explanation as the allocation of the leads on each side of the case is shown.

By means of the connection case, once a fault has been localized to the instrument side at the test box, it can readily be determined whether it exists in the

distributor or the apparatus. Contact faults are very liable to occur in the front plate if care is not exercised when the plate is being orientated.

Morning Procedure to ensure Good Working Conditions.

1. Clean and adjust the relays. The cleaning should be done with a burnisher, and it must be remembered that the face of the relay contact cannot be improved by a dirty, coarse burnisher. The burnisher should be kept clean and highly polished. If there is evidence that a pit has formed in the contact a piece of the finest emery paper may be used (Huberts 0000) before the burnishing is done. The relay should be adjusted " neutral." It is advisable to pass a spacing current through the coils before making the adjustment for neutrality, otherwise the effects of polarization may cause a bias under working conditions.

For long circuits, routed underground, the gap between the contact points and tongue of the relay should not exceed 2 mils. The spindle of the relay should be quite free in its bearings. If the extension at the rear of the tongue is lifted by hand the weight of the spindle and its parts should cause a sharp drop when the extension is released.

2. The brushes may require trimming or cleaning if there is any sign of oxidization. So far as is possible, the brush should be made to lie flat on the plate and to drop square from the edge of the segments. If heavy pressure is put upon the brushes it creates difficulty in starting the phonic wheel. Verify the position of the brushes, particularly at a correcting station. Where control receivers are in use the brush of ring 1 of the back plate should be placed about a quarter of a segment behind the ring 2 brush relatively, to allow for the time lag in the leak relay circuit.

3. Verify the position of the *point de repère*. It is preferable to do this by arranging the switches so that a permanent marking current is sent through the relay. If the relay tongue is held over to marking by hand the conditions are not quite the same.

4. If a " G " relay is in use, verify that the auxiliary circuit is functioning properly. Reversals, regular, and at the right speed should be checked by means of the Wheatstone receiver.

5. Verify the voltage readings of the vibrator.

6. Join up the batteries and *B* line. Turn the distributor slowly by hand. With all the keys at rest the galvanometer should show a permanent spacing deflection broken once per revolution by the correction current from segment 21. Disconnect the cadence battery, depress all keys and further

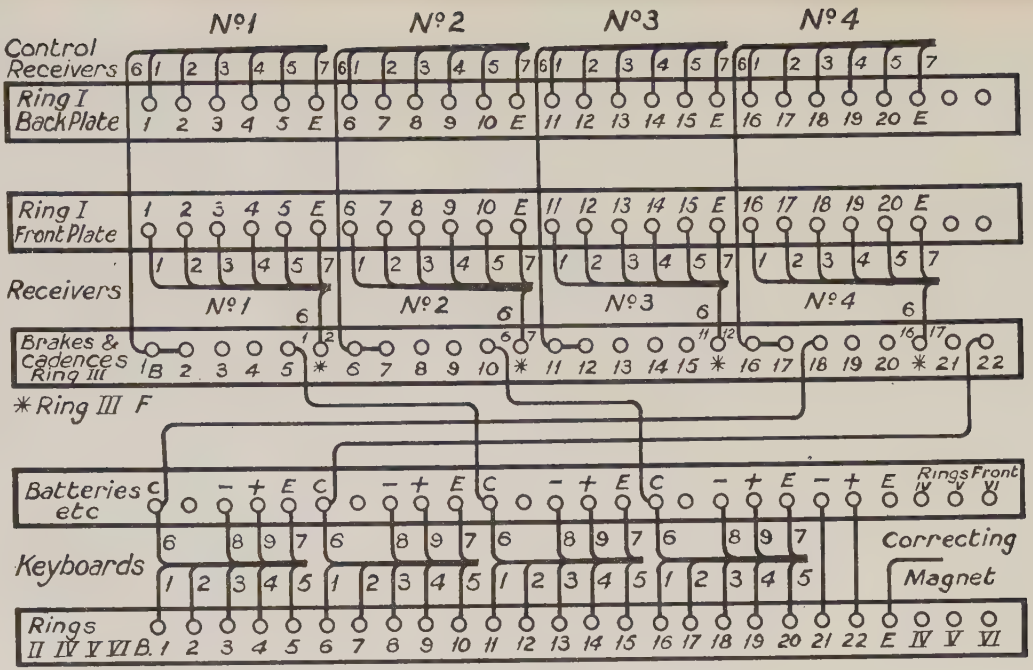

Fig. 360. Connection Case, Quadruple Set

turn the distributor. A permanent marking deflection with one break should now be seen. Restore the cadence battery.

7. Hold tongue of line relay to marking, P's will now be printed on all receivers if local speeds are correct.

8. In the case of a long underground circuit the stations should balance, not only to each other's spacing and marking currents and resistance, but to reversals. It is often possible to detect a variable insulation resistance line fault by this means. The zero of the incoming reversals slowly creeps over if the morse key is depressed against the reversals for a short time. Verify that the deflection from the spacing and marking currents are the same, unequal voltages may be detected. If the ohmic balance to the spacing and marking currents is found to be different the distant stations lamp resistances are probably unequal. If a considerable increase of capacity is required to balance the line it is probable that an earth fault exists in the set. This applies to loop circuits only.

9. When both stations are turning, carefully watch the passage of the correction current on the receivers. Any considerable variation in the number of letters recorded should be investigated. It may arise from vibrator, distributor, or receiver, but trouble in the busy hours will be avoided by dealing with the matter before working commences.

10. In the case of an auto set, prepare a standard tape from the perforator and run it in local. This should be done for each arm separately so that the performance of all the perforators is checked.

11. If, when signals are being exchanged on the individual channels, one arm alone appears faulty, take " a third " on the particular arm and compare with the position found for the first channel. The third channel is often troublesome in this respect. and the fault is frequently due to faulty action of the correcting electro-magnet or jockey roller.

Metal Storage Transmitters.* Great ingenuity has been exercised upon the problem of providing a mechanical method of storing signals without the use of perforated tape the object being to give a free keyboard without the additional expense of paper tape. In general, one device consists of sets of five pins arranged on a drum or disc which rotates as each letter is

* *Printing Telegraph Systems and Mechanisms*, by H. H. Harrison, p. 146–159. " Minniotti Telegraph System," by V. Castelli, *Telegraph and Telephone Journal*, March, 1924.

operated. The transmitting mechanism revolves with the drum, but when sending conditions are established, it moves in the reverse direction and in this way the stored signals represented by the position of the sets of pins accumulate or decrease according as the speed of operation or transmission respectively predominates.

Murray devised an arrangement in which balls were dropped into holes in letter blocks carried on an endless belt.

Yet another method is to provide sets of five condensers which are charged in certain combinations by depressing the letter keys. The transmitting mechanism connects the condensers in turn, allowing the discharge to operate the sending relay.

Automatic Baudot.* The operation of the Baudot keyboard is limited to a practical speed of 35 words per minute or 210 revolutions of the distributor. On the other hand, a typewriter requires but one key to be operated for each character, and the only speed limitation is that imposed by the skill and inclination of the operator. A typewriter keyboard has been substituted directly for the Baudot keyboard, and some little advantage was secured, but even then the need to observe a cadence signal restricted the speed of signalling and tended to produce fatigue. The requisite condition, in order to secure the maximum economy in human effort, and also maximum output, is to provide a free typewriter keyboard and this necessarily involves a method of storing the signals. If this facility is given, the operator may work at any speed as determined by the character of the copy and the psychological conditions of the moment. An experienced typist can type 50 to 60 words a minute without effort and an average of 35 to 40 is attained with ease even when allowance is made for the necessary slowing down due to bad copy.

* *The Baudot Printing Telegraph System,* by A. C. Booth (p. 28–30).

The substitution of a typewriter keyboard for the manual keyboard permits the speed to be raised to as much as 55 words per minute per channel by employing a suitable receiving unit, involving the distributor speed being increased from 180 to 330 r.p.m. With tape-printing receivers a steady output of 35 printed words per minute is a full load for one operator. In addition to gumming the message to a telegraph form time is required to check the accuracy of the printing and to enter the received particulars.

The automatic installations now working employ perforated tape. A typewriter keyboard perforates the

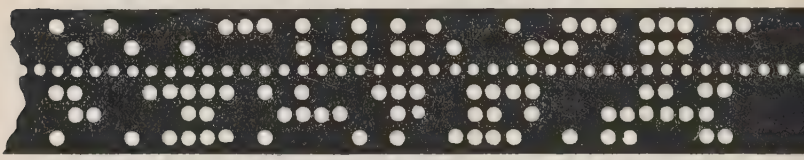

Fig. 361. Keyboard Perforator Tape

five-unit code transversely on the tape (Fig. 361). The tape then passes through a transmitter governed by a cadence current from the distributor. The operator can vary the rate of typing at will but the actual transmission is limited to 210 letters per minute. In one type of transmitter a switch acts if the transmitter catches up with the operator. The moment the tape tightens, the transmitter is automatically switched off, starting again when a further supply has been perforated. The transmitter is close to the perforator on the instrument table and, consequently, the delay between the perforation and transmission of signals is very small.

The apparatus used for a tape printing automatic set working at or above 35 words per minute comprises a Booth-Willmot keyboard perforator, Western Electric transmitter, and Baudot receiver. An installation

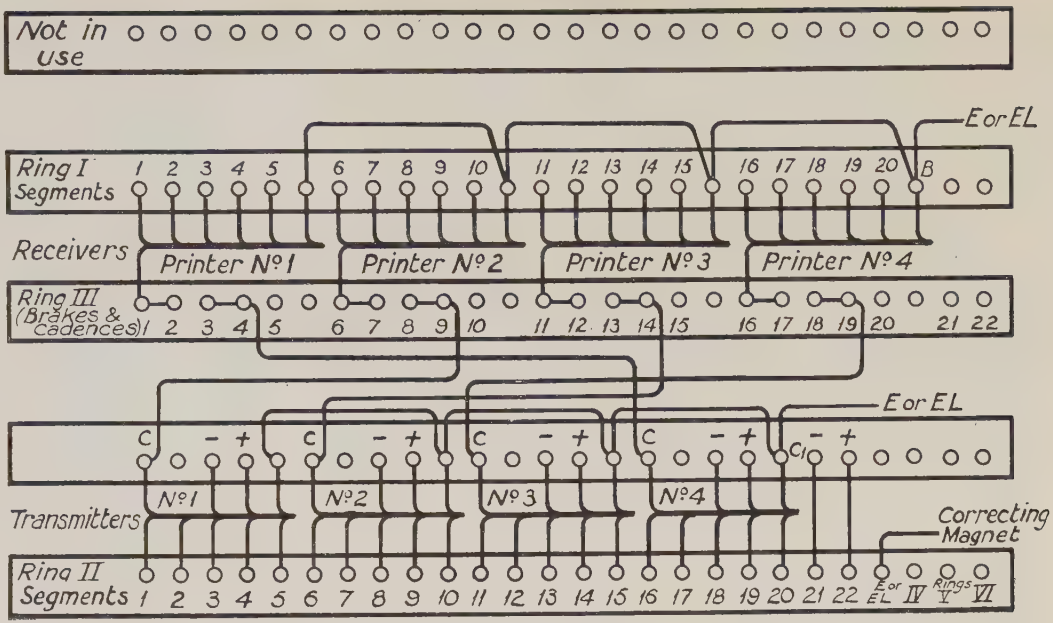

FIG. 362. CONNECTION CASE, AUTOMATIC TRANSMISSION

working at 40 words per minute may have the following combination: Baudot, Murray, or Western Electric keyboard perforator, Western Electric transmitter, and Morkrum page printer, Kleinschmidt, or Creed tape printers.

Distributor Arrangement for Automatic Transmission. The distributor used for auto transmission is provided with a front plate only. The outer ring is capable of a separate movement as a whole to allow for adjusting to meet the propagation time. The power for the local circuits is taken from the 110^{v} electric light mains or, alternatively, 120^{v} secondary cells, in which case each lead contains a 16 c.p. lamp resistance (300^{ω}). The three two-way switches—Baudot-Morse, Battery-resistance, Incoming-outgoing leak—are wired as for a manual set. The resistance coil in the Wheatstone receiver leak circuit is 7000^{ω}, allowing a current of approximately 15 mA.

The connection case wiring differs considerably from that of a manual set. The arrangements are shown in Fig. 362. It will be observed that two segments of ring 3 are used for the cadence signal to each transmitter and that the cadence signal follows immediately after the *R*2 brush has passed the five sending segments, as in the case of a retransmitter.

The wiring for an individual channel is shown (Fig. 363).

Western Electric Transmitter. The metal case of the latest transmitter (Fig. 364) is secured to a wooden base approximately 8 in. by $7\frac{1}{4}$ in. A plug and cord is attached for use with a jack on the instrument table. The cadence electro-magnet is wound to approximately 180^{ω} resistance. It is shunted by a 1 m.f. condenser to prevent sparking at the segments of the distributor. Two switches are carried on the case, one marked ON OFF disconnects the cadence circuit when turned to OFF, the other, marked START STOP, locks the transmitter on the spacing bar so that a spacing current is

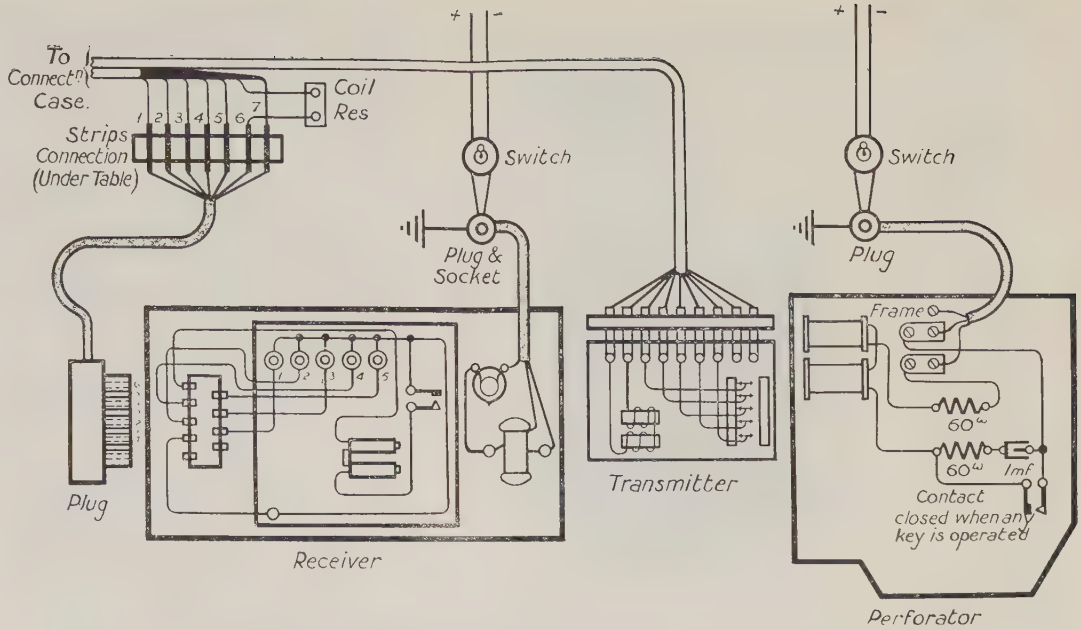

FIG. 363. AUTOMATIC TRANSMISSION CONNECTIONS, ONE CHANNEL

sent to line permanently when the instrument is idle and switch is to STOP.

The mechanism of the transmitter is shown in Fig. 365. There are five selector pins *SP*, one being shown in its raised or marking position. When *EM* is energized, attracting the armature *A*, any pins which have risen through the tape are retracted by the action of

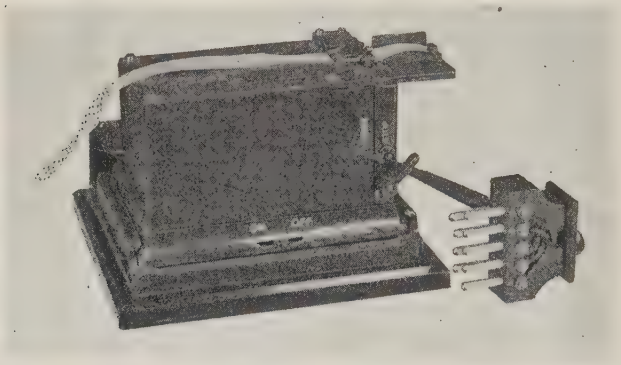

FIG. 364. MULTIPLEX TRANSMITTER

a pin retractor *PR* carried by the armature. The contact levers *CL* are then returned to the spacing contacts *SC* by the action of spring *RS*. The armature then acts upon the lever *L*, depressing it and so raising the feed rod *FR* which terminates in a pawl *FP*. The pawl engages a ratchet-wheel behind the star-wheel *SW*, and at each upward thrust of *FR* the slip is carried forward one centre hole. The armature is returned to normal by the spring *AS*. The tension lever *TL* now exercises an upward pressure on *SP*, which when a perforation allows, passes through the tape. The extension arm *EA* of *CL* is lifted so that *CL* is moved to the marking contact *MC*. Where a selector pin is prevented from rising by unperforated tape, the corresponding contact lever remains on the spacing contact. In this

manner the movement of the selector pins, governed by the tape, is communicated to the contact levers and determines whether a spacing or marking current is sent to line. The battery circuit from *CL* is made through the spiral spring *BS* to the instrument cord. The star wheel is steadied by a jockey roller carried by the lever *JL* which is controlled by a spiral spring *JS*. By means

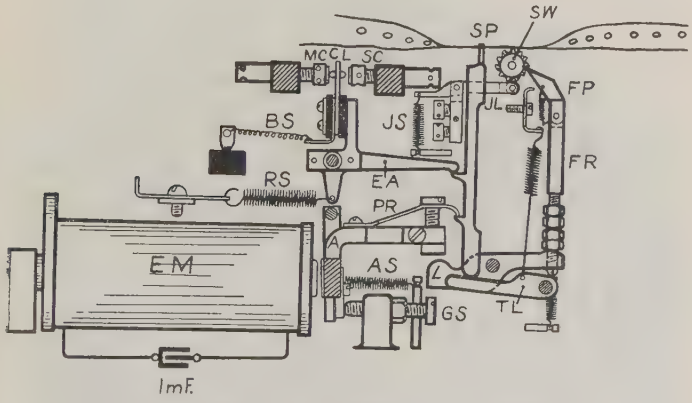

Fig. 365. Transmitter Mechanism

of the screw *GS* the play of the armature can be regulated.

Keyboard Perforator. The Booth-Willmot keyboard perforator* (Fig. 366) is used for auto circuits working at 35 words per minute. Higher speeds are possible, as the machine has been actually operated at 80 words per minute. The perforator has the standard Post Office layout of the keys, and machines are adapted to perforate either the *A* or *B* Baudot alphabets (Fig. 316) for use on inland or foreign circuits respectively. Beneath the key levers (Fig. 367) is an aluminium frame, not shown, capable of taking up two positions according to whether the letter or figure shift

* *P.O.E.E. Journal*, April, 1927, p. 5.

Fig. 366. Booth-Willmot Keyboard Perforator

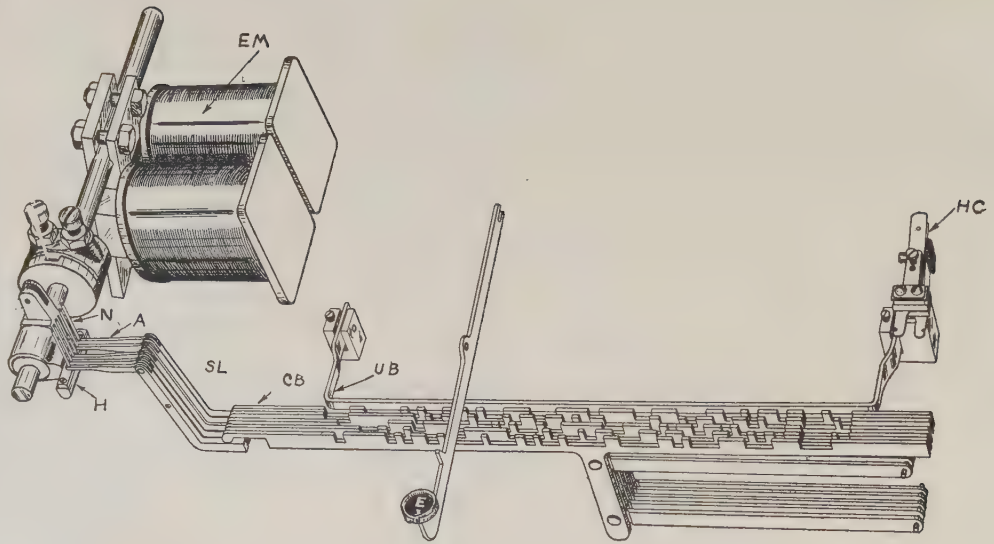

FIG. 367. BOOTH-WILLMOT KEYBOARD PERFORATOR

key is used. It contains the five code bars *CB*. When a code bar is depressed the corresponding selector lever *SL* withdraws its anvil *A* from the path of the punch-hammer *H*, so that the punch *N* does not perforate. The code bars are slotted to provide that in one position of the frame any key depressed perforates the tape for a letter, whilst in the second position a secondary character is perforated. The keys are arranged to select the punches which are not required to perforate. An important advantage accrues from this. If the operator accidentally depresses two keys simultaneously, more punches are withdrawn than necessary. In such a case the operator can back-space the tape one letter and actuate the correct key, erasure and repunching of the letter is avoided. The five code bars are slotted differently and are not interchangeable. Key levers when depressed pass either into slots and do not actuate the code bars, or, if depressed on a tooth, actuate the selecting lever to withdraw the corresponding anvil.

Electrical Circuit. The circuit of the punch electro-magnet *EM* is made by the lever *UB* closing the contacts at *HC*. *EM* has two coils, each of approximately 60$^{\omega}$ resistance. The operating current required is about 400 mA. The coils of the electro-magnet are connected on one side to a resistance of 60 ohms and on the other to the contact closed by the keys. The contact is shunted by a resistance of 60$^{\omega}$ in series with a 1 m.f. condenser to quench the spark arising from the cessation of the current in the electro-magnet. The frame of the machine is earthed to avoid the possibility of a shock to the operator should a fault occur. As the perforator is used with tape printing receivers, no lamp or bell circuit is required as a warning at each line. The total weight of the machine is 46 lb. It occupies a space 17 in. long and 12 in. wide.

Testers. Until recent years each channel of a Baudot circuit was equipped with a control receiver. The condition of a keyboard could be tested to a certain extent

at the circuit and adjustments were made until the dirigeur was satisfied with the signals recorded on the control tape. With the withdrawal of control receivers it became necessary to provide other means of testing and two testers for Baudot apparatus are in use.

The Booth Baudot keyboard tester consists of a wooden base provided with contacts to engage the keyboard, connections for battery, earth leads, and a key. An upright board attached to the base carries six small galvanometers. When a keyboard is placed in position for testing, positive and negative 40^{v}, from earthed batteries, is joined to the spacing and marking contact bridges of the keyboard. Circuits are thus made through the five contact springs and five galvanometers to earth. The sixth galvanometer is in circuit with the baseboard key, and cadence electro-magnet.

To test a keyboard, place it in position and switch on the battery. Galvanometers 1 to 5 should then be deflected to the left showing that the spacing contacts are in good order. Depress each key in turn and the corresponding galvanometer should be deflected to the right permanently. Depress the key on the baseboard momentarily. This should release all keys and reverse the deflection on the five galvanometers. The tester enables the locking of a keyboard and position of the contact springs to be regulated as directed in the section dealing with keyboard adjustments.

Tester for Use with Automatic Baudot Apparatus. This tester (Fig. 368) is fitted with a jack and plug joined in parallel to suit either type of receiver, a jack to accommodate a multiplex transmitter, and a socket connected to the power supply for motor drives. Baudot receivers in use on automatic sets have a hole drilled in the wooden driving pulley. When a receiver is connected to the tester a projecting pin fits into this hole and, by engagement with a bent lever, the commutator of the tester is rotated at the same speed as the receiver. The commutator is connected to a 40^{v} battery by a brush B. By means of brush B^{1} a Western

multiplex selector relay is actuated once per revolution. The local circuit of this relay contains the cadence electro-magnet of the transmitter. The cadence signal is therefore given once per revolution. The brush B^2 connects the 40^v battery, through a switch, to the spacing or marking terminals of the transmitter at will. The five sending contacts of the transmitter are connected through its jack to the receiver jack. The receiver is, therefore, actuated by direct single current impulses from the transmitter.

To Perform a Test. A slip is perforated with a series of *TG* signals, and passed through the transmitter. If printed correctly on the receiver the switch should be turned, to change the power over from the marking to the spacing terminal of the transmitter. The slip is re-run and should now print G.T. signals equally well. The tester, therefore, proves the condition of the keyboard perforator, the perforated tape, the transmitter, and the receiver.

The Murray Multiplex. This system was devised by Donald Murray as a combination of the best features of the Baudot multiplex and the Murray automatic systems. It comprises (i) Murray keyboard perforator producing cross-perforated tape; (ii) Murray transmitter with automatic stoppage of the transmitter when the transmitter overtakes the perforator; (iii) Murray distributor, single plate, with phonic wheel, reed drive and Baudot epicyclic correction gear; and (iv) Murray printer: this, however, has not been manufactured commercially and reception on such circuits is either by Baudot or Morkrum receivers. Creed has, however, recently designed a multiplex printer for use with the Murray multiplex system.

There is one other noteworthy feature of the present-day Murray multiplex. The distributor segments are connected by means of three multiple-way plugs and cords. This enables a distributor to be changed without interference with the permanent wiring and, moreover, it enables transmission to be advanced or retarded by

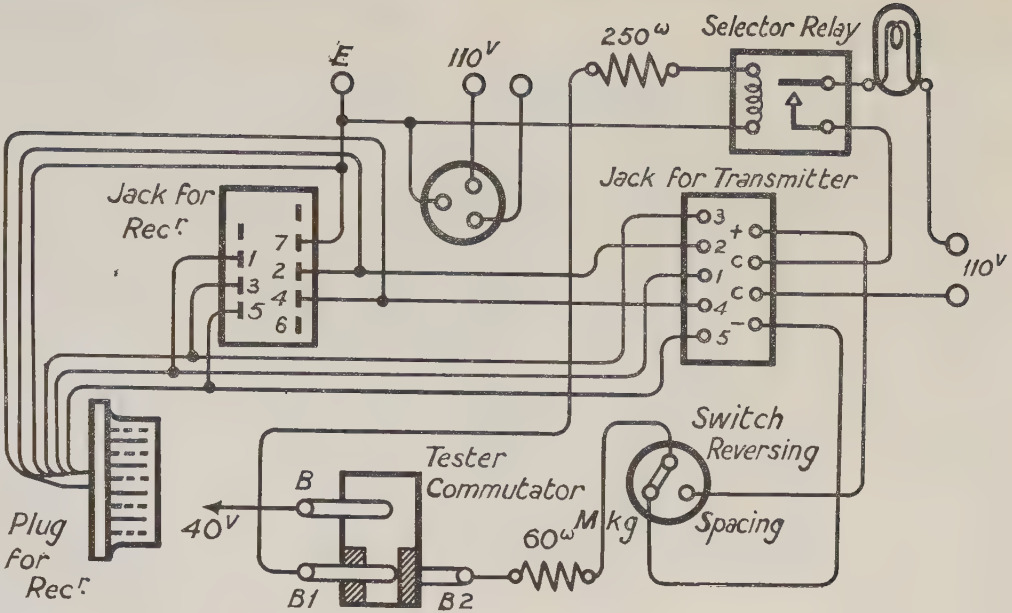

FIG. 368. TESTER, CONNECTIONS

withdrawing the plug and reinserting it forward or backward as required.

The Murray Keyboard Perforator. This perforator employs a five unit code, but differing from the Baudot code in the sequence of positive and negative currents forming a letter (Fig. 369). The paper tape is per-

		1	2	3	4	5			1	2	3	4	5
A		●	●				Q	1	●	●	●		●
B	?	●			●	●	R	4		●		●	
C	(		●	●	●		S	'	●		●		
D	²	●			●		T	5					●
E	3	●					U	7	●	●	●		
F	½	●		●	●		V	)		●	●	●	●
G	¾		●		●	●	W	2	●	●			●
H	⅝			●		●	X	£	●		●	●	●
I	8		●	●			Y	6	●		●		●
J	⅞	●	●		●		Z	.	●				●
K	9/	●	●	●	●		FIG SPACE	FIG SPACE	●	●		●	●
L	/		●			●	LTR SPACE	LTR SPACE			●		
M	,			●	●	●	LINE PAGE	LINE PAGE				●	
N	−			●	●		✳#	✳*	●	●	●	●	●
O	9				●	●	COL	COL		●			
P	O		●	●		●							

#12345 gives invisible correction on page printers & ✳ on slip printers.

Fig. 369. Murray Five-Unit Code

forated transversely, the feed hole being in line with the front curve of the perforations so that the direction in which the letters should be read is at once apparent. The keyboard resembles that of a typewriter. The keys *K* (Fig. 370) are poised above six selector plates *SP*, which extend across the machine. The upper side of the selector plates is serrated and when a key is depressed a wedge-shaped projection on its

underside engages the teeth of a particular group of selector plates, moving them to the right. Each selector plate has a bellcrank lever *BL*, at its left extremity. The horizontal arm of *BL* engages a notch in a vertical rod *IR*. In its normal position *IR* is between one of the five punches *P* and the punch-hammer *PH* carried by the armature *A*. When *SP* is operated, *BL* pulls *IR* down. Each time the punch electro-magnet *EM* is operated, *PH* strikes the rods

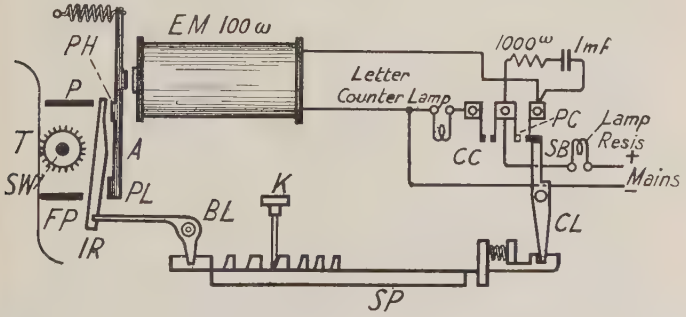

Fig. 370. Murray Keyboard Perforator

that have not been withdrawn. The blow is communicated to *P* which perforates the tape shown at *T*. One of the six selector plates, the third, counting from the rear, is operated by every key. Instead of a bellcrank lever this selector plate has a contact lever *CL* at its right-hand extremity. *CL*, by means of a small block *SB*, closes the circuit of the punch electro-magnet through contact *PC*. When the key is released the circuit is broken, *A* is restored by a spiral spring, and, by means of a pawl, rotates a ratchet and star-wheel *SW*. The feed-hole punch *FP* is struck every time the armature operates by the lower punch hammer *PL*, preparing the small holes engaged by the star-wheel. The feed holes are thus perforated before the tape reaches the star-wheel, and the signal-holes are perforated after the tape has passed up from the

star-wheel. By this arrangement every letter is visible *immediately* it has been punched.

The punch magnet is wound to about 100^{ω} resistance and requires a current of 300 to 400 mA. It is of a large size to prevent overheating. *PC* is bridged by a spark quench condenser. When the perforator is used in conjunction with a page printing receiver it is necessary to use the letter counting device.

The operation of the punch magnet armature feeds a rack along letter by letter, and on the completion of a line brings pressure to bear upon a rod which closes the contact *CC*, causing the red signal lamp to glow. Depression of the "start" or "Line-page" keys releases the rack which returns to zero. A back-spacing key used in conjunction with the erase key allows a signal to be sent to line without any effect upon the receiver. No trace of the erasure, therefore, appears on the printed message.

The Murray Transmitter. Murray apparatus is arranged to give the minimum possible distance between the perforating and transmitting points. The punching is done at the extreme left of the perforator and the transmission at the right of the transmitter. Actually, about sixteen letters or spaces intervene between perforation and transmission.

The operation of the transmitter is shown in Fig. 371. There are five contact levers side by side (only one is shown *CL*). They are insulated from each other and free to move on a common spindle *SP*. The upper part of *CL* plays between the battery contacts *S*, *M*. The contact levers are connected to the sending ring of the distributor as in a Baudot set. A spiral spring *SG* acting on *CL* tends to hold it on the spacing contact. The contact levers are operated by a horizontal projection on the control lever *CN*. An insulating stud *IS*, however, prevents electrical contact. A strong spring *SS* attached to *CN* overpowers *SG* and presses *CL* firmly against *M* when in the operated position.

The transmitter electro-magnet *EM* is actuated by a current from two segments of the local ring of the distributor. The current is timed to operate immediately after the line brush has passed the segments connected to the five contact levers. The attraction of *A* raises the lever *AL* which carries a roller *R* and a feed-pawl *FP*. The control lever has a rounded projection *RP* in the path of *R*. At every actuation

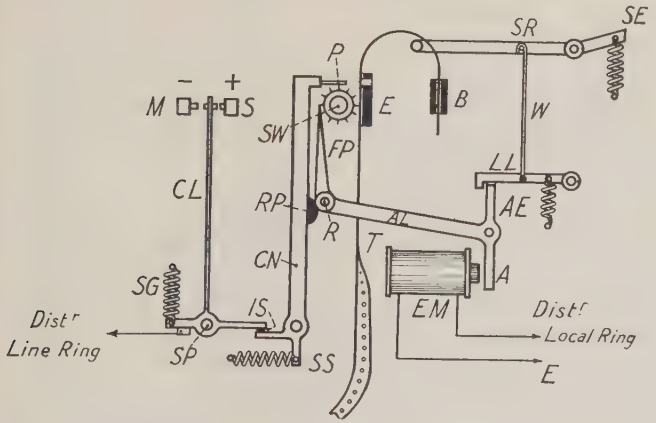

Fig. 371. Murray Transmitter

of *A*, the roller travels upward throwing *CN* back so that the pin *P* is withdrawn from the tape. At the same time *FP* engages a ratchet behind the star-wheel *SW* feeding the tape *T* down one letter space. When *A* is restored *R* travels down and the pins are pressed by the spring *SS* against the tape. If a pin is accommodated by a perforation the horizontal arm of *CL* is thrown up and its contact passes over from *S* to *M*. The next combination is thus prepared for transmission.

Use is made of the automatic start and stop referred to in an earlier chapter. The tape passing

from the perforator punch-block B forms a short loop before passing into the transmitter at E.

A rod SR projects at right angles under the loop, its extension SE has a spring tending to elevate SR. The locking lever LL and spring is placed above an armature extension AE. A wire link W couples LL and SR. When perforation lags behind transmission the tape tightens, SR is depressed, and the spring of LL prevails. LL however, can only drop when the armature is attracted. This takes place after the contact levers have been restored to the spacing contact. When A is locked by LL, therefore, five spacing currents are sent to line until further perforated tape is prepared and SR is allowed to rise. Mutilation of the tape or a disconnection in the transmitter is thus avoided.

The electro-magnet has approximately 180 ohms resistance and requires a current of from 300 to 400 mA.

The Murray Re-perforator. This instrument is intended for use at an intermediate office in cases where a considerable amount of re-transmission is required. The re-perforator can be switched in to replace a receiver. An exact replica of the sending tape is then reproduced from the line signals. The construction is very similar to the perforator already described, but the permutations set up by five electro-magnets replace the keyboard operations. Punching is controlled by a cadence electro-magnet operated from the local ring of the distributor.

The actuation of any selector electro-magnet sets the corresponding vertical rod between the hammer and a punch. When the cadence electro-magnet is operated, it closes the contacts, completing the circuit of the punching electro-magnet which operates as in the case of a perforator.

There is no field for the instrument in the British Post Office, as three-station circuits, with the intermediate

station equipped with retransmitters, serve the same purpose very efficiently.

The Murray Distributor and Connection Case. The Murray and Baudot distributors differ in several details. The brush-carrying gear and plate of the former are enclosed by a glass cover hinged on the right-hand side of the case. A back plate is not used normally, but can be fitted if required. A red bead surmounting a thin rod rises and falls to indicate the

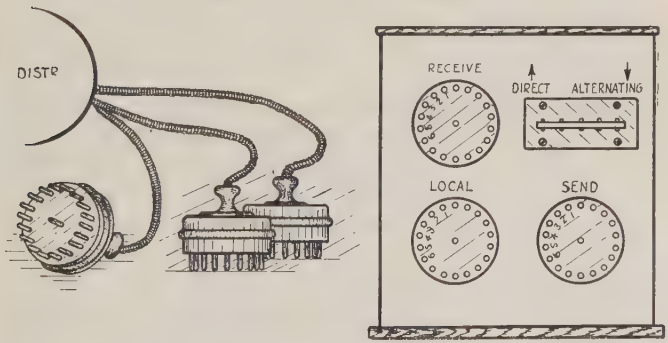

FIG. 372. MURRAY PLUGS AND CONNECTION CASE

frequency of the correction, replacing the flag indicator. The brush carriers are a fixture upon the arms, secured by a compound that can be readily melted if a fresh position is desired.

The wiring from the segments is carried out by means of three heavily armoured flexible cables, each terminated by a plug with 18 pins, for a three-arm installation. Seventeen pins, corresponding to the segments, are arranged in a circle and the eighteenth, connected to the relative solid ring, is in the centre. The three plugs are for the sending, receiving, and local rings.

The connection case (Fig. 372) has three sets of sockets, arranged to accommodate the plugs, wired

to the local apparatus. A switch is associated with the sending sockets which enables reversals to be sent to line if required for the purpose of testing or adjustment; a much quicker and more reliable method than locking the individual keys or transmitters. The advantage of the Murray method is that the brushes can be made to take up any desired relationship to the rings very quickly, and in steps of one segment instead of two as with the Baudot collar adjustment. Possible disadvantages are, that due to accident or careless handling a pin may be bent, and dirt or wear may cause a faulty connection between the plugs and sockets.

The Creed Multiplex Printer. This printer is used in connection with the Murray multiplex. It is claimed that it will operate at the highest speed obtainable on a multiplex installation. The five selector electro-magnets, requiring 25 mA to operate, are joined to the distributor receiving ring; a sixth electro-magnet is connected to the local ring.

The principal operations of the machine will readily be followed by the aid of Fig. 373. Only one of the five selecting electro-magnets S is introduced. When S is operated, its armature A tilts the near end of the latch L and lowers the selecting finger F attached at right angles to the extremity of L. In this position a spring beneath L can act and F slides beneath the comb extension E. A projection PN on L operates the long trip lever TL which is pivoted at C. The remote end of TL engages a slot in the release lever RL. A projection P on the armature AS of the sixth electro-magnet SE also engages a slot in the upper end of RL. While the selector electro-magnets are in their rest position TL prevents the armature of SE operating; should a latch be actuated, however, its movement will rotate TL and RL freeing the armature AS, so that the detent is operated when the local impulse is received. The release of the detent results in the

camshaft making one complete revolution. The cam has four tracks; as it commences to revolve it first moves the tape forward the space of one letter and sets the mechanism for restoring the fingers *F* to normal. It should be noted that the printing of a letter takes place one revolution later than the setting of the electro-magnets. The printing hammer *H* is next

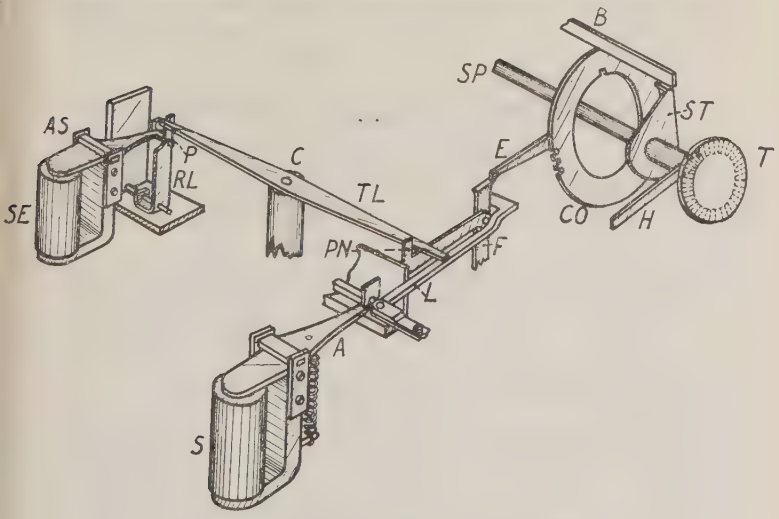

FIG. 373. CREED MULTIPLEX PRINTER

operated and records on the tape the character in position. The bellcrank levers are then lifted, to free the combination combs from the last setting. Lastly, the fingers are raised, and those that have passed under the extensions shift their respective combs.

The five combs *CO* having been set in a given combination, at one point a longitudinal slot is opened across them, allowing a spring controlled bellcrank lever *B* to drop in. The five combs are mounted side by side on a drum. Their movement is limited to a fraction of a revolution. Passing through the axis of the drum

is a spindle *SP* which rotates the typehead *T* and the stop-piece *ST*. When *B* drops, its outer end projects into the path of *ST*, arresting the typehead while *H* strikes the type character and prints it on the tape. The discrimination between letters and secondary characters is made by means of a sixth comb. This comb is actuated by two bellcrank levers operated from the keyboard by means of the figure and letter shifts. The comb takes up one of two possible positions, thus closing one set of slots and opening the other.

THE WESTERN ELECTRIC MULTIPLEX

The main points on which the Western Electric system, as used by the British Post Office, differs from the Baudot and Murray systems already described are—

1. Single-plate distributors are invariably used.
2. The distributor plate is composed of eight rings.
3. The phonic-wheel motor is controlled by a massive tuning fork.
4. Synchronism is maintained by control of the vibrator.
5. Correction is obtained from the working signals.
6. One source of power is used for all the local circuits.

The keyboard perforator punches circular holes across a paper tape similar to that used in the Murray perforator. The method of selection is slightly different, and an indicator is used in connection with the line-feed signal. The Western Electric transmitter and Morkrum typebar column printer, described elsewhere, are employed for transmission and reception respectively. The four pairs of brushes are arranged to bridge three intervening rings. Numbering the rings from the outer inwards the connections, in the relative pairs, are as follows—

*R*1. 40 segments. Alternate segments to receivers in groups of five. The intervening segments are not in

use, but may be joined up to give an indication to the operator.

*R*5. Continuous ring. Tongue of printer relay.
*R*2. 40 segments. Coils of correcting relay.
*R*6. Continuous ring. Tongue of leak relay.
*R*3. 20 segments. Transmitters in groups of five.
*R*7. Continuous ring. Split of line relay.
*R*4. 20 segments. Transmitter cadence and printer release magnets.
*R*8. Continuous ring. 110^{v} positive.

As correction is derived from the working signals a quadruple installation requires only 20 segments for the transmitting ring instead of 22 as in the Baudot and Murray systems. Economy of line time, and a slight increase of speed is thus obtained. Where the line has considerable K.R. and the margin for working is small this is an advantage, but against this must be put the two extra rings and additional relays introduced.

The speed of the correcting station distributor is fixed at 240 revolutions per minute, equivalent to 40 printed words per minute for each channel. The corrected station runs slightly slower. The method of correction accelerates the motor and phase is kept within certain limits. Fig. 374 shows in diagrammatic form the connections of the apparatus.

The outgoing signals pass from the transmitters to the split of the line relay via rings 3 and 7. The incoming signals operate the line relay, causing it to repeat the signals through the coils of the leak and printer relays in series. The tongue of the printer relay repeats the signals into the printers via rings 5 and 1. The correcting segments of ring 2 are joined up in two groups, alternate segments being connected to each other. One group of segments is connected to the *U*-circle terminal of the correcting relay, the other group to the *D* terminal.

Correction. The leak relay follows the movements of the line relay but, since electrical action is quicker than mechanical, a short period of time intervenes between the " make " of the line relay tongue and the " make " of the leak relay tongue. While the line relay tongue is on *S* contact, the leak relay tongue is also on *S* contact. When the line relay tongue moves over to *M* contact, during the momentary period before the leak relay tongue follows there is no path for a current since the *S* contact of leak relay is disconnected. When the line relay tongue returns from *M* to *S*, however, before the leak relay tongue can follow, a pulse of positive current passes via *T* and *S* of line relay, *M* and *T* of leak relay, 500^{ω} resistance to *R*6. The brushes connect to *R*2 and thence via an *A* or *B* segment to the correcting relay. If the brush is on an *A* segment the motor is relatively fast. The positive current through the correcting relay coil brings the tongue of the relay to marking.

The circuit of the vibrator electro-magnet is from 110^{v} positive, through a lamp resistance, 400^{ω} resistance, electro-magnet, vibrator, to 110^{v} negative. It will be seen from Fig. 374 that if *T* of the correcting relay is on the *M* contact, the lamp resistance is short-circuited. The cutting out of this resistance increases the vibrator current, the amplitude is therefore increased and the speed diminished, but we have shown before that if the motor is fast the relay is operated in the marking direction. The speed continues at a slower rate until the pulse of current is received on a *B* segment. The correcting relay is then restored to spacing and the lamp resistance comes into circuit resulting in a slight increase of speed. The speed, therefore, wavers each side of a zero line. It will be noticed that 110^{v} negative is connected to the centre of correcting relay coils. When the line relay tongue is on *M* contact there is no path via the correcting relay. The pulse of current generated when the line relay passes from *M* contact to *S* contact is the sole means of correction. To ensure correction during periods when all four transmitters may be idle, two transmitters use positive for spacing and two use negative. Two reversals of current, at least, occur during each revolution. This arrangement, of course, necessitates two printers being served from each local contact of the printer relay.

Position Finding. A cam switch is provided at each station in order that the brushes of the two distributors may be brought into phase. At the correcting station the switch, in its " phasing " position, changes the polarity on the spacing bar of the second arm transmitter so that the first three arms space with positive and the fourth with negative. In the same

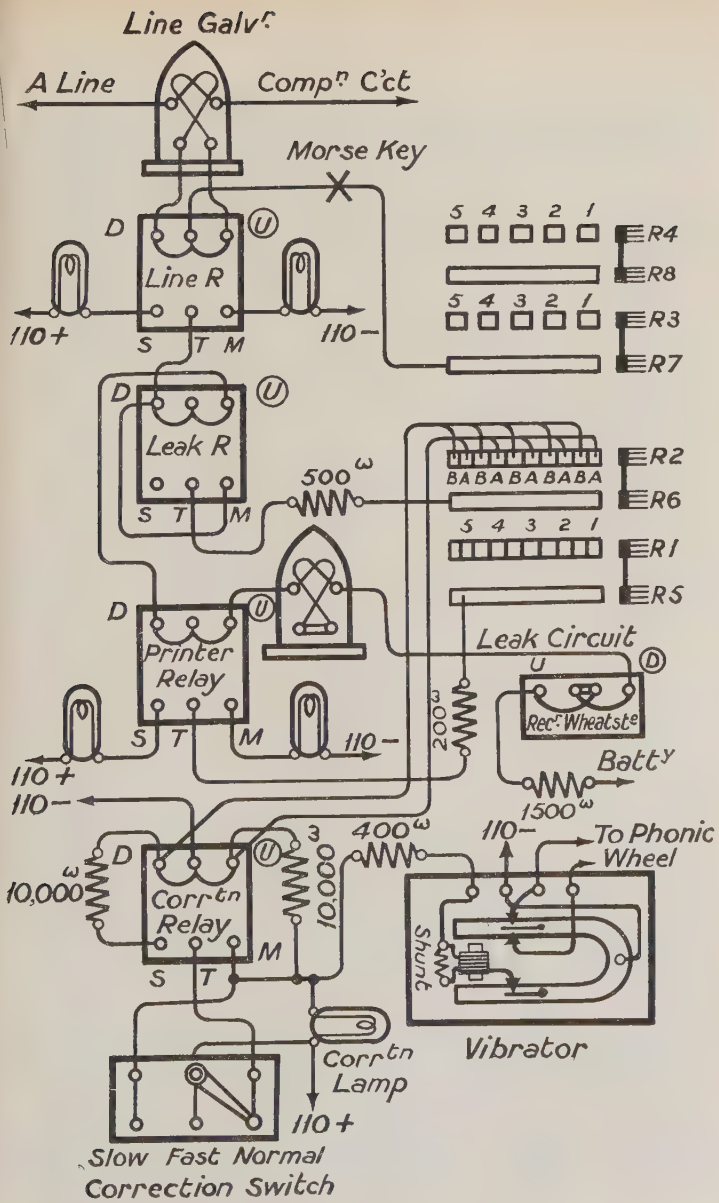

Fig. 374. Western Electric Multiplex Connections

position the switch joins the positive power permanently to the cadence magnets of the four transmitters, locking all the contact levers on the spacing contacts and also disconnects the circuit of the cadence segments *R*4. The correcting station thus sends positive to line from 15 segments and negative from 5 segments, so that only one correction impulse is generated each revolution. At the corrected station, the cam switch, in addition to making the changes enumerated, joins the 40 correcting segments of *R*2 into two groups of 20 segments each, half the ring forming group *A* and half group *B*. While the brush is on the *A* group during the operation of a correction current, the correcting relay short-circuits the correction lamp and the motor runs relatively slow. When the brush reaches the *B* group the current through the correcting relay is reversed, the correcting lamp operates and the motor speed is accelerated. If the relative speed of the two motors and the tuning fork adjustments are correct, the phase relationship will now be maintained. When the corrected station is satisfied with the speed conditions the correcting station is asked to release the cam switch. This allows the transmitters to function normally, sending two reversals to line each revolution. The corrected station orientates the receiving ring to obtain the best position, and then gives the correcting station open transmitters for orientation also.

It should be mentioned that the Western Electric system uses the pin and socket connection case, and the correcting station takes up the line retardation by this means.

The apparatus at a correcting station is simplified, as line and printer relays only are required.

The speed of the motor can be kept under observation by the stroboscopic method. A metal shutter is attached to the end of each tine of the tuning fork. Each shutter has a narrow slit. The rim of the phonic-wheel motor is divided into bands of black and white, and a glow lamp with a switch is situated close up so that a strong light may be thrown upon a portion of the wheel. When the tuning fork is vibrating and the motor is watched through the slits in the shutters, the bands appear to be stationary so long as the speed is constant.

Modifications of the System. In an older installation a buffer, operated by an electromagnet, connected to the correcting relay, varies the rate of vibration of the tuning fork by striking it each time the correction relay is actuated. As used by the Western Electric Co. in America, the distributor has independent

sending, receiving, and correcting rings. The brushes are mounted on a shaft running through the centre of the plates. The advantage secured is that, the sending and receiving plates being independent, there is no definite relationship to maintain. The receiving plate may be swung into its position for reception as soon as synchronism is held.

Rotary Repeaters. Rotary repeaters are much used in America in connection with the Western Electric system. Their advantage over the ordinary form of telegraph repeater lies in the fact that signals are entirely regenerated, that is to say, however attenuated the incoming signal, the repeated signal has the time contact value of a full segment. The method has points of resemblance to the three or more station Baudot circuits in Great Britain worked by means of re-transmitters. The Western Electric installations make use of a bank of relays to store the signals, thus obtaining retransmission with a gap of one segment only.

MORKRUM TYPEBAR PRINTER

The Morkrum Co., New York City, U.S.A., have a page printer unit on the market. It may be used in combination with a Murray or Western Electric keyboard and transmitter, and will receive signals up to a speed of 65 words per minute. The machine has a typebar basket similar to a typewriter. The typebars are thrown up against a platen, printing the particular letter through the ink ribbon on to a paper roll. The selection of a typebar depends upon the setting of five code bars, whose movements are governed by five electro-magnets connected to the segments of a Baudot distributor. The code bars are notched on the under edge. A given combination permits a particular push bar to rise through a channel made by the aligned notches, into the path of a hammer lever. The hammer operates the push bar and sets the typebar in motion. The necessary movements to secure letters or figures,

line feed, spacing, and carriage return are made by mechanical means. The electrical apparatus consists of five selector electro-magnets, and a sixth whose function it is to start the cycle of operations of the machine.

The train of movements may be followed in Fig. 375. When the armature M of the selector electro-magnet EM is operated the plunger P pushes the upper end of latch L so that its lower extension disengages the selector lever SL. The vertical arm of SL, by means of a spring S_1 then brings pressure to bear upon the code bar moving it to the left. L and M are restored to the rest position by spring tension immediately the signal ceases. While EM is being operated the lock lever LL is raised from CB, and the reset bail RB is free from SL, but as soon as the shaft AX is in rotation cam C_1 allows LL to be pulled down into one of the notches in the upper edge of CB, holding the latter steady while printing is taking place. Immediately afterwards cam $C6$ comes into action, allowing spring S_3 to operate RB so that the selector lever is restored.

When the code bar combination has been set the sixth pulse electro-magnet SP is operated. The movement of its armature A sets the main shaft in motion, and starts the operating cycle of the printer. The shaft makes one complete revolution each time the armature of SP is operated.

Each typebar TB (Fig. 376) is linked to its push bar PB by two levers L_1 L_2. In its rest position PB is depressed by DP against the tension of S_5. When the printing magnet SP has been operated, C_5 on the main shaft operates DP by means of rod R. This allows the push bars to rise and enter the slots lined up in the code bars according to the selection made. The corner C of the push bar is now in line with a hammer lever HL. At a particular point in its revolution a cam C_3 releases the pull on HL exerted by rod R_1 allowing spring S_2 to push PB through the

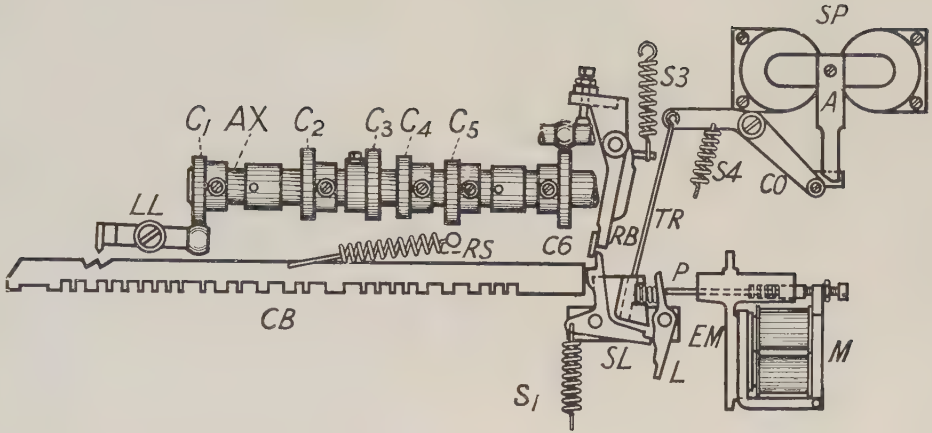

Fig. 375. Morkrum Typebar Printer

medium of HL and C. PB transmits its motion to TB, resulting in an upward thrust to the platen. A safety cam C_4 ensures that the movement of TB is not excessive. When PB has been restored by the depression of DP, CB is returned to the normal position by a replacing spring RS. Spacing, after printing, is effected by means of cam C_2 operating a rack and pinion movement. When spacing only is required the combination received actuates the code

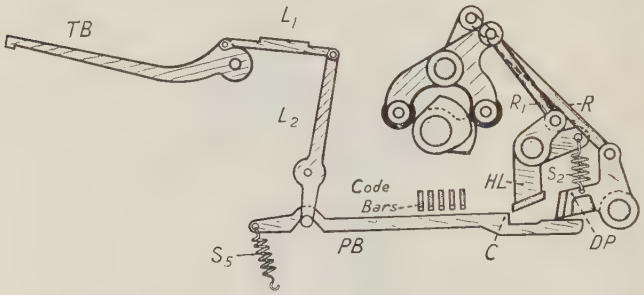

Fig. 376. Morkrum Typebar Printer

bars, but no push bar is associated with the spacing parts so that a revolution of the shaft is made and all the operations performed except printing.

A single-stroke bell signal may be given in response to a code combination, usually the secondary to letter A. The push bar in this case operates a bell hammer connected to L_1 in place of a typebar. Where the printer is connected to a distributor SP is energized every revolution of the brushes by a local current. This would cause a continuous action of the printer unless some method were adopted to prevent SL operating except when signals are actually received from line. The difficulty is overcome by means of a cut-out lever CO, the lower end of which is held up by a spring S_4, so that it obstructs the armature A of SP. TR is a thin rod resting upon the selector levers. When SL

is operated TR receives an upward thrust from the horizontal arm and CO moves downward, leaving the path of A clear.

The printer is driven by a small motor connected to the electric light supply.

Morkrum Multiplex. The segmented rings and rotating brushes of the ordinary Baudot distributor are replaced by a series of contact springs which are opened and closed by circular slotted cams mounted on the main axle, the speed

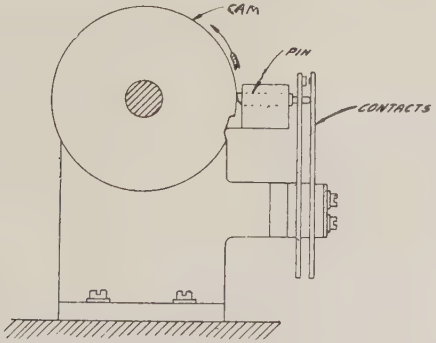

Fig. 377. Principle of Morkrum Cam Multiplex

of which is controlled in an ingenious manner by a tuning fork having two tines. Correction is effected by energizing a braking electro-magnet applied directly to the ends of the fork. Moreover, the correction is generated from the received signals.

The cam distributor was introduced to deal with cases where heavy line currents were used and serious sparking on the distributor was inevitable. It is improbable that the arrangement will be used in this country. The general principle of the cam distributor will be apparent from a consideration of Fig. 377. A small pin moving in a guide is associated with each cam and pair of contact springs. One end of the pin passes through a hole in the inner spring and presses against the outer spring. When the inner end of the pin rides on the high part of the notched cam the outer spring is held away from the inner one. When the pin drops into the cam notches the contacts are closed. Each pair of contacts is controlled by a separate cam.

CHAPTER XVI

START-STOP TELEGRAPHS

These instruments have typewriter keyboards for sending, while at the receiving end each character, after it has been mechanically selected, is printed in Roman characters on a paper tape. The keyboard is not subject to a cadence signal, hence it can be operated at any speed up to the maximum for which the particular instrument is geared. The duration of a signalling impluse remains the same, however, irrespective of the speed at which the keyboard is operated. The five unit Murray code is used, but each combination transmitted is prefixed by a start signal and is terminated by a stop signal. The former is of the same length as a code impulse, while the latter is one and a half times as long, hence the alphabet is in effect one of $7\frac{1}{2}$ units. The addition of these start and stop currents to the five unit code constitutes the reason for the generic term " Start-stop " instruments.

The four types of machine in use by the British Post Office have a number of features in common. Each is driven by a small electric motor running continuously, but the transmitting and printing mechanisms are normally at rest, and are only coupled to the motor drive when signals are being transmitted or received.

Thus the depression of a key causes the engagement of a clutch, which results in a single revolution of the transmitting cam spindle or sleeve as the case may be. This governs the transmission of the seven signalling impulses which are sent out in regular sequence. At the receiving end the electrical impulses operate a single electro-magnet; the first movement of its armature by the start signal effects the engagement of the

receiver clutch, which couples the selecting and printing mechanism to the motor drive. The passage of the five code impulses through the electro-magnet, and the successive resultant movements of the armature, govern the mechanical selection and printing of the required character. The stop signal then causes the receiving clutch to disengage and the printer mechanism to be brought to rest.

It is impossible to run two or more teleprinters at exactly the same speed. However delicate the controlling mechanism may be, there is inevitably a slight difference in the speed of any two units working together. In order, therefore, to prevent this difference from accumulating, it is arranged on each type of machine that the receiving shaft shall run slightly faster than the transmitting shaft, and that, therefore, the former shall come to rest a little in advance of the latter. Thus, although the transmitting shaft may revolve continuously the receiving shaft will come to rest at the end of each revolution for a period which will vary slightly according to the difference in speed existing between the two. For this reason no correcting signal or correcting mechanism is required, and there is a greater speed tolerance than in the case of multiplex installations.

The first teleprinters used by the Post Office were of American origin, and were known as teletypes. The latest type-bar teletype, like the Creed machine, has a working speed of 60 words per minute. F. G. Creed, has also developed a column printer, but it seems unlikely to be used for ordinary telegraph work, because invisible correction of errors cannot be provided. Moreover, such machines are more costly to provide, and more costly to maintain. For press work and on private wire newspaper circuits the invisible correction of errors is of little moment when set against the advantage of having "copy" in the form of long sheets.

Teleprinter Multiplex. The suggestion has often been made that, in order to reduce to a minimum, the different types of apparatus employed in an instrument room, the perforator, transmitter, and receiver used for Auto. Baudot working should be replaced by teleprinters, controlled by a cadence signal from the distributor. This plan was tried out about twenty years ago and rejected because it seriously slowed down the speed of working. The advantage of the free keyboard secured by the Auto Baudot would be lost in any teleprinter multiplex system.

It would follow that the teleprinter keyboard must be locked by the cadence to ensure that only one key per revolution could be depressed. Certain modifications of the distributor would also be necessary. As regards the sending ring, since the transmitting tongue of the teleprinter could be joined direct, one long segment for each instrument would suffice. On the receiving ring, to prevent overlapping from phase distortion, shortened segments would probably be necessary, and as the teleprinter uses a $7\frac{1}{2}$ unit code, additional segments would be required. Teleprinter signal speed is 66 printed words per minute, and to accommodate this the distributor of a teleprinter double multiplex must make approximately 347 revolutions per minute. The difficulty of keying to a cadence at this rate will be realized.

The $7\frac{1}{2}$ unit code represents a 50 per cent increase in the working speed of the line to give the same margin of operation as a multiplex, with correction generated by the signals. The ratio between the actual working speed of a circuit and its possible maximum speed may be regarded as a factor of safety or working margin. This determines the reliability and stability of the channel. Over any short distance where the working speed of the line is not approached, the annual charges on the extra line plant required for ordinary direct teleprinter working would be much less than those of a multiplex.

CREED COMBINED TRANSMITTER PRINTER (TELEPRINTER 3A)

This instrument has been extensively adopted by the British Post Office, and is officially designated "Teleprinter 3A." Fig. 378 shows the instrument with the cover in position, and Fig. 379 a general view of the operating mechanism. The cover has two hinges, and can either be lifted back or it can be removed

Fig. 378. Teleprinter 3A

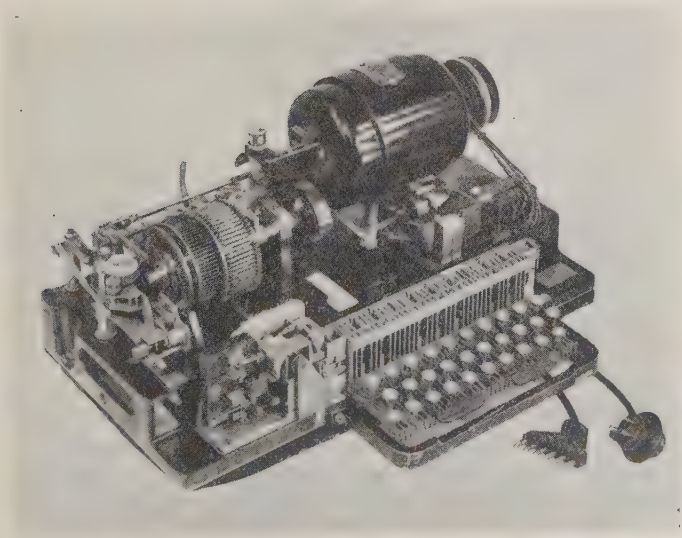

Fig. 379. Teleprinter 3A with Cover Removed

bodily when required. It is lined with felt and, with the exception of the keys and paper platen, completely encloses the moving parts, thus rendering the machine particularly quiet when it is being operated. The whole of the mechanism, together with the motor, is mounted on a cast metal base, beneath which is a thick felt pad. The plugs and cords shown are supplied to the manufacturers by the Post Office in order to ensure complete interchangeability of apparatus. The three pin plug, together with a socket which is mounted on the instrument table, provides the connections between the motor leads and the power supply, and between the instrument frame and earth. The object of this earth connection is to eliminate the risk of shock to the operator, in the event of defective insulation of either the motor or battery leads. The six-pin plug fitting into a jack, also mounted on the table, forms the connection between the internal leads of the teleprinter and the external circuit wiring.

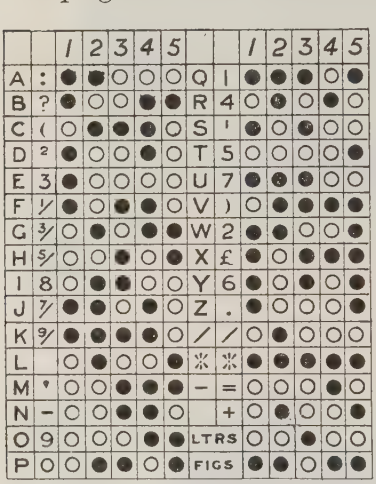

Fig. 380. Signalling Code, Teleprinter 3A

The five-unit code used is shown in Fig. 380. Since there are only thirty-two possible combinations of this code, numerals and other special characters are selected and printed, as a result of the same signal combination as that employed for letters. When letters are being printed, the change to figures is accomplished by transmitting a signal termed the "figure-shift," and the change back from figures to letters is effected

by transmitting the " letter-shift " signal. These shift signals are sent by means of spacing keys on the keyboard, labelled respectively " figures " and " letters."

Received messages are printed on a blue gummed paper tape, by means of an inked typehead. The printed tape is passed over a water-wheel, which moistens the gummed surface, and the tape is then pasted on to a telegraph form.

The machine can be operated at any speed up to 60 words per minute, at which speed a skilful operator can transmit for long periods.

TRANSMITTER UNIT

Transmitter Clutch. The operations of the transmitter unit are performed by means of a cam sleeve,

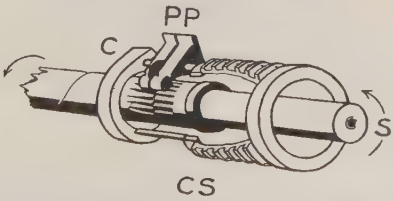

Fig. 381. Transmitter Clutch Detail

which is under the control of any one of the thirty-two key-bars constituting the keyboard. When a key-bar is depressed, a clutch is operated and the cam sleeve is caused to make one revolution; during this period the signal combination for the selected character is transmitted. Fig. 381 shows the details of the clutch. *S* is a spindle on which two sets of ratchet teeth are cut, one set being slightly in advance of the other. The spindle is geared to the motor drive and rotates continuously inside the cam sleeve *CS*. Pivoted on *CS* and immediately above the ratchet teeth are two pawls *PP*, the hooked ends of which tend to engage the ratchet by the action of a circular pawl

spring *PS* (Fig. 382). This exerts pressure on the lower part of the pawls, in the direction indicated by the arrow. The pawls, however, are normally prevented from engaging the ratchet by the pawl abutment *PA*, one end of which is held against the upper extremities of the pawls under the tension of spring *S*1. Thus, if the pawl abutment is caused to move on its spindle so as to clear the pawls, one of the latter will immediately be forced by *PS* into engagement with its corresponding set of ratchet teeth, and the cam sleeve will revolve.

The provision of two pawls and the staggered sets of ratchet teeth has the same effect as one pawl and one

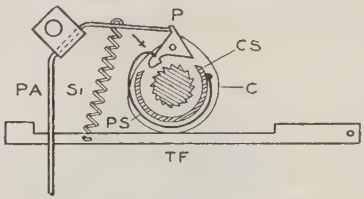

Fig. 382. Section through Transmitter Clutch

set of closer cut teeth. The former arrangement, however, has distinct advantages, viz. there is less tendency for pawls to slip, due to closely cut teeth, wear, or inadequate tension of pawl spring. Moreover, if one pawl is broken, the other still functions; the pawls can be made stronger, and wear and tear, due to the constant operation of the clutch, is considerably lessened.

Transmitter Clutch Trip Mechanism. Fig. 383 shows the clutch trip mechanism. *KB* is a keybar having a small projection *X*. Immediately beneath the projection, and extending across the width of the keyboard is a trip bar *TB* rigidly fixed by supports to the trip-bar spindle *TBS*, pivoted at *BB*. One end of the trip bar is forked and embraces a pin at the back of the trip bellcrank *TBC*. The latter is clamped by

a clamping screw to one side of the trip bellcrank lever *TBL*, and is made adjustable by means of the eccentric screw *E*. On the other side of *TBL* is connected a trip finger *TF*, the free end of which is held within the lower forked end of the pawl abutment *PN*, by spring *S*1.

When *KB* is depressed, the whole of the keybar moves vertically downwards and projection *X* acting on *TB* turns *TBS* slightly in its bearings *BB*. As *TB* moves downwards, *TBC* and, consequently, *TBL*

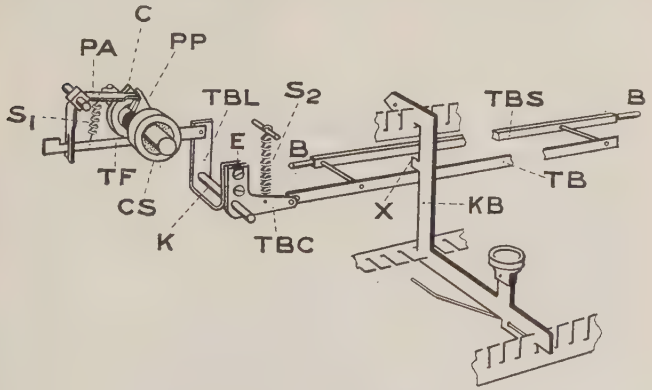

Fig. 383. Transmitter Clutch Trip Mechanism

turn in a clockwise direction on the spindle *K*, thus moving *TF* endwise to the right. The edge of the step on *TF* catching the forked end of *PA*, turns the latter and lifts its upper end away from the pawls. One of these is immediately forced into engagement, and the cam sleeve commences to rotate.

Mounted on the cam sleeve to the rear of the pawls is a single cam *C*, clearly shown in Figs. 381 and 382. As this cam rotates, it pushes down the trip finger *TF* to a sufficient extent for it to disengage from *PA*. The latter is thereupon immediately restored to its normal position by spring *S*1, so that its upper end is in position to intercept both pawls and to cause, whichever pawl

is engaged, to be withdrawn from the ratchet. The cam sleeve is thus brought to rest at the end of one revolution.

As *TF* is held by spring *S*1 against the surface of cam *C*, it rises soon after *PA* is released. The latter is then in its normal position, so that *TF* is brought to rest with the upper edge of its step against the top of the fork in *PA*. The clutch, therefore, cannot again be tripped until *TF* is restored. When *KB* is allowed to rise under the action of its restoring spring, *TB* also rises under the tension of spring *S*2, *TBC* and *TBL* move anti-clockwise and *TF* is thus moved to the left.

Combination Bars and Selecting Levers. The depression of a keybar, in addition to operating the transmitting clutch, determines the positions of five combination or code bars, which control the sign of the electrical impulses transmitted. The combination bars labelled *CB*1–5 are shown in Fig. 384.

Each bar has on its upper edge a number of square projections, three of which are shown, arranged in accordance with the code used, and the position of the individual keybars. Where projections occur on the combination bars, they are aligned in each case slightly to the left of the upper portion of the keybar associated. Attached to the combination bars are five springs *CBS*1–5, which tend to pull the bars to the right. Any movement in this direction, however, is prevented by the reset lever *RL* when the cam sleeve is at rest. The upper end of *RL* rests on the periphery of cam *C* (previously mentioned), whilst the lower end is so shaped as to lie across the whole of the five combination bars. Each of the latter has a raised portion, the edge of which butts against the lower end of *RL*, thus holding the combination bars against the tension of their springs. Fitted to each combination bar is a vertical extension *E*, which lies directly beneath one end of an associated selecting lever. There are six

selecting levers in all, five of which (*SL*1–5) are associated with the five combination bars and extensions,

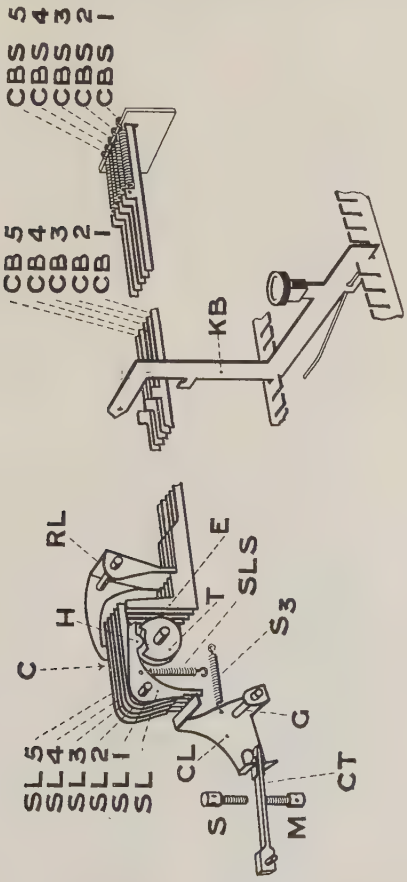

Fig. 384. Combination Bars and Selecting Levers, Etc.

and a sixth selecting lever *SL* (shown broken) which governs the " start " signal, as described later.

Each selecting lever has a circular hump, *H*, which rides in its associated cam track under the tension of a selecting lever spring, one of which *SLS* is shown.

The cam tracks are drawn as separate cams in order to indicate clearly the action of the selecting levers. Actually the tracks consist of six parallel grooves cut in the cam sleeve.

Fig. 385 shows sections through each of the cam tracks, which are labelled respectively T, $T1$, $T2$, $T3$, $T4$, $T5$. It will be seen that a slot occurs in each track, and that the six slots are staggered with respect to one another, while each overlaps the other by a half, with the exception of T and $T1$.

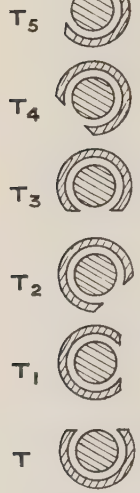

Fig. 385. Transmitting Cam Sections

Contact Lever and Contact Tongue. To the left of the selecting levers (Fig. 384) is a contact lever CL, the lower portion of which is forked so as to embrace one end of a contact tongue CT. It will be noticed that the hump H of the first selecting lever SL lies in the slot of cam track T, this being the normal condition when the cam sleeve is at rest. The lower end of SL thus holds the contact lever CL against the tension of spring $S3$ in such a position that the contact tongue lies on contact screw M, which is connected to the marking pole of the line battery. A permanent marking current is thus normally sent to line.

Operation of Combination Bars. When the cam sleeve commences to revolve as a result of the depression of a keybar, cam C will allow RL to turn slightly in an anti-clockwise direction on its spindle, due to one or more of the combination bars being pulled to the right by their springs. As the upper portion of the depressed keybar will, however, be in the path of projections on some of the combination bars, the keybar will prevent these from moving.

Fig. 386 shows the conditions obtaining when the keybar for the letter R is depressed. Combination bars

1, 3, and 5 are held, as these have projections immediately to the left of that particular keybar; while Nos. 2 and 5 are moved to the right by their springs.

Start Signal. Referring to Fig. 384, immediately the combination bars are positioned the hump on the first selecting lever *SL* rides out of the slot in the cam track *T*. The lower end of *SL*, in moving to the right, allows spring *S*3 to turn *CL* clockwise on spindle *G*, so that the contact tongue *CT* is moved from contact screw *M* to *S*, which is connected to the spacing pole of the line battery. The spacing current thus sent out constitutes the start signal, and as this signal precedes every character combination transmitted, the first selecting lever is not controlled by a combination bar, and is consequently actuated during every revolution of the cam sleeve.

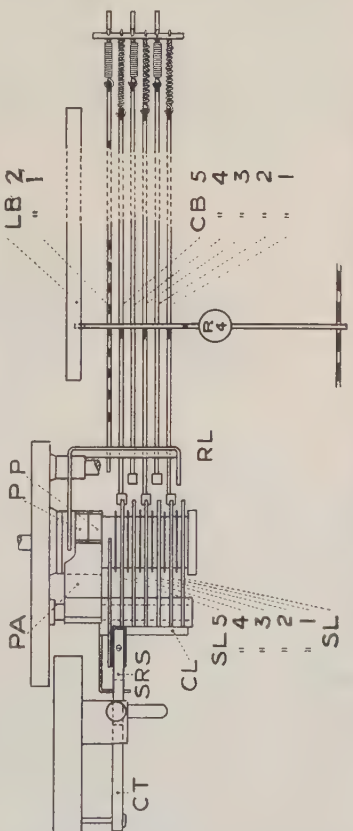

Fig. 386. Plan of Combination Bars and Selecting Levers

Code Impulses. If the first character impulse transmitted is spacing, as in the case of the combination for "R," *CB*1 will be held by the depressed keybar, and its extension will remain in position under *SL*1.

Consequently, as SL rises, and the slot in the next cam track passes beneath $SL1$, this selecting lever cannot drop, and therefore CT remains on contact screw S. The first character impulse transmitted is thus spacing as required.

Just as the slot in track 1 is about to pass from under $SL1$, the slot in the next track commences to move under $SL2$, and assuming that $CB2$ with its extension E, has moved to the right, $SL2$ is free to drop, so that

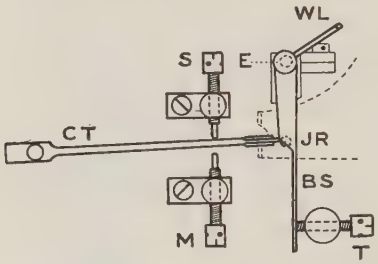

Fig. 387. Bias Spring and Jockey Roller

CT is returned to the marking contact. The second character impulse is thus marking. In this way the remaining impulses are sent out in definite sequence, either marking or spacing according to the position of the respective combination bars.

Stop Signal. As the slot in the last cam track $T5$ passes from under $SL5$ that in the first track, T, moves beneath SL, which accordingly drops and causes the contact tongue to be carried from S to M, or, if the latter is already on M, holds it there. The marking current thus transmitted until the cam sleeve comes to rest forms the stop signal.

Bias Spring and Jockey Roller. In order that the contact tongue shall be held firmly on either of the contact screws, and that the transit time between S and M shall be a minimum, a bias spring BS, having a jockey roller JR, is provided, as shown in Fig. 387.

The small wire lever *WL*, fitted to the eccentric pin *E*, forms the adjustment for raising or lowering the jockey roller, and the lower screw *T* determines the amount of tension exerted by *JR* on the contact tongue.

Send-receive Switch. Between the cam tracks and the pawls is a cam *B* (Fig. 388), which controls the movement of the blade *SRS*, one end of which normally rests on a contact screw *R*. *B* is so shaped that as

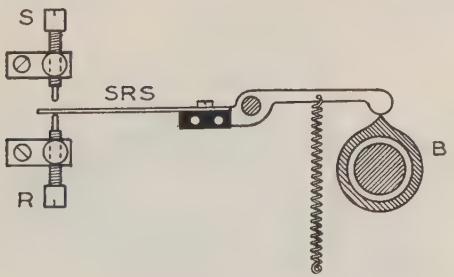

Fig. 388. Send-Receive Switch

the cam sleeve rotates, *SRS* moves from contact *R* to contact *S* immediately before the start signal commences and returns to contact *R* upon completion of the stop signal, just as the cam sleeve comes to rest. The arrangement is, in fact, an automatic "Send-receive" switch for use in simplex working.

Keyboard Locking Device. The locking device with which the keyboard is equipped is depicted in Fig. 389. This arrangement is required in order—

(1) To prevent a second keybar from being depressed when one is down; and

(2) To prevent a depressed keybar from rising during the transmission of a character combination.

The first object is attained by means of a locking-bar *LB*2, which is rigidly fixed to the locking-bar spindle *LBS* pivoted just above the trip-bar spindle

TBS. Attached to the end of *LBS* and *TBS* respectively are adjustable arms *P* and *Q* connected together by spring *S*4. During the depression of a keybar, and the consequent downward movement of the trip bar *TB*, the trip-bar spindle *TBS* turns, moving *Q* away from *P* which is pulled forward by spring *S*4 thus turning the locking-bar spindle *LBS*, and moving forward the locking-bar *LB*2 over the end of the depressed keybar and underneath the extremities of all the remaining

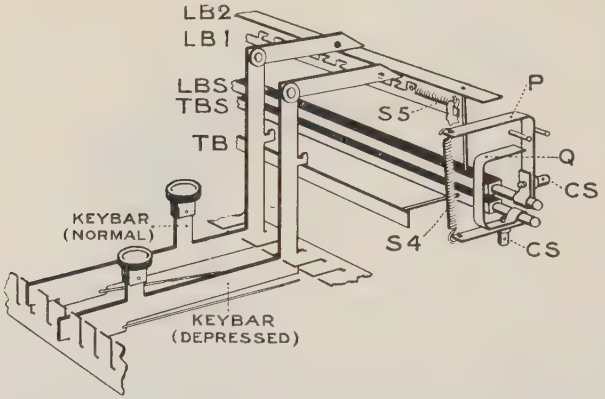

Fig. 389. Keyboard Locking Mechanism

keybars. This condition is shown in Fig. 389. *LB*2 is restored when the depressed keybar rises, owing to the end of arm *Q* striking the middle of *P* and pushing it back to its original position.

The second object of the locking device is attained by locking-bar *LB*1 situated immediately behind the fifth combination bar (see Fig. 386 also). *LB*1 has a number of hooked projections corresponding to the total number of keybars, each projection, as in the case of those on the combination bars, being just to the left of each associated keybar. *LB*1 is held against the tension of spring *S*5 by the reset lever *RL*, and is

released at the same time and in the same manner as the combination bars. As *LB*1 is pulled to the right by *S*5, a hooked projection immediately to the left of the depressed keybar enters a countersunk hole in its upper portion and holds the keybar down until the reset lever is restored by cam *C* when the transmitting cam sleeve comes to rest.

PRINTER UNIT

Creed Relay. Incoming signals are received on a Creed relay mounted on the base of the teleprinter,

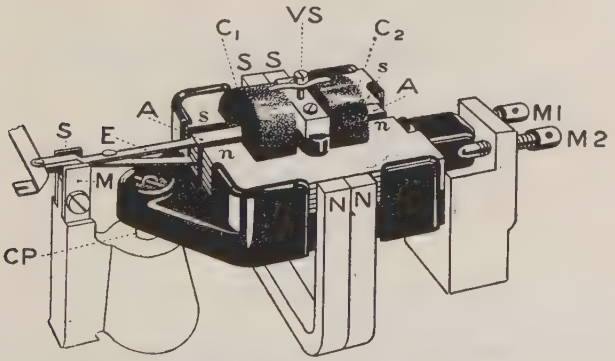

Fig. 390. Creed Relay

the main details being shown in Fig. 390. Two powerful horseshoe magnets *NS*, *NS*, induce polarity in two U-shaped laminated polepieces *nn*, *ss* as indicated. Mounted on a vertical spindle *VS* is a laminated soft iron armature *AA*, having an extension *E*, the end of which moves between the limiting stops *S* and *M*. On each side of the spindle *VS*, and surrounding the armature, are two coils C_1C_2 of 25 ohms resistance each.

As the armature moves in accordance with the direction of current through the coils, extension *E* passes from *M* to *S*, or vice versa.

The polepieces are supported on a brass casting,

one end of which is attached to the base of the machine by a conical pivot *CP* held down by a spiral spring. The other end of the casting rests on a support, and is shaped so as to lie between the screws *M*1, *M*2. By advancing one screw and withdrawing the other, the relay may be given a bias or can be set neutral, the latter being its normal adjustment.

Mechanical Relay. The electrical relay controls a mechanical relay by means of a link for the purpose of

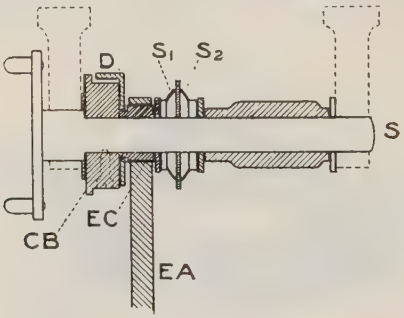

Fig. 391. Section through Mechanical Relay

operating the clutch trip mechanism in connection with the printer cam sleeve, and to position a striker blade.

Fig. 391 shows a section through the mechanical relay. *S* is a continuously rotating spindle coupled directly to the motor shaft. Mounted on *S* and revolving with it is a clutch boss *CB*, next to which is a detent piece *D*. The centre of *D* is shaped to fit over the end of an eccentric *EC*. *D* is frictionally held against the face of the revolving clutch boss owing to the pressure exerted by two springs S_1S_2, causing it and the eccentric to revolve with *CB*, unless it meets some obstruction. *D* is, however, normally, held stationary in one of two positions, either by projection *X* or *Y* on the detent frame *DF* (Fig. 392).

One end of an eccentric arm *EA* embraces the

eccentric *EC*, while the other end is coupled to a trip shaft *TS*. Attached to a small extension on the underside of *TS* is a trip link *TL*, which controls the movement of a pawl abutment *PA*. At the other end of *TS* is fitted a pair of split brackets *BB*, which support

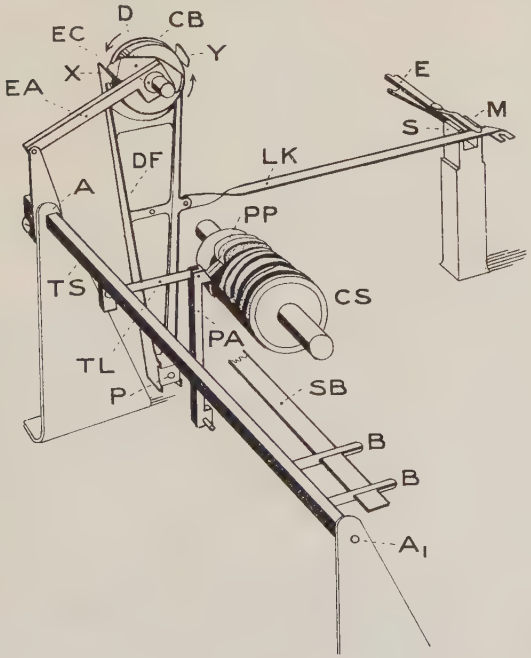

Fig. 392. Printer Clutch Trip Mechanism

one end of a striker blade *SB*, normally held in a horizontal position.

When the "start" signal is received on the Creed relay, the armature extension *E* passes from stop *M* to stop *S*, and the link *LK* moves *DF* on its pivot *P* to the left causing projection *X* to move from, and projection *Y* to move towards the edge of *CB*. The detent *D* previously held stationary by *X* is thus released and

revolves for half a revolution, when it is checked by the lower edge of projection Y. The eccentric EC turning at the same time, causes EA to move endwise slightly to the right, and to turn the trip shaft in its bearings A,A_1 so that the brackets BB holding the striker blade SB are tilted downward. The trip link TL in moving to the left, simultaneously causes the pawl abutment PA to be withdrawn from the pawls PP, which are pivoted on the printer cam sleeve CS, as in the case of the transmitter. One of the pawls is forced into engagement with the revolving ratchet, and CS commences to rotate.

When the stop signal is received, each of the movements just described is reversed. The pawl abutment moves back into position, the engaged pawl is withdrawn, and the cam sleeve comes to rest.

It should be noted that each time extension E moves in response to a signalling impulse the striker blade SB is either raised or lowered, and incidentally the pawl abutment is moved either towards, or away from the cam sleeve. The rotation of the latter, however, is not affected by the code impulses received between the start and stop signals. The cam sleeve is only brought to rest at the end of a single revolution since the pawls are not in position to be intercepted by the pawl abutment until the stop signal is received.

Combination Combs and Bell-crank Latches. Fig. 393 shows the arrangement of combination combs used in the process of selection and printing. The five combs $CC_{1\text{-}5}$ correspond to the five code units representing a character combination. They are mounted side by side on a drum, and each has a different arrangement of slots cut on its circumference. Rigidly fixed one to each of the five combs are five extensions $E_{1\text{-}5}$, which rest side by side on the bottom of a rack (not shown) when the combs are in their restored position. The extensions are moved up when marking signals are received, and the respective combs revolve slightly

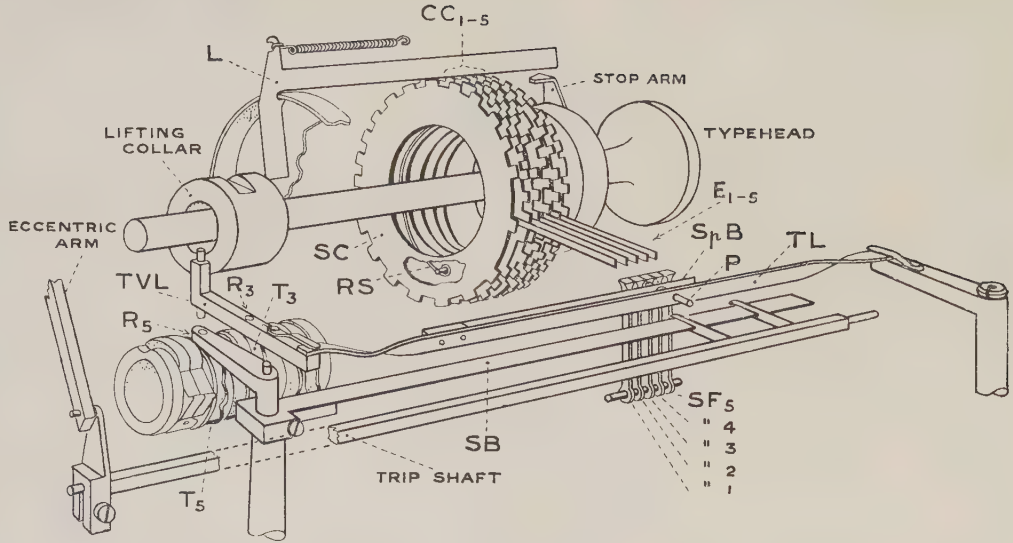

Fig. 393. Combination Combs and Finger Setting Mechanism

on the drum, against the tension of their restoring springs, one of which *RS* is indicated. Each comb, therefore, can be made to occupy one or other of two positions. When one or more extensions are raised two adjacent sets of slots become aligned across the five combs at a particular point, depending upon the character combination received.

Arranged in a circle around the combs are sixty spring-controlled bellcrank latches, one of which, *L*, with its associated spring, is shown. As one or more combs are moved, two of these latches will be opposite the grooves formed by the aligned slots, one latch corresponding to the letter selected and the other adjacent latch corresponding to the figure having the same code combination, the figure, and letter latches being arranged alternately around the combs.

Shift Comb. Mounted next to the combination comb CC_1 is a shift comb *SC* similar to the combination combs, but without an extension, and with slots and projections equally spaced around its circumference. This comb is made to occupy one or other of two positions by means of two of the sixty latches, one of which is termed the figure-shift latch and the other the letter-shift latch.

Inversion. Fig. 394 shows the shift comb, with the latches arranged around its circumference. When the figure-shift signal is received, the movement of the combination combs in this particular instance results in only one set of aligned slots, which occurs opposite the figure-shift latch *FSL*. As this latch is pulled by its spring into the groove so formed, it strikes a pivoted shift lever *SL*. The end of *SL* embraces a small roller surrounding a pin *P* which is fixed to the shift comb, so that when *FSL* is selected, it causes the shift lever to move on its pivot, and to turn the shift comb in the direction shown by the arrow. Consequently, all the projections are moved from under the figure latches to a position under the letter latches, and, therefore, when

the combination combs are set during the next selection, the set of five slots corresponding to the letter latch selected is closed, whilst opposite the figure latch having the same code combination a series of six slots become aligned. Thus only the figure latches can be operated.

By similar means the shift comb is moved back on receipt of the letter shift signal by the letter shift latch

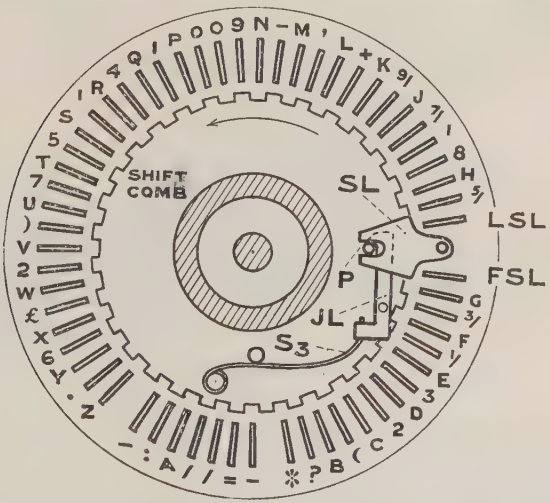

Fig. 394. Inversion Mechanism

LSL, so that in this case the letter latches only are free to move.

The jockey lever *JL*, under the control of spring S_3, exerts pressure on the pin *P* and associated roller, so that the shift comb, when moved, is held firmly in either of its two positions.

Typehead and Typehead Clutch (old pattern). Passing through the axis of the drum upon which the combs are mounted is a continuously rotating type carriage spindle *TCS* (Fig. 395), at one end of which is a typehead consisting of a type carriage *TC* and a number of

typebars arranged in the form of a circle, with letters and figures alternating. The typehead, when free to do so, is caused to revolve, by *TCS* acting through a friction clutch. *CB* is the clutch body which continuously rotates since it is fixed to the type carriage spindle. Friction is maintained between the inner surface of *CB* and two clutch shoes C_1, C_2 by spiral spring S_4 contained in a housing at the end of the type carriage.

Riveted to the type carriage is a stop arm *SA*. When a latch is pulled into an aligned set of slots in the

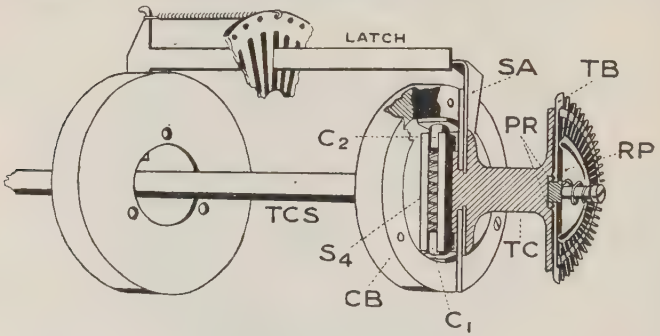

Fig. 395. Typehead and Typehead Clutch (Old Pattern)

combination combs, its end moves into the path of the rotating stop arm, arrests its motion and that of the typehead, and causes the clutch shoes to slip inside the clutch body. The type is arranged around the typehead, so that when the latter is thus checked, the required typebar is in its correct position for printing.

The actual sequence of the characters around the typehead is indicated in Fig. 394.

The end of each typebar at the centre of the typehead rests on a pivoting ring *PR*, while a retaining plate *RP* holds the typebars in a rack formed by narrow slits cut in the circular edge of the type carriage. Printing takes place when a hammer strikes the back

of the top typebar TB, the latter then being forced forward against the tension of the retaining plate.

Typehead and Typehead Clutch (new pattern). In addition to that described above, a new form of typehead and typehead clutch has been designed, the details being shown in Fig. 396.

The type carriage spindle, TCS_1, passes through the centre of the clutch body CB_1, and also through a hollow spindle which forms part of the type carriage.

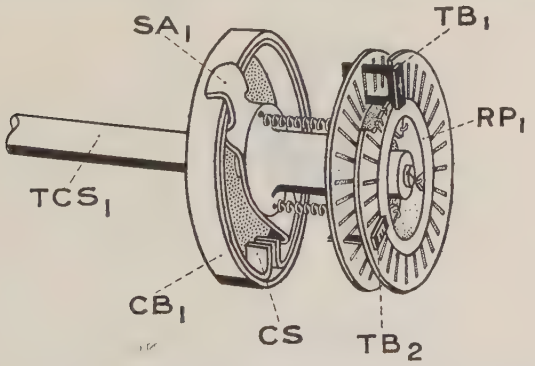

Fig. 396. Typehead and Typehead Clutch (New Pattern)

The latter is caused to revolve owing to the circular clutch spring CS. This spring exerts considerable pressure against the inner surface of CB_1 so that, as the latter revolves, the spring is carried round with it. The ends of the spring are bent inwards, one end engaging the stop arm SA_1, thus causing the typehead to revolve also. When SA_1 is arrested by a selected latch, CS slips inside the clutch body; the type carriage then remains stationary while TCS revolves inside the hollow spindle.

The typebars, of which two, TB_1 and TB_2, are shown, are not pivoted, but are held in two circular racks, and are kept in position by the edge of the

retaining plate RP_1. When the printing hammer strikes the back of a typebar, the latter is forced forward and also carries RP_1 forward against the tension of the retaining plate springs, two of which are shown. The typebars in both cases are inked by means of ink rollers IR held against the type faces by springs S_5S_6, as shown in Fig. 397.

Operations of Printer Cam Sleeve. The mechanical movements which bring about the setting of the com-

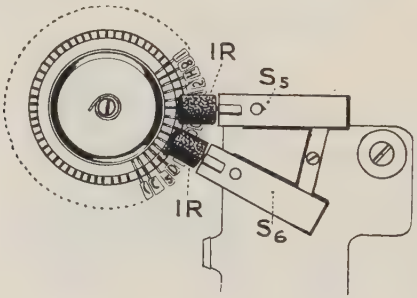

Fig. 397. Typehead Inking Device

bination combs and the printing of a character are controlled by the printer cam sleeve, which has five separate tracks. These are shown in development in Fig. 398. Each track operates an associated lever, which has a small roller pivoted on the underside. This roller revolves against the sides of the track as the cam sleeve turns beneath it. The relative positions of these rollers when the cam sleeve is at rest are as indicated. The tracks are labelled T_{1-5} and the rollers R_{1-5}. If the cam sleeve is regarded as revolving in the direction indicated by the arrow, the various mechanical operations about to be described can be correlated with little difficulty.

Two of the tracks, T_3 and T_5, are shown in Fig. 393. T_3 is cut in such a manner that, acting on roller R_3 as the cam sleeve revolves, it causes the traversing lever

TVL to move the traversing link TL endwise, first to the left, then to the right, and again to the left, during a single revolution of the cam sleeve. Resting loosely in a hole in TL is a striker pin P held in position by a spring blade SpB. Immediately in front of P are five selector fingers $SF_{1\text{-}5}$, each of which is capable of being moved towards the combination combs to a limited extent. The pin P, which is normally in front of SF_3, is first carried by TL to a position opposite SF_1, moved

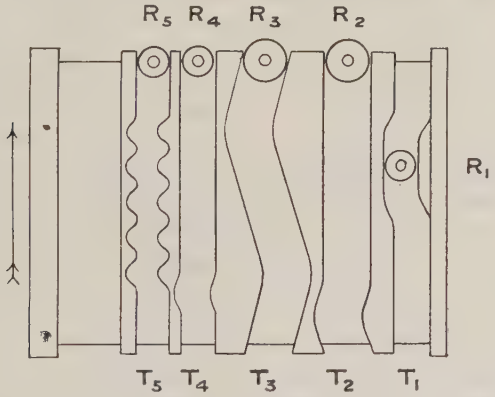

Fig. 398. Printer Cam Sleeve (Development)

back along the front of the selector fingers to SF_5, and then returned to SF_3.

Track 5 has five steps, each of which in turn operates the striker blade SB. As P is brought opposite SF_1, the first step acts on roller R_5 and causes the free end of SB to move towards the striker pin. If the first impulse following the start impulse is spacing, the trip shaft is turned by the mechanical relay, so that SB is tilted downwards, consequently as it moves forward it passes beneath P and returns, as R_5 passes out of the first step in T_5.

Step 2 causes SB to move forward again, just as P is brought in front of SF_2; and if the second impulse

is marking, the striker blade will be in its horizontal position (see page 650), so that in passing forward it will strike P, and will push it towards SF_2 against the pressure of the spring blade SpB. As a result, SF_2 will in turn be pushed under extension E_2 of the second combination comb. In this way the remaining selector fingers are pushed forward or not, according to the sign of the incoming signalling impulses, as the striker pin is moved by TL to SF_5.

Just as P commences to return from SF_5 to SF_3, a single step in T_4 (Fig. 399) acts on the type-hammer lever THL pivoted at A. A sharp movement endwise, first to the left and then to the right, is imparted to the type-hammer rod THR, which, acting on the type hammer TH pivoted at B, causes the type-hammer head THH to strike the back of a typebar and print the character selected during the preceding revolution of the cam sleeve. While the succeeding selection is being set up on the selecting fingers, as described above, one or more comb extensions must necessarily be in the raised position, since the previously selected latch, being in an aligned set of slots, will be holding the combs against the tension of their restoring springs.

The object of the next operation is to lift this latch together with the remaining latches, which, under the tension of their springs, lie on the edges of the combination combs. This is brought about by means of a step in track T_2 acting on the bell-crank lever BCL pivoted at C. When operated, BCL causes the lifting collar LC to slide along the type carriage spindle TCS and press against the extremities of all the latches, lifting them clear of the combs. The typehead, no longer held by a selected latch, immediately commences to revolve, while those combs moved during the preceding revolution of the cam sleeve are restored.

As these movements are completed, a long step in track T_1 (Fig. 400) acts upon roller R_1 and turns the triangular comb-setting lever CSL on its pivot F.

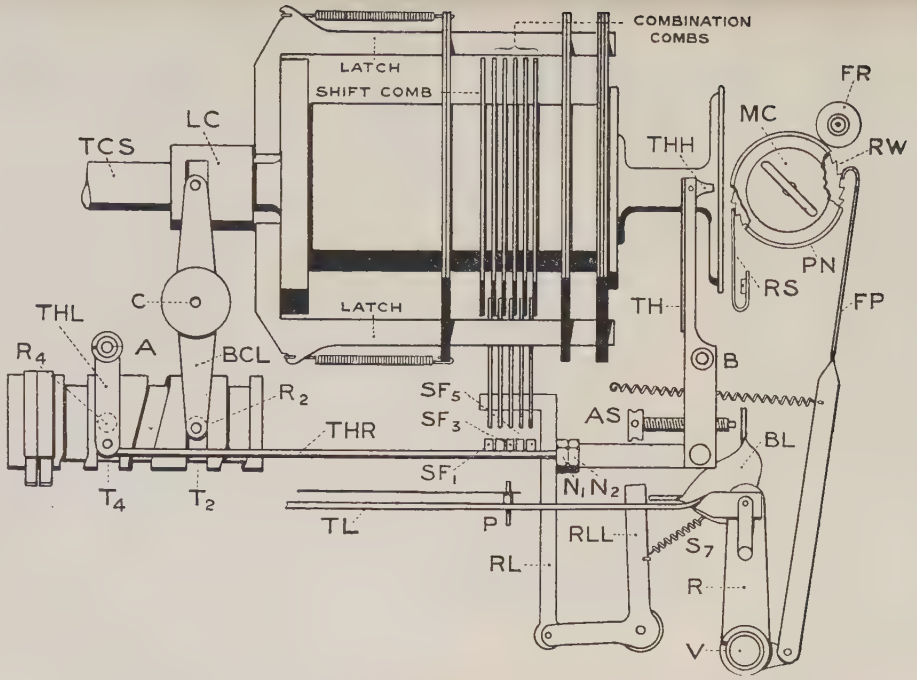

FIG. 399. PLAN OF COMBINATION HEAD AND FINGER RESETTING MECHANISM

The free end of *CSL* moves upwards and raises the selector fingers. Those fingers pushed forward lift the corresponding comb extensions, and the combs are set as the lifting collar previously mentioned is returned to its original position. Thus the particular latch selected drops into an aligned set of slots and stops the rotating typehead.

Roller R_1 reaches the centre of the step in T_1 as the cam sleeve comes to rest, and thus the selector fingers

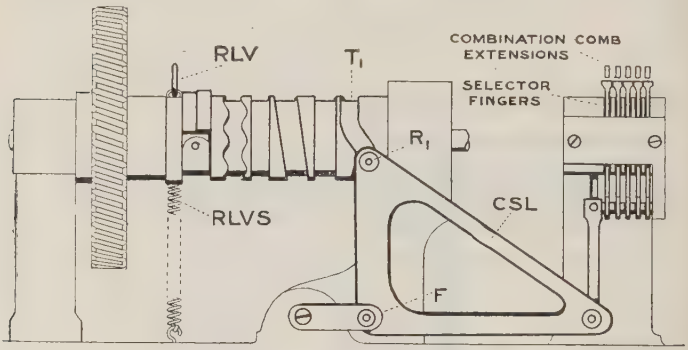

Fig. 400. Comb Setting Mechanism

remain in the raised position, with the striker pin opposite SF_3.

The end of the retaining lever *RLV* shown in the diagram, rides on a raised portion of the cam sleeve under the action of the retaining lever spring *RLVS*. As the cam sleeve comes to rest, the end of the lever drops into a depression and holds the cam sleeve steady.

During the first part of the succeeding revolution of the cam sleeve, R_1 rides out of the step in T_1, causing the selector fingers to be lowered. Immediately afterwards those fingers pushed forward are restored in readiness for the next selection.

As indicated in Fig. 399, one end of *TL* is loosely attached to lever *R*, and is capable of moving *R* to and

fro on the vertical spindle V. Pivoted on the underside of R, directly beneath the end of TL, is a bell-crank lever BL, one extremity of which is held against the resetting link lever RLL by spring S_7. As TL carries the striker pin from its position of rest opposite SF_3 to SF_1, lever R causes BL to push against RLL, turning the latter in an anti-clockwise direction. The resetting lever RL loosely attached to RLL is thereupon pulled against the selector fingers and moves them from underneath the combination comb extensions.

At this instant the other extremity of BL strikes an abutment screw AS and, as TL continues to move to the left, this screw forces BL to turn clear of RLL. The latter is thereupon restored by spring S_7, so moving back to its original position the resetting lever RL.

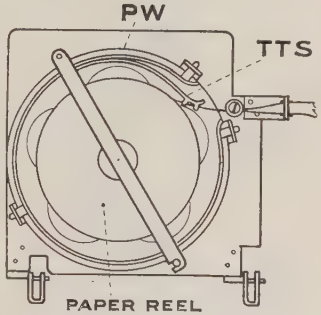

Fig. 401. Paper Wheel

As this operation is completed, TL commences to carry the striker pin back from SF_1 to SF_5. During this period BL is moved away from the abutment screw until eventually its extremity is again pulled by spring S_7 behind RLL.

Paper Feed. The reel of paper tape used for printing is fed from a paper wheel (Fig. 401) mounted at the back of the machine. The tape tensioning spring TTS acts as a brake and prevents the paper from running off too freely. The paper passes through three guides and around a platen PN shown in Fig. 399, which consists of a flat india-rubber ring stretched over a metal centre MC. Mounted on the same spindle as MC, and directly beneath it, is a ratchet wheel RW. This wheel is pulled round one tooth at a time by the feed-pawl FP, the other end of which is attached to

an extension on lever R. When TL moves to the left as the striker pin is carried from SF_3 to SF_1, the feed-pawl moves forward over a tooth of RW; then, as TL returns in the opposite direction, RW is pulled round and the paper tape, which is gripped between the platen and the feed roll FR, is fed forward one letter space. As RW is turned, the retention spring RS drops behind a tooth, thus preventing the ratchet, and therefore the platen, from moving backwards.

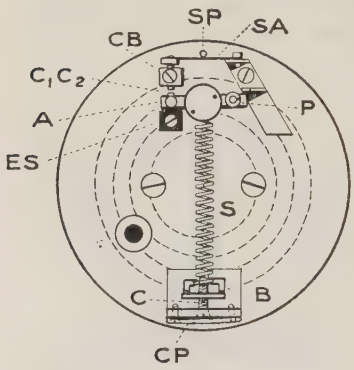

FIG. 402. THE GOVERNOR

During the time that the striker pin is being carried from SF_5 to SF_3, the movement of the feed pawl is again reversed, causing it to come to rest half-way along the next tooth of RW. It is during this period that the printing hammer strikes the back of a typebar and causes a character to be printed.

Governor. The $\frac{1}{12}$ h.p. motor used for driving the teleprinter is shunt wound, and its speed is controlled within narrow limits by a centrifugal type of governor, the details of which are shown in Fig. 402. S is a spiral spring fixed at one end to an anchor B, and at the other end to a movable weighted arm A pivoted at P. SA is a spring arm fixed at one end and having a small weight attached at the other end. There are two slip-rings behind the governor (indicated by dotted lines), arms A and SA being electrically connected to one, while a metal contact block CB is connected to the other. Connection to the governor is made by carbon brushes riding on these rings, as the governor revolves with the motor shaft.

When the motor is at rest, arm A (Fig. 402A) is held by spring S against the ebonite stop ES, so that contacts C_1C_2 are open; while SA rests against the contact block CB, in which position it short-circuits the governing resistance, thus ensuring that the motor shall start on its full field current.

When the motor is switched on, and the motor shaft with the governor commences to revolve, SA flies outwards against the limiting stop pin SP. The governing resistance thus brought into circuit, results in a rapid

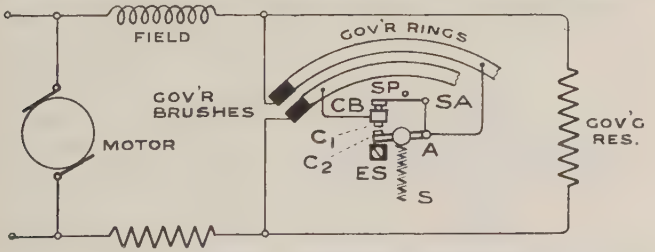

FIG. 402A. GOVERNOR CONNECTIONS (SCHEMATIC)

increase in speed causing the centrifugal force to overcome the tension of spring S, so allowing arm A to move outwards, until contacts C_1C_2 are closed. The governing resistance is then short-circuited, and the speed drops, whereupon contacts C_1C_2 again open. The rapid opening and closing of these contacts causes an average uniform speed to be maintained, depending upon the tension of spring S and weight on arm A. Arm SA does not again make contact with CB until the motor is switched off and the governor comes to rest.

ADJUSTMENTS

Pawl Abutment (Transmitter). The distance between the top of the pawls and the pawl abutment, when the latter is tripped, can be altered within small limits by the eccentric screw E (Fig. 383). If E is turned when the clamping screw is loosened, the position of the trip bell-crank lever TBL on the spindle K is altered, so that the step on the trip finger TF is

moved either nearer or further away from the lower end of the pawl abutment. The adjustment should be such that there is a clearance of not more than $\frac{1}{32}$ in. above the top of the pawls, when a key is depressed.

Locking Bar and Trip Bar. These should be adjusted as follows. The clamping screws *CS* (Fig. 389) should be loosened so that the arms *P* and *Q* are friction tight on the spindles. The trip bell-crank *TBC* and trip bar *TB* should then be raised as far as possible, and, whilst in this position, arm *Q* should be turned on the trip-bar spindle *TBS* until it presses arm *P* against the back stop pin ; *Q* should then be clamped.

The locking bar LB_2 should then be set so that it moves forward when a key is depressed and just clears the top of the depressed keybar, but passes beneath the extremities of all the remaining keybars. Arm *P* should then be clamped.

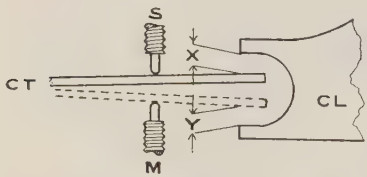

FIG. 403. ADJUSTMENT OF TRANSMITTING CONTACTS

Send-receive Switch. The lower contact screw *R* (Fig. 388) should be turned back until connection with blade *SRS* is broken, and then advanced until it just touches. A further half turn should then be given to ensure good contact. The top contact screw should then be adjusted until there is a contact gap of about ·010 in.

Transmitting Contacts. This adjustment is important and requires a certain amount of experience. The " Erase " keybar should first be depressed, and the motor shaft turned by hand until one of the selecting levers is half-way down while the next is half-way up, due to the action of the slots in the corresponding cam tracks. In this position the lower ends of both selecting levers should be touching the contact lever *CL* (Fig. 384), which will ensure that the latter is in its midway position.

The contact screws *S* and *M* should then be adjusted for the distance *x* (Fig. 404) when the contact tongue is against *S* to be the same as the distance *Y* when the tongue is on *M*. The contact gap should be approximately ·006 in.

Jockey Roller Tension. The position of the wire lever *WL* (Fig. 387) should be such that the jockey roller causes the contact tongue to bear with equal pressure when placed against either contact screw, while the contact lever is held in the midway position. The pressure can be ascertained with a sufficient

degree of accuracy if the contact tongue is pushed from one contact to the other by means of the finger. The tension exerted by the jockey roller should be the maximum with which it is possible for signals to be correctly transmitted. The tension can be varied by means of the adjusting screw *T*.

Striker Blade. This should be adjusted to cause the striker pin to strike the third selecting finger SF_3 (Fig. 393) slightly to the left and allow it to come central as the finger is pushed forward. There should be a clearance of ·005 in. between the lower edge of the blade and the bottom of the pin. This adjustment is made by means of the coupling at the end of the trip shaft, to which the eccentric arm is attached.

As the striker blade moves forward, each finger should be pushed to within $\frac{1}{32}$ in. of the comb rack. The tommy screw in the striker blade boss provides the adjustment for obtaining this distance.

Selector Fingers. These should lift the comb extensions to within about ·005 in. of the top of the comb rack.

Selector Finger Resetting Link. This should be adjusted so that it is released when the fingers just touch the back guide plate.

Latches. The lift of the latches when operated by the lifting collar *LC* (Fig. 393) should be approximately ·010 in. above the edges of the combs.

Relay. This should be set neutral, i.e. when the current through the coils is cut off, the armature extension should bear with equal force against either limiting stop (Fig. 390).

Printing Hammer. There should be a clearance between the backs of the type-bars and the face of the type-hammer head *THH* (Fig. 399) equal to about ·010 in. This adjustment is made by loosening the locknut N_1 and turning the nut N_2 so as to shorten or lengthen the type hammer rod *THR*.

Connections. Fig. 404 shows the internal connections of the Teleprinter 3A. These differ somewhat from those of the combined transmitter printer which Messrs. Creed & Co. have adopted as their standard machine.

Provision for rapid replacement of a motor by one wound for a different voltage is provided by connection strip No. 2, terminals 2, 3, 4, and 5 of which are connected to three resistances of 500, 1000, and 3000 ohms. Motors are supplied complete with the small connection strip shown, and the leads are taken to different

terminals depending upon the specified voltage of the particular motor. Thus when the connection strip for 110^{v} direct current motor is fitted to No. 2 strip, the governing resistance used is 1000$^{\omega}$, while the 3000$^{\omega}$ is left disconnected. In the case of motors operating on 200/220^{v} and 230/250^{v} direct current, the governing

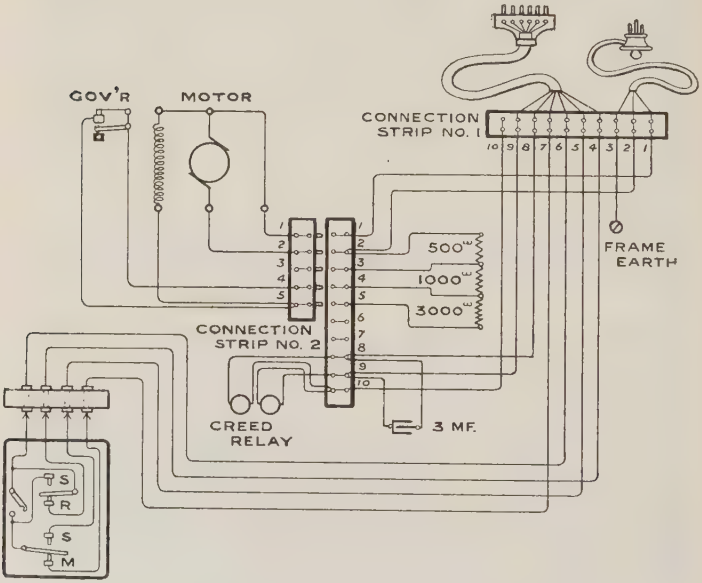

Fig. 404. Internal Connections of Teleprinter 3A

resistance is 3000$^{\omega}$, while the 1000$^{\omega}$ and 500$^{\omega}$ coils are added in series in the field circuit.

The 3 m.f. condenser shown is for the purpose of hastening the rise and fall of the current impulses operating the relay; the effect when this relay is used in the local circuit of a line relay is to eliminate sparking at the contacts of the latter (see figure 406).

The standard machine is equipped with a small automatic cut-out switch (described on pages 690–692),

which stops the motor from running when no signals are received after a period of approximately 30 sec., and starts it upon receipt of the first succeeding signal. The device, however, is not provided on machines in use by the British Post Office, since circuits upon which the teleprinter 3A is used are invariably duplexed,

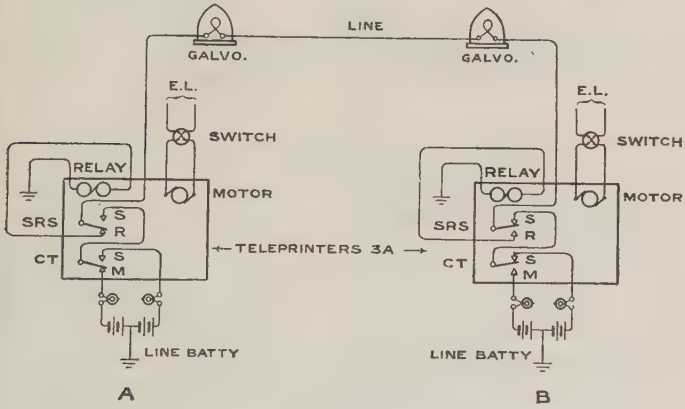

Fig. 405. D.C. Simplex Theoretical Connections

under which condition it is necessary for the motor to run continuously.

Simplex Connections. Fig. 405 shows the skeleton connections for a simplex circuit, and clearly indicates the purpose of the " Send-receive " switch. Station *B* is assumed to be transmitting a spacing impulse to Station *A*, and it will be seen that in the former case the battery is connected to the line by the switch, while in the latter case (where the transmitting cam sleeve is at rest) the battery is disconnected and the relay is joined to line.

Duplex Connections. Fig. 406 shows the skeleton connections for the standard duplex circuit in use by the British Post Office. The negative pole of the sending battery is connected to line for marking, both offices

being joined up alike, i.e. on the universal system. In order that duplex working can be satisfactorily accomplished, it is necessary that one side of the sending battery shall be connected to line when no signals are being transmitted. A strap is, therefore, provided which connects the contact tongue to the

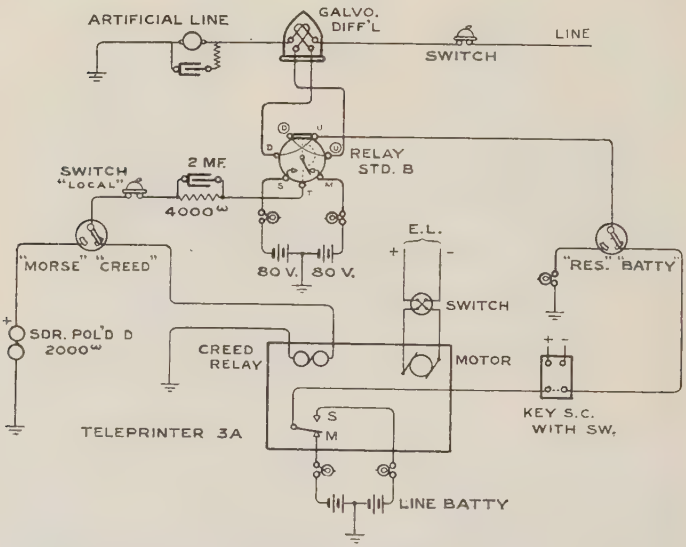

Fig. 406. Differential Duplex, Theoretical Connections

"Send-receive" switch when closed, thus short-circuiting the latter. This strap is clearly shown in Fig. 404.

The tumbler switch in the line enables the teleprinter to be tested independently of signals received from the distant office. When the line is disconnected, signals transmitted pass through the artificial line only, so operating the receiving relay and causing a record to be printed on the paper tape. This is usually spoken of as "testing in local."

An 80^{v} battery, together with a shunted condenser, enables a current of approximately 18 mA to be used for operating the Creed relay, instead of 20–30 mA normally required, and provides an equal margin of adjustment. The "local" tumbler switch is used for disconnecting the local circuit when the machine is not being operated.

Morse working can be resorted to if necessary, for which a two-way switch, polarized sounder, and a Morse key are provided. The line battery is connected both to the Teleprinter and Morse Key.

At offices where secondary cells are not installed, current for the local circuit is obtained from the electric light or power supply mains. The negative and positive leads are connected to the *S* and *M* terminals of the standard relay (Fig. 407), lamps being used for adjusting purposes and to reduce the potential difference between these terminals.

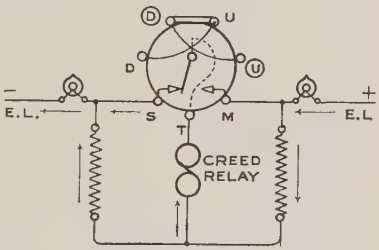

Fig. 407. Connections of Local Circuit with Direct Current Electric Light Supply

The resistance coils shown are Zenite resistances, designed to withstand the heat generated. The value of each coil for a 110^{v} supply is 2000 ohms ; while in the case of 220^{v}, 5000 ohms coils are used.

The arrows denote the path of the current when the tongue of the standard relay is on the spacing contact screw ; when the tongue moves to the marking screw, the current through the Creed relay is reversed.

The above arrangement cannot be adopted at offices where the electric light or power supply is alternating current. In such cases, one battery of large capacity Leclanché cells is used to furnish the line and local

currents. The voltage for the local circuit is 40 + 40—while a resistance of 1000$^{\omega}$ shunted by a 2 m.f. condenser is used in series with the Creed relay.

Two-line Simplex. This type of central battery circuit (Fig. 408) is used between large offices having a secondary cell installation and small offices, when the length of line involved is short. Facilities equivalent to a duplex circuit are obtained without the necessity for balancing apparatus. Two lines are used, the " head " office using No. 1 for transmission and the " out " office using No. 2.

The head office transmits direct to the distant Creed relay, through a shunted condenser with a line current of approximately 16mA.

Since there are no batteries at the " out " office, line 2 is worked single current, through a Post Office Standard Relay " B " at the head office, in order to provide double current for operating the polarized Creed relay. The resistance coil at the " out " office limits the line current to 20 mA. The negative pole of a 24^{v} earthed battery is permanently joined to line at the head office, while the Morse key and contact tongue of the teleprinter at the " out " office are arranged to complete the battery circuit when not transmitting. When the Morse key is depressed, or the contact tongue moved to the spacing contact, the line is disconnected, and the circuit through the standard relay is broken. The tongue of the latter passes to the spacing contact, and the Creed relay is operated in the usual manner. The standard relay " B " is given a spacing bias, to restore the tongue upon the cessation of a marking signal.

The 6-terminal 2-position switch provides a means for testing each machine " in local." When the switch is turned from " Normal " to " Local," the contact tongue of the teleprinter at the head office is connected direct to the local Creed relay, while *T* terminal of the Standard " B " relay is joined via line 1 to the relay at the " out " office. The latter, therefore,

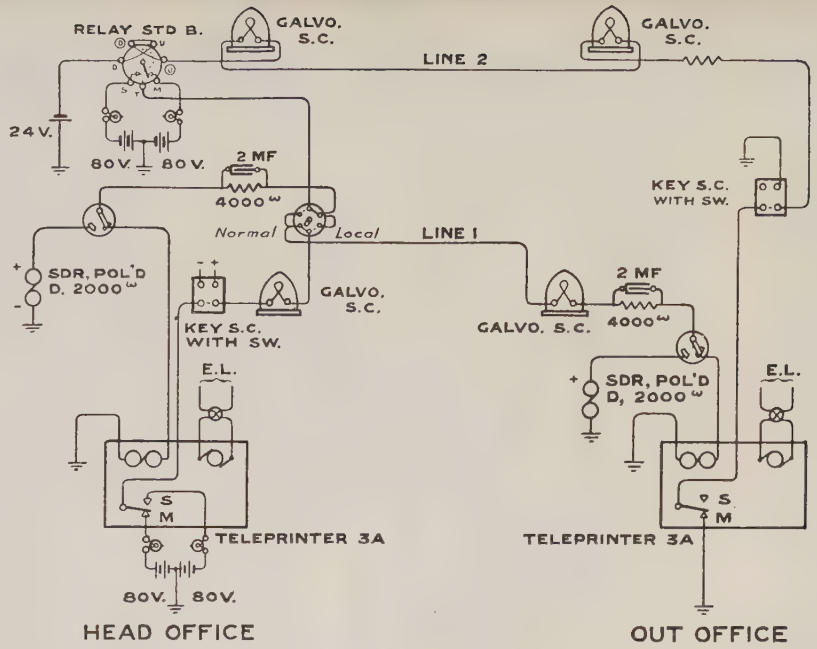

Fig. 408. Two Line Simplex Theoretical Connections

transmits signals on line 2 and receives them back on line 1.

Two-line Simplex (Siemens and Halske Voice Frequency). Fig. 409 shows the connections when a Teleprinter 3A is operated on a voice frequency channel. Outgoing signals are transmitted from a 40^{v} earthed

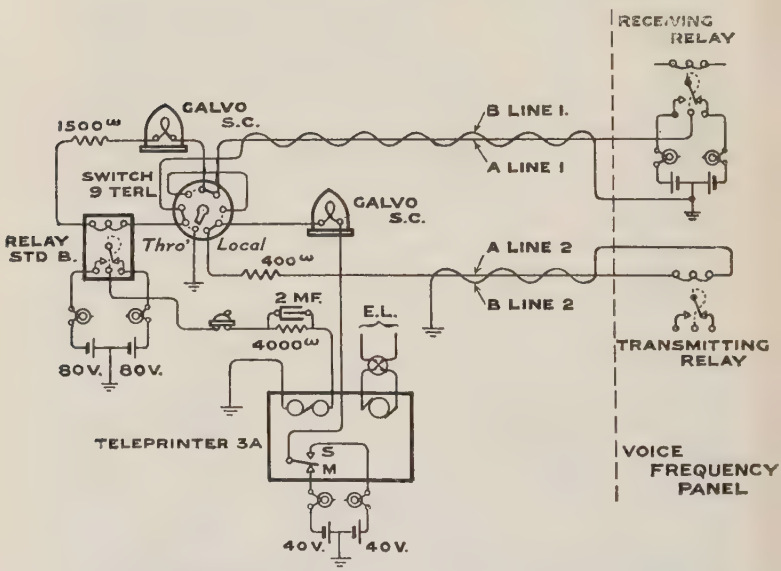

Fig. 409. Two Line Simplex (Siemens and Halske Voice Frequency) Theoretical Connections

battery via *A* line 2, through the coils of a transmitting relay on the voice frequency panel and to earth via *B* line 2. The 400$^{\omega}$ resistance coil limits the current to about 30 mA.

Received signals are repeated from a 24^{v} + and − battery connected to the *S* and *M* terminals of the voice frequency receiving relay via *A* line 1, through the coils of a Post Office standard relay " B," and to

earth via *B* line 1. The Creed relay is operated in the local circuit of the standard relay, which is of the rectangular base pattern. This type is being used on all teleprinter circuits in order to facilitate a rapid change of relay when required. The 1500$^{\omega}$ resistance coil in the receiving circuit limits the current to approximately 12 mA.

As telephone cables are used between the teleprinters and the voice frequency panels, the *B* line in each case acts as a screen for the *A* line, thus avoiding serious interference with telephone circuits in the same cable. For the same reason the voltages used are kept as low as possible, hence the use of a standard relay in the receiving circuit.

The 9-terminal, 2-position switch, when turned to "local," connects the contact tongue of the teleprinter through the Post Office standard relay and to earth, to provide a means for testing the teleprinter apparatus.

CREED KEYBOARD TRANSMITTER AND PRINTER (Teleprinter 5A and 4A)

These units, which are independently mounted and driven by separate motors, comprise the sending and receiving portion of one set of column printing apparatus.

The keyboard transmitter, in the case of the British Post Office, is used only for transmitting electrical impulses to the printer. By means of a punch block attachment, however, the transmitter can be used to perforate tape for automatic transmission.

The printer translates the received signals and prints them on a band of paper $8\frac{1}{2}$ in. wide, which is fed upwards from a roll as each line is completed. Hence the paper has only to be torn off, upon the termination of a message.

The mechanical principles and construction of both transmitter and printer are similar in many respects

to those of the combined tape printing machine manufactured by the same company. In order, therefore, to prevent duplication in description, frequent reference will be made to this machine, which is described in pages 632 to 673.

	1	2	3	4	5		1	2	3	4	5
A	:	●	●	○	○	○	Q	1	●	●	●	○	●
B	?	●	○	○	●	●	R	4	○	●	○	●	○
C	(	○	●	●	○	○	S	'	●	○	●	○	○
D	²	●	○	○	●	○	T	5	○	○	○	○	●
E	3	●	○	○	○	○	U	7	●	●	●	○	○
F	½	●	○	●	●	○	V	)	○	●	●	●	●
G	¾	○	●	○	●	●	W	2	●	●	○	○	●
H	⅝	○	○	●	○	●	X	£	●	○	●	●	●
I	8	○	●	●	○	○	Y	6	●	○	●	○	●
J	⅞	●	●	○	●	○	Z	.	●	○	○	○	●
K	⅜	●	●	●	●	○		/	○	●	○	○	●
L		○	●	○	○	●	CR		○	○	○	●	○
M	'	○	○	●	●	●	COLM		○	●	○	○	○
N	−	○	○	●	●	○	LTRS		○	○	●	○	○
O	9	○	○	○	●	●	FIGS		●	●	○	●	●
P	0	○	●	●	○	●	BLANK		○	○	○	○	○

Fig. 410. Signalling Code. Teleprinter 5A

The five-unit code employed is shown in Fig. 410. It is similar to that used for the combined machine, but has two special code combinations, one for feeding the paper upwards at the same time that the platen is moved backwards, and the other for moving the paper without returning the platen. The signals used are known respectively as the "Carriage Return" and "Column."

The machine in use by the Post Office can be operated up to a speed of 60 words per minute.

TRANSMITTER UNIT

Keyboard Transmitter. A view of the transmitter with message desk in position is given in Fig. 411. The mechanical operations are governed by a cam sleeve, which is caused to revolve through the medium of a single revolution clutch whenever a keybar is depressed. The clutch is similar in design to that described in detail on page 637.

Transmitter Clutch Trip Mechanism. As shown in Fig. 412, the two pawls *PP* pivoted on the cam sleeve are normally held out of engagement with a revolving

ratchet by the pawl abutment *PA*, the lower forked end of which rests on a ledge of the cam trip lever *CTL*. The depression of a keybar, one of which, *KB*, is shown, causes a trip bar *TB* to move downwards. *TB* is rigidly fixed to the spindle *SP*, which consequently turns in its bearings and raises the trip lever

Fig. 411. Keyboard Transmitter. Teleprinter 5A

TL. The latter lifts *CTL* moving the pawl abutment and releasing the pawls *PP*. One of the pawls, under the action of the circular pawl spring shown, engages one set of ratchet teeth cut on the spindle revolving inside the cam sleeve, causing the latter to revolve also. During the revolution an eccentric portion *E* on the cam sleeve moves *CTL* to the left against the tension of spring *S* until the pawl abutment is released. The latter is then restored by spring S_1 to its position for intercepting the pawls as the revolution is completed.

When *KB* is released, it is restored by spring S_2, *TB* is raised by the trip bar spring *TBS*, and *CTL* moves downwards to re-engage the pawl abutment.

The cam sleeve is prevented from moving backwards when the pawls strike the pawl abutment by a retaining lever *RL* which carries a roller *R* at one end. This roller rides on the eccentric portion of the cam sleeve

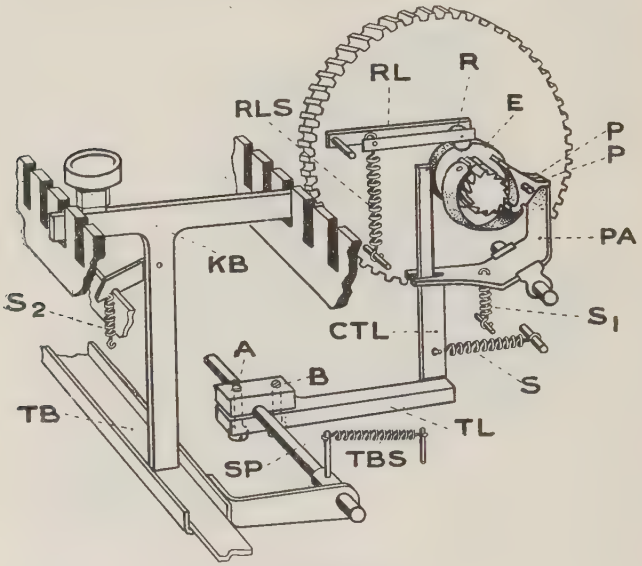

Fig. 412. Transmitter Clutch

and at the end of each revolution drops into a depression owing to the tension of the retaining lever spring *RLS* on the retaining lever.

Combination Bars and Selecting Levers. Side by side beneath the horizontal portion of the keybars are five combination bars, two of which, CB_1 and CB_2, are shown in Fig. 413. Each combination bar has a number of square projections, which in each case are aligned across the five bars slightly to the left of the

respective keys. A spring attached to each combination bar tends to pull it to the right, but is normally prevented from doing so by the reset lever *RSL*, which lies against the edge of a notch cut in the underside of each bar.

There are five selecting levers, under the control of the combination bars, two of which, SL_1 and SL_2, are shown, whilst in addition there is a sixth selecting lever

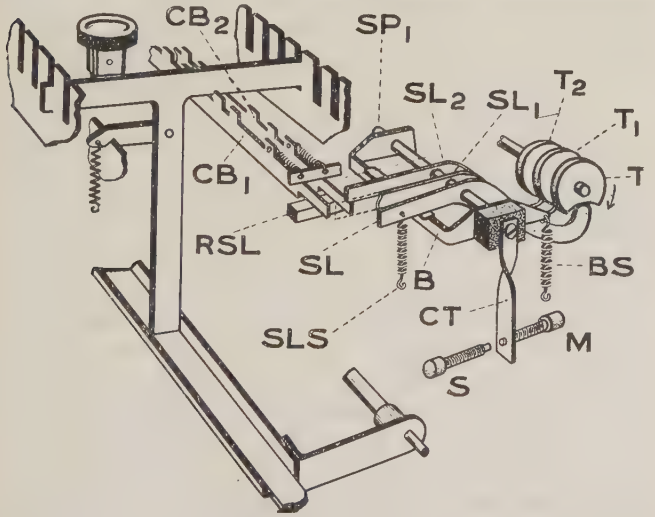

Fig. 413. Combination Bars, Selecting Levers, etc.

SL which governs the start signal. These levers are loosely mounted on the spindle SP_1, and their lower ends are caused to press against the underside of the corresponding cam tracks owing to the tension exerted by selecting lever springs, one of which, *SLS*, is shown.

Contact tongue. Rigidly fixed to SP_1 is a bracket *B* which carries an ebonite block and a contact tongue *CT*. The bracket spring *BS* normally exerts tension on the bracket, causing *CT* to lie against the contact screw *S* connected to the spacing pole of the line battery.

Operation of Combination Bars. The cam sleeve comprises two portions which contain in all eight tracks, six of them being associated with the six selecting levers. Each of the six tracks contains a slot staggered with respect to that in the adjacent track.

As soon as a keybar is depressed the reset lever RSL is operated by the cam sleeve, releasing the combination bars and allowing them to be moved by their springs. Those bars having projections immediately to the left of the depressed keybar are prevented from moving as the upper portion of the keybar lies in their path.

The remaining combination bars, however, are pulled towards the right of the machine, and their ends take up a position directly underneath the associated selecting levers. In Fig. 413, CB_2 is shown as having moved beneath the end of SL_2, while CB_1 is held by the depressed keybar.

Start Signal. As the slot in the first cam track T passes over the lower end of SL, spring SLS causes it to turn on spindle SP_1 and to bear on the bracket B. The latter, together with SP_1, revolves slightly, moving the contact tongue from contact screw S to contact screw M, thus sending to line a marking impulse constituting the start signal. This condition is indicated in Fig. 413.

Code Impulses. As the slot in T passes clear of SL, that in the next track T_1 moves over the end of SL_1, which is free to be operated since the associated combination bar is held by the depressed keybar. The contact tongue therefore remains on M, and a marking current is transmitted for the first code impulse.

The slot in T_2 next moves over the end of SL_2, which however is prevented from moving, since CB_2 lies beneath it. Consequently the bracket spring BS returns B to its original position, as SL_1 is restored. CT thus moves back to the spacing contact screw S so causing a spacing current to be transmitted for the second code impulse.

Spacing and marking signals are thus transmitted, in accordance with the positions taken up by the respective combination bars.

Stop Signal. During the interval of time between the transmission of the last code impulse and the instant that the cam sleeve comes to rest, CT lies against the spacing contact screw, sending out a current which forms the stop signal. The start and stop signals are thus reversed in sign to those used in connection with the Teleprinter 3A.

Send-receive Switch. Fitted on the end of the cam sleeve is a small ebonite piece E, shown in Fig. 414, which normally holds a spring contact C against a second contact A. As E revolves with the cam sleeve it allows C to rise, breaking contact with A and making with a third contact B; this occurs during each revolution of the cam sleeve. The arrangement forms an automatic "send-receive" switch for simplex working.

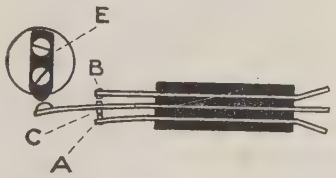

FIG. 414. SEND-RECEIVE SWITCH

Keyboard Locking Device. This arrangement, shown in Fig. 415, is required in order—

1. To prevent a second keybar from being depressed when one is down; and

2. To prevent a depressed keybar from rising during the transmission of a character combination.

The first object is attained by locking bar LB_1, which has a number of hooked projections corresponding to the total number of keybars. When a keybar is depressed, the trip bar TB in moving downwards carries with it the rod B, upon which is wound a spiral spring S_3. This spring, as it is carried downwards, becomes compressed until it moves an extension E attached to a locking-bar spindle LBS,

turning the latter in its bearings CC and causing a second extension E_1 to move the locking bar to the right. The hook on the locking bar to the left of the depressed keybar then engages with a hole in the horizontal portion of the latter, while the other hooks

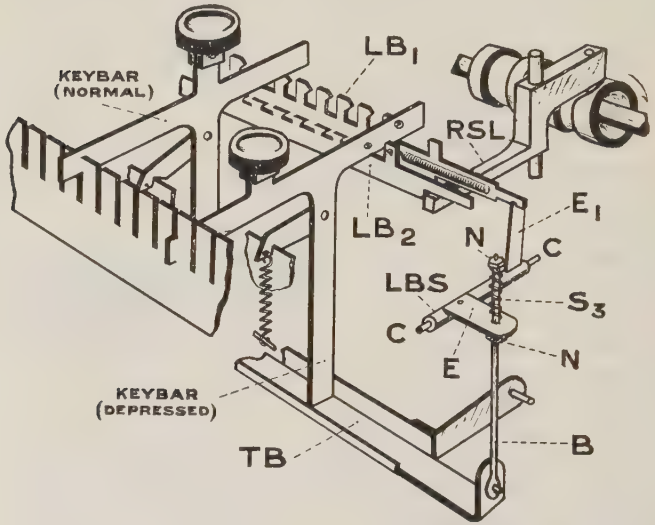

Fig. 415. Keyboard Locking Mechanism

take up a position beneath the remaining keybars, thus preventing them from being depressed.

The second locking bar LB_2 is similar to the first, and is controlled by the reset lever RSL. LB_2 is released at the same time as the combination bars, and one of its hooks engages with a second hole in the depressed keybar, holding it down until the cam sleeve has completed one revolution, when RSL is acted upon and the locking bar is restored.

Although the functions of both locking bars appear to be similar, it should be noted that whenever a keybar is released and the trip bar rises, the lower

adjusting nut N on the rod B lifts extension E and LB_1 is restored. This locking bar therefore only serves to prevent a second key from being depressed, while LB_2 is required in order to ensure that the keybar operated shall remain locked until the cam sleeve comes to rest.

Letter Counter. In the printer unit the paper upon which printing takes place passes over a platen, which moves along a spindle the distance of one letter space after each character is signalled, until a line of printing is complete. It is then returned to its original position as a result of transmitting the " Carriage Return " signal from the keyboard transmitter. As the transmitter is at one end of the circuit and the printer at the other end, it will be clear that some means is necessary for indicating the position of the platen on the spindle and warning the sending operator when to depress the " carriage return " key. A letter counter is therefore fitted at the side of the transmitter to indicate the number of letter spaces of a line that have been transmitted, and in conjunction with a lamp to indicate when the " Carriage Return " signal should be sent.

The mechanical details of the arrangement are shown in Fig. 416. The pawl lever PL which carries the pawl P is operated by rod R each time a key is depressed. R is controlled by cam track $T8$ and is caused to move first to the right then to the left, once during each revolution of the cam sleeve. As PL is operated, the pawl P, held in engagement with the toothed wheel TW by the pawl spring PS, feeds the wheel forward one tooth at a time while the retaining pawl RP prevents any backward movement. The number of teeth in TW corresponds to the maximum possible number of letter spaces contained in a line of printing, while, in addition, the front face of the wheel is drilled with a number of countersunk holes which are clearly shown.

Mounted on the spindle SP_2 which passes through

the centre of TW is an indicator I, one end of which is bent round to form a parallel extension terminating

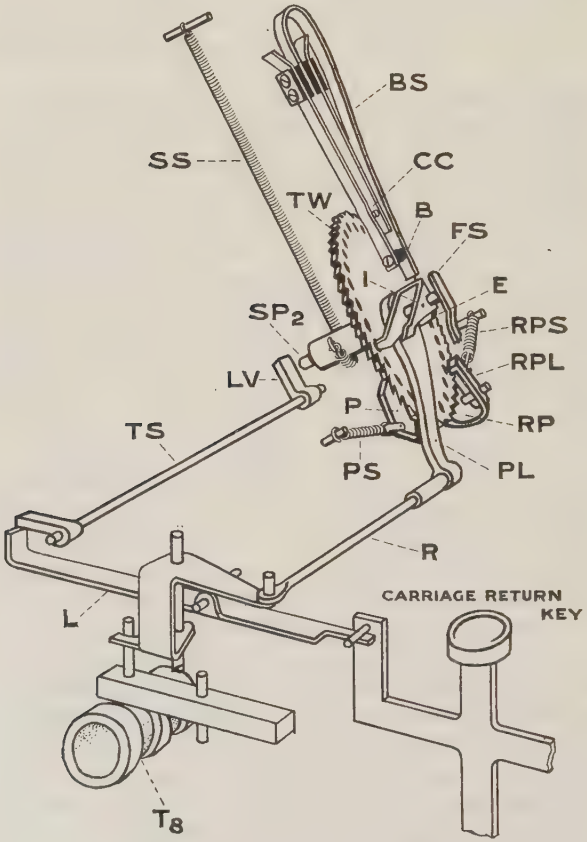

Fig. 416. Letter Counter

in a right-angled point. SP_2 is capable of moving endwise, and under the pressure of a flat spring FS is held towards the rear of the letter counter, allowing the point of the indicator to engage with one of the

countersunk holes. Thus, as the wheel is fed forward the indicator moves with it and passes over a scale which denotes the number of letter spaces transmitted.

There is a boss on the rear end of SP_2 to which is attached a spiral spring SS, which becomes wound around the boss as the indicator revolves.

Mounted above SP_2 are two contacts, CC, which are in the circuit of the associated lamp. They are normally held apart by the bent spring BS which presses against the insulating stop B fitted to the spring blade carrying the outer contact. When TW has nearly completed a revolution, an extended edge E of the indicator engages BS, and as TW continues to revolve, it carries the bent spring with it, allowing the outer contact to move forward until it touches the inner one. The circuit through the lamp, which is mounted on the left of the transmitter, is thereupon completed, lighting the lamp about ten letter spaces before the end of a line of printing is reached. This serves as a warning to the operator to depress the carriage return key which thereupon operates lever L, and causes a trip shaft TS to turn. The short lever LV carried by TS strikes the back of the letter counter spindle SP_2, forcing the latter forward against the pressure of FS, and disengages the indicator extension from the hole in TW.

The spindle is immediately rotated by the spiral spring SS wound around the boss, and the indicator is restored to its starting position against pawl lever PL.

Provision is made to avoid overwinding the spring SS, in case the operation of the carriage return key is neglected. In this event the indicator extension is carried by the toothed wheel TW against the retaining pawl lever RPL, so causing the withdrawal from TW of the retaining pawl RP. The wheel thus ceases to revolve and the lamp remains alight. When the indicator extension is finally disengaged and restored, RPL resumes its original position under the action of the retaining pawl spring RPS.

Governor. The details of the governor which controls the speed of the shunt-wound driving motor are shown in Fig. 417. The governor itself is mounted on the motor shaft and revolves with it. The weight W is carried on a flat spring FS to which is attached a bent metal piece carrying a contact C_1, normally resting against a second contact C_2. When the governor revolves, W flies outwards causing the spring FS to bend, and C_1 to pass from contact C_2 to another contact C_3. The two contacts C_2 and C_3 are electrically connected together and to a slip ring R_1, while C_1 is connected to a second slip ring R_2. In the first place the governor resistance connected between R_1 and R_2 is short-circuited so that the motor starts on its full field current. As C_1 leaves C_2 and the governing resistance is brought into circuit the speed increases until C_1 touches C_3. A drop in speed then occurs due to the resistance being short-circuited, and C_1 moves away from C_3. This action is repeated very rapidly, thus maintaining a uniform speed.

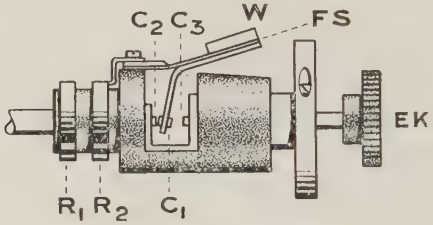

FIG. 417. GOVERNOR

Contact C_3 is mounted at the end of a screw enabling its position to be varied by turning the ebonite knob EK.

PRINTER UNIT

Printer. The printer, of which a general view is given in Fig. 418, is very similar in construction to that of the Teleprinter 3A, but differs in regard to the small tape platen which is replaced by an $8\frac{1}{2}$ in.

horizontal platen. The motor which drives the printer is mounted vertically beneath the printing mechanism.

The electrical relay upon which line signals are received and the mechanical relay which it controls are also very similar in construction to those of the tape machine. The detent frame of the mechanical relay, however, is replaced by two levers L_1 and L_2,

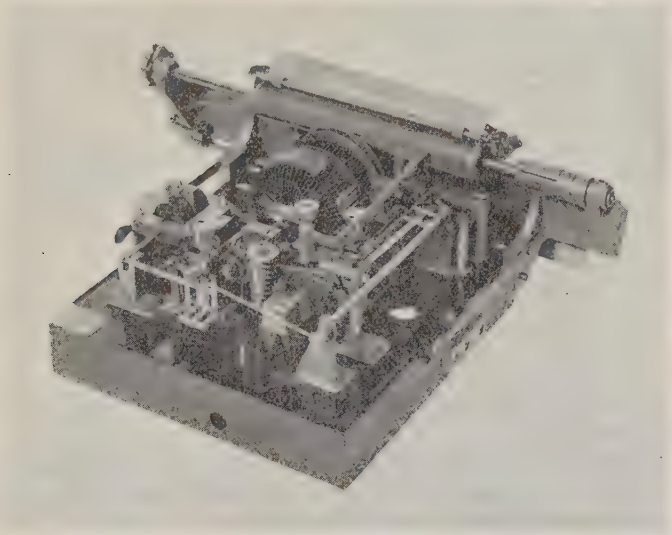

FIG. 418. COLUMN PRINTER. TELEPRINTER 4A

shown in Fig. 419, carrying projections X and Y for stopping the detent D in one of its two positions. The pinion spindle PS is geared to the motor drive, and therefore continually rotates. It carries the detent D frictionally held against the face of the clutch boss CB. Normally D rests against projection X, but when the start signal is received on the line relay the extension E of the armature moves from the limiting stop S to M, and in doing so moves the link LK. The latter in

turn moves L_1 and L_2, allowing the detent D and the eccentric EC to which it is fitted, to revolve through half a revolution. The eccentric moves the eccentric arm EA to the right, causing a trip shaft to turn slightly. As in the case of the combined tape machine, this results in the clutch mechanism of the printer cam

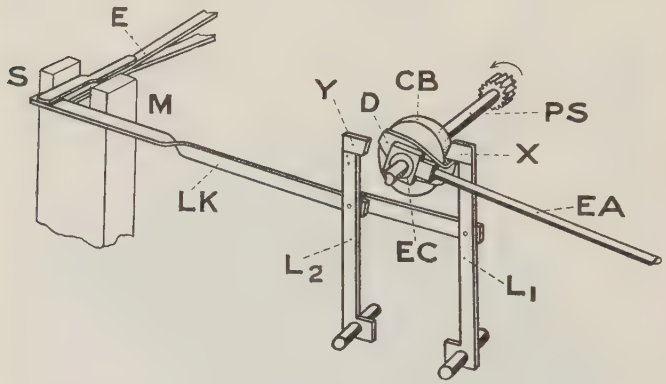

Fig. 419. Mechanical Relay

sleeve being tripped, so allowing the printer cam sleeve to revolve.

The operations of the cam sleeve by which mechanical selection and printing is effected are identical with those described on pages 656 to 661.

Paper Carriage. The mechanism which controls the movements of the paper platen is shown in Fig. 420. As previously mentioned, the platen PN moves along the spindle SP as each letter is printed and when it reaches the limit of its travel is returned to its initial position. As it returns, SP is caused to revolve with the platen, thus feeding the paper upwards in readiness for the next line of printing.

The movements of the traversing link T attached to lever R are identically the same as described on page 657. Lever R in this case is connected by means of a

universal joint to one end of a feed bar *FB*, which forms part of the paper carriage mechanism. Thus for every revolution of the printer cam sleeve, *FB*

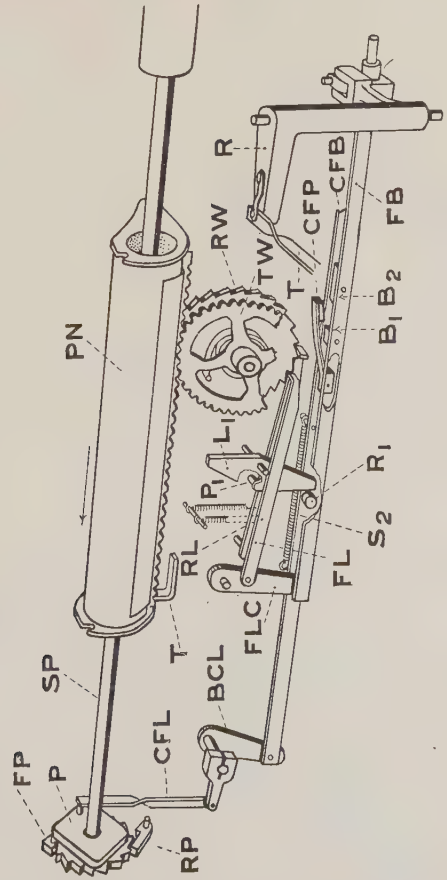

FIG. 420. PAPER CARRIAGE COLUMN FEED MECHANISM

is moved a slight distance to the left, then to the right and again to the left. During these movements the feed lever crank *FLC*, which supports one end of *FB* causes a feed lever *FL* to turn a ratchet wheel *RW*

one tooth at a time. Mounted on the same spindle as RW is a toothed wheel TW, which engages a rack beneath the platen PN, moving it along the spindle SP, one letter space for every revolution of the printer cam sleeve. RL is a retaining lever which prevents RW from moving back. Between RW and TW is a clock spring, one end of which is attached to the ratchet wheel and the other end attached to the spindle. As RW is fed forward, one end of the spring is carried with it and so becomes tightly wound around the spindle.

Column Feed. This is required for feeding the paper upwards off the roll without returning the platen to its starting position, as when addresses are being printed, and is effected by sending the " column " signal from the transmitter. This results in the column bellcrank latch moving up into the aligned set of combination comb slots, and allows a column lever to be depressed by spring S_1 (Fig. 421), so that it moves a column feed pawl CFP downwards. The latter is pivoted on the column feed bar CFB, which is adjacent and parallel to the feed bar FB.

As CFP (Fig. 420) moves downwards it enters the space between the blocks B_1, B_2 fitted to FB. Thus, as the latter moves to the right CFB moves also, causing a roller R_1, which it carries, to catch the lower end of the lever L_1. As the latter moves, a pin P_1 fitted to it depresses the retaining lever RL, so that the ratchet wheel, and consequently the platen, are not fed forward.

In addition to moving the lever L_1, CFB turns a bellcrank lever BCL, which causes the column feed lever CFL to move downwards, and to turn the plate P. Attached to P is a feed pawl FP, which moves with the plate and turns a ratchet on the end of SP, so causing the platen to revolve and to move the paper upwards. The retaining pawl RP holds the ratchet in position when CFB is restored by spring S_2 during the time that lever R moves FB to the left, as the printer cam sleeve comes to rest.

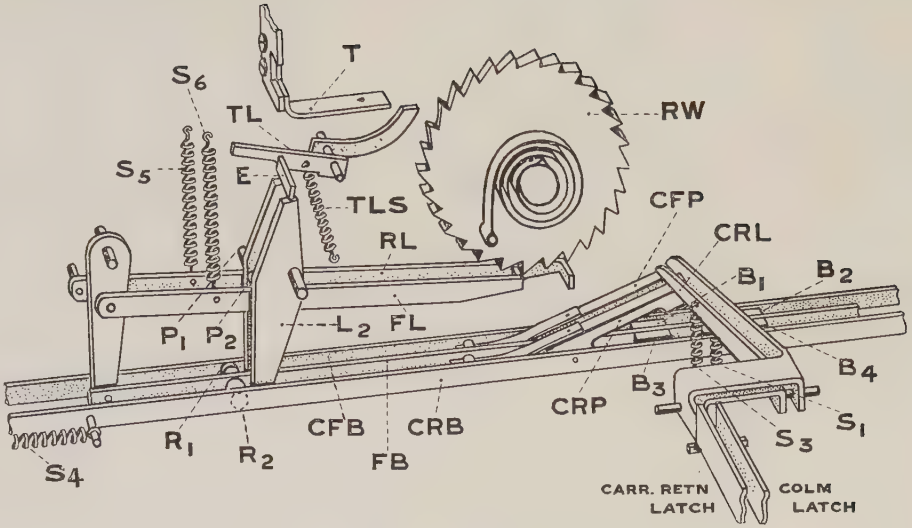

Fig. 421. Paper Carriage. Carriage Return Mechanism

Carriage Return. When a line of printing is completed the platen is returned to its starting position by the action of the " Carriage Return " signal. This signal results in the combination combs of the printer unit being moved so that a bell crank latch adjacent to the " Column " latch moves up into an aligned set of slots. As the end of the latch rises, it allows the carriage return lever *CRL* (Fig. 421) to be pulled downwards by spring S_3 and to act both on the column feed pawl *CFP* and on a similar carriage return pawl *CRP*. The latter is attached to the carriage return bar *CRB* and, by engaging the slot between the blocks B_3 and B_4, couples *CRB* to the feed bar *FB*. As *FB* moves to the right, both *CFB* and *CRB* move with it. While *CFB* holds the retaining lever *RL* out of engagement with *RW*, *CRB* acts on lever L_2 by means of roller R_2 so that pin P_2 causes the feed lever *FL* to disengage with *RW* also. The clock spring tightly wound on the ratchet wheel spindle thereupon unwinds and causes *RW* and *TW* to revolve and so restore the platen to its initial position.

In order that *RL* and *FL* shall be held clear of *RW* for a sufficient length of time to allow the platen to move back, a trip link *TL*, having an extension *E* is pulled downwards by the trip lever spring *TLS* when the levers L_1 and L_2 are acted upon by rollers R_1 and R_2. As the extension *E* is then in front of the upper ends of these levers, both *FL* and *RL* are held down as the platen moves back along the spindle. Just before the platen comes to rest a trigger *T* passing over the curved end of *TL* depresses it, thus raising extension *E* and allowing springs S_5 and S_6 to restore *RL* and *FL*. As these levers move upwards they lift the pins P_1 and P_2, thus restoring L_1 and L_2.

CRB is restored by spring S_4 as the cam sleeve comes to rest and the carriage return lever and the column lever are raised during the succeeding revolution.

Motor Starter. This device, shown in Fig. 422, is

arranged to stop the printer motor if no signals are received for a period of 30 seconds, and to re-start it on the arrival of the next starting signal.

The worm wheel F, drilled with two holes, is geared to the motor drive and revolves slowly. Passing through the centre bearing is a trip pin TP, which has

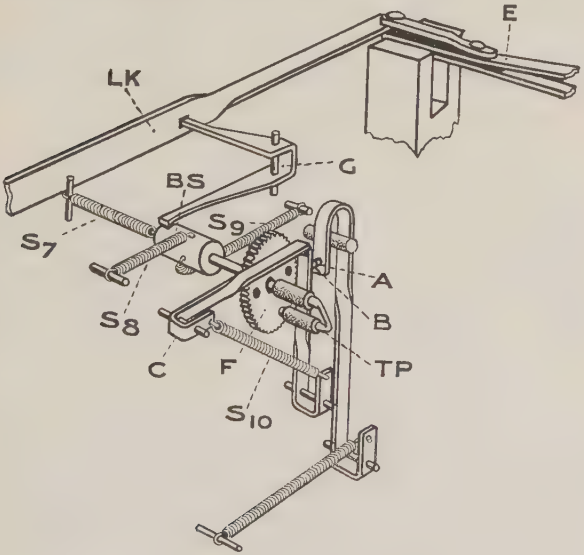

Fig. 422. Motor Starter

a boss at one end. Attached to the boss is a spring S_7, the tension of which holds the curved end of TP against the front surface of F. As the wheel turns, one of the holes comes opposite the end of the trip pin, allowing the latter to move into engagement, and to be carried round, while the springs S_8 and S_9 are wound around the boss.

When F revolves for one half a revolution, TP presses against the underside of lever C, lifting it and allowing spring S_{10} to withdraw contact B from contact

A. As these contacts form part of the circuit of the motor, it therefore ceases to run and F comes to rest.

The motor circuit is completed again by means of the lever G when the next start signal is received. One end of G rests in a hole of the link LK and the other end lies against the boss BS. As extension E moves the link to the left so as to release the detent of the mechanical relay, the link causes G to turn and push the boss against the tension of spring S_7. The trip pin is therefore pushed out of engagement with F,

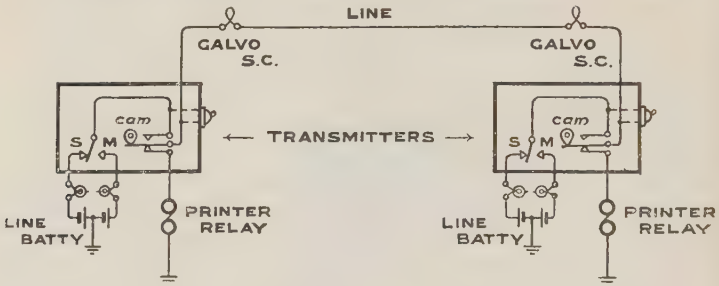

Fig. 423. D.C. Simplex Theoretical Connections

and the spiral springs S_8 and S_9 wound around the boss restore the trip pin to its original position.

Governor. The governor used in connection with the driving motor is similar to that described in connection with the transmitter.

Connections. Fig. 423 shows a simplex circuit and illustrates the operation of the send-receive switch. It will be seen that in the case of each transmitter the line is earthed through the relay of the printer unit. As soon as either transmitting cam sleeve commences to rotate the associated "send-receive switch" disconnects the printer relay and connects the sending battery. The tumbler switches shown are referred to in the next paragraph.

Duplex Connections. Fig. 424 shows the skeleton connections for the standard duplex circuit used by

the British Post Office. The remarks in connection with the standard duplex connections for the combined transmitter-printer, pages 667–669, apply equally to the column printing apparatus, except that a tumbler switch is provided on the transmitter in order to short-

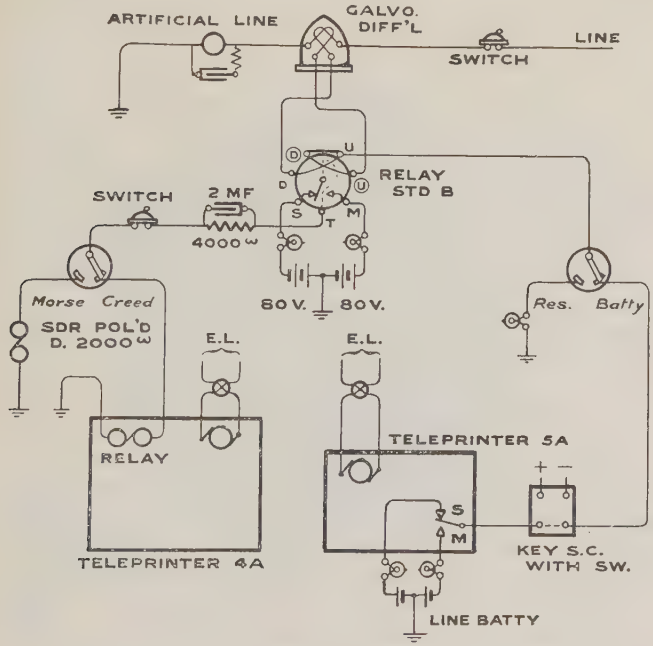

FIG. 424. D.C. DUPLEX THEORETICAL CONNECTIONS

circuit the send-receive switch at duplex, and that when testing " in local " the printed record occurs on a paper band instead of on a paper tape.

ADJUSTMENTS

Trip Lever (Transmitter). The trip lever *TL* (Fig. 412) should be adjusted for the pawl abutment *PA* to release the pawls *P* when the key lever is practically at the end of its stroke. This adjustment is made by tightening screw *A* and

loosening screw B, or vice versa, according to whether it is required to trip the pawls earlier or later.

Transmitting Cam Sleeve. The portion of the transmitting cam sleeve which controls the selecting levers is adjustable and should be set to allow the first selecting lever SL (Fig. 413) to drop within the first half revolution of the motor spindle.

Transmitting Contacts. The contact screws S and M (Fig. 413) should be opened out, and the screw S then turned back until it makes contact with CT. A further slight turn should be given to raise the bracket B just off its stop. The motor should then be turned by hand until the first selecting lever SL is operated and CT passes to screw M. This screw should then be turned until the distance between CT and S is ·015 in.

Locking Bar (LB_1). This is the only locking bar which is adjustable. The adjustment is effected by means of the nuts NN (Fig. 415). The top nut should be loosened and the position of the lower nut on the rod B arranged to allow the locking bar to move immediately a key is depressed. The top nut should then be tightened.

The main adjustments for the printer are given in connection with the combined transmitter printer on pages 663 and 664.

THE (TYPEWHEEL) TELETYPE

Teleprinter 1A

This machine is manufactured by the Morkrum-Klienschmidt Corporation of Chicago, and has been used extensively in America. Other administrations have also installed Teletypes, and a number of machines modified to suit requirements of the British Post Office, have during recent years been brought into use for commercial circuits in this country. As in the case of the Creed combined transmitter printer, the Teletype consists of a typewriter keyboard transmitter and a printing unit, both being mounted on the same base, and driven by a single motor. To suit special conditions, however, i.e. where messages have to be sent in one direction only, each unit driven by its own motor can be obtained separately. The machine used by the British Post Office and designated officially the Teleprinter 1A, has both units combined, but differs from

the American machine in that it has two space bars instead of one. This provision was made in the first instance in order to bring the keyboard into line with those of the numerous keyboard perforators which were already in use by the British administration.

Fig. 425 is a view of the Teleprinter 1A with the cover in position, and Fig. 426 with the cover removed. The

Fig. 425. Teleprinter 1A

machine is designed primarily for single-current working, using the five unit code in combinations of "current" and "no current" time intervals and is arranged to operate on the closed circuit principle, for which purpose the contacts governing the prefix or start signal are normally closed. The receiving mechanism is set in motion by breaking the closed circuit, and is brought to rest by again closing the circuit

The code, which is practically identical with that

used in connection with the Creed transmitter-printer, is given in Fig. 427.

The mechanism of the receiving unit is similar in many respects to that of the Baudot receiver. A single receiving electro-magnet is used, and printing is effected as in the Baudot system by bringing the paper tape

Fig. 426. Teleprinter 1A with Cover Removed

into contact with characters cut on the rim of an inked type wheel.

The machine can be operated at any speed up to 40 words per minute.

Keyboard Transmitter

The keyboard consists of a bank of lettered key levers, a set of notched selector bars, a contact mechanism, and a clutch, through the medium of which a contact operating cam shaft is driven.

Selector Bars. The selector bars, five in all, consist of flat steel strips, extending across the width of the keyboard, beneath the key levers. Counting from the rear of the machine, they are numbered 1, 2, 3, 4, and 5, corresponding with the units of the signalling code. They move in guides at each end and rest on rollers to facilitate endwise movement. The top edge of each bar has a number of triangular notches cut in it. When a key lever is depressed it acts on the notches immediately beneath it, moving the bars either to the right or to the left. The direction of movement of a selector bar depends upon whether the key lever strikes the right or left incline of the particular notch in that bar.

		1	2	3	4	5		1	2	3	4	5
A	:	●	●				Q	1	●	●	●		●
B	?	●			●	●	R	4		●		●	
C	(		●	●	●		S	'	●		●		
D	²	●			●		T	5					●
E	3	●					U	7	●	●	●		
F	½	●		●	●		V	)		●	●	●	●
G	¾		●		●	●	W	2	●	●			●
H	⅓			●		●	X	£	●		●	●	●
I	8		●	●			Y	6	●		●		●
J	⅞	●	●		●		Z	.	●				●
K	9/	●	●	●	●		+	+		●			
L			●			●	/	/	●	●	●	●	●
M	'			●	●	●	-	=				●	
N	–			●	●		FIGS		●	●		●	●
O	9				●	●	LTRS				●		
P	0		●	●		●	BLANK						

FIG. 427. SIGNALLING CODE: TELEPRINTER 1A

Locking Latches and Contact Levers. At the right-hand end of each selector bar is a slot which holds the lower end of a pivoted locking latch. To the left of the locking latches are six contact levers, each of which controls a pair of transmitting contacts. These contacts consist of two vertical springs, one of which presses against the hooked end of the associated contact lever. The latter when free to do so is moved on a spindle, and the corresponding contacts are closed. On the horizontal portion of each contact lever there is a hump which presses against the edge of a cam mounted on a shaft immediately above it, due to the pressure exerted by the associated contact spring. The

cam-shaft carries six contact cams, one being associated with each contact lever. The cams are set on the shaft, with the notches arranged consecutively, that is to say, as the shaft revolves, a notch in No. 1 cam passes over the hump of No. 1 contact lever, then a similar notch in No. 2 cam passes over the hump of No. 2 contact lever, and so on.

Referring to Fig. 428, if the key lever KL is depressed the selector bar SB will move to the left, and the upper end of the locking latch LL will move to the right,

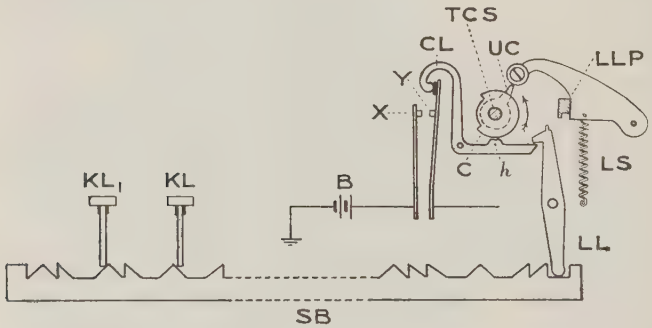

Fig. 428. Transmitting Contact Mechanism

releasing the contact lever CL. At the same time the transmitting cam-shaft TCS is caused to revolve—and as the notch in cam C passes over the hump h of the contact lever CL, the hump rises into the notch and the hooked portion of the contact lever moves to the left, allowing the transmitting contact Y to move forward and to touch X. The closing of these contacts completes the circuit of the battery B, either through the line or through a transmitting relay, and a current impulse is transmitted. As the cam-shaft continues to rotate, h rides out of the notch and the contact lever withdraws contact Y from contact X.

If, on the other hand, KL_1 is depressed, SB moves to the right, and the upper end of LL engages the contact

lever, thus preventing it from moving when the cam notch passes over the hump *h*. The circuit of the battery thus remains open during the time taken for the cam slot to pass over the hump of the contact lever. The whole five selector bars are positioned simultaneously, some to the right and the remainder to the left whenever a keylever is depressed, allowing during a single revolution of the cam-shaft "current" or "no current" impulses to be transmitted, as the cam notches pass successively over the humps of the six contact levers.

Start-stop Contacts. The "start" and "stop" impulses are controlled by the sixth contact lever and cam. When the cam-shaft is at rest, the notch in the sixth cam is directly above the hump on the sixth contact lever, and in consequence the sixth pair of transmitting contacts are closed, sending out a current from the battery *B*. As soon as the cam-shaft commences to rotate, this hump rides out of the notch, and the contacts are opened. This constitutes the start signal. Just before the cam-shaft completes its revolution, the hump rides into the notch again and the contacts close, sending a current impulse which forms the stop signal. The contacts remain closed until another key is depressed.

Locking Loop. In order to prevent any change in the setting of the selector bars during the transmission of a code combination such as might result from the premature depression of a key lever, a locking loop *LLP* is provided. This loop is held away from the locking latches by the unlocking cam *UC* when the cam-shaft is at rest. As soon as *TCS* commences to revolve, the locking loop is pulled downwards by the loop spring *LS* until it rests on the top of the five locking latches between the small vertical projections on the latches positioned to the right and left, as shown in Fig. 429. The selector bars and the locking latches are therefore locked until the cam-shaft completes a

single revolution, when *LLP* is raised so as to enable the next code combination to be formed.

Keyboard Clutch. The transmitting cam-shaft is driven by an intermediate shaft through the medium of a keyboard clutch, the details of which are shown in Fig. 430. The clutch-shaft *CS* has a driven clutch

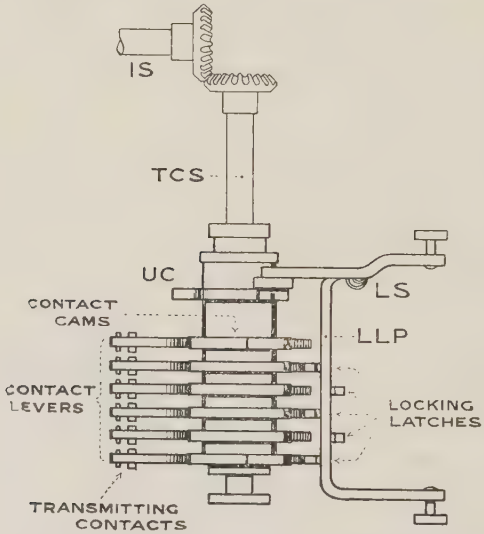

Fig. 429. Plan of Keyboard Locking Device

disc *DD* mounted on it. This shaft can be moved endwise in its bearings, and when thus moved, carries the driven clutch disc with it. Mounted on a sleeve surrounding *CS* is a driving clutch disc *DCD*, which is caused to revolve continuously by the motor acting through a worm gear. A clutch spring *S* surrounding the clutch shaft tends to move the latter to the left, but is normally prevented from doing so by a roller *R* mounted on a clutch lever *CL*. This lever is pivoted at *X*, and its lower end is held by a clutch lever latch

CLL, which is controlled by means of an adjustable link *LK* connected at one end to a universal bar *UB*.

When the key lever *KL* is depressed, it causes *UB* to turn on its pivots, this moves *LK* endwise to the left and tilts *CLL* downwards. *CL* is thereupon released and spring *S* immediately forces the clutch shaft, and consequently *CL*, to the left, allowing the clutch discs to engage and *CS* commences to revolve. When the key-lever is released it rises under the action of the

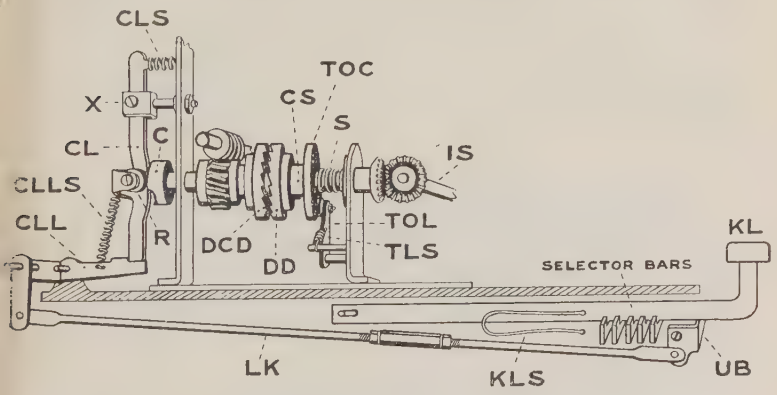

Fig. 430. Transmitter Clutch

key-lever spring *KLS*, and *CLL* is restored by the clutch-lever latch spring *CLLS*, which in turn causes the link *LK* and universal bar *UB* to resume their original positions. Just before the completion of a single revolution of the clutch shaft, a depression on cam *C*, mounted on one end of the shaft, passes in front of the roller *R*. The clutch lever spring *CLS*, which is in compression, moves the clutch lever *CL*, forcing the roller into the depression on this cam and the lower end of *CL* into engagement with *CLL*. Further rotation of *CS* forces the clutch shaft to the right thus disengaging the clutch discs. It should be noted that disengagement of the clutch only occurs if the

key-lever is released and CLL accordingly restored. If the key-lever is held down, roller R merely rides in and out of the depression on cam C, allowing the same character combination to be transmitted continuously until the keylever is eventually allowed to rise.

A throw-out cam TOC, having a V-shaped notch, ensures that CS and consequently the transmitting cam-shaft, shall always come to rest in the same position. Pressing against the edge of this cam is a roller, carried at the end of a throw-out lever TOL. When the clutch discs are disengaged, the throw-out lever, under the action of the throw-out lever spring TLS, causes the roller to enter the notch, holding the clutch shaft firmly in position.

Printer

Printer Clutch. The axle which carries the type-wheel of the printing unit is driven through the medium of a clutch controlled by the single receiving electro-magnet. The action of this clutch is very similar to that of the transmitting unit, the details being shown in Fig. 431.

When no signals are being received, the armature A of the receiving electro-magnet Em is attracted against the tension of the spring S_1 owing to the permanent current sent out from the transmitter. The clutch lever CL_1 is pivoted at P, and its upper end is loosely attached to a toggle T. A projection on the toggle normally presses against the edge of a notch in the toggle latch TL, since the printer clutch shaft CS_1, under the action of the clutch spring S_2 tends to force CL_1 to the left, and in consequence the toggle projection to the right. The toggle latch TL is held in the position shown by the toggle latch spring TLS, thus preventing any movement of CS_1 when the armature of the electro-magnet is not released. Directly beneath an adjusting screw in TL is a projection E on the electro-magnet armature. When the start signal de-energizes Em,

the armature is pulled upwards by spring S_1, causing projection E to lift TL. The clutch spring S_2 immediately forces the clutch shaft CS_1 to the left, and this in turn moves CL_1 on its pivot in the same direction, causing the toggle projection to move to the right underneath the curved portion of the raised toggle

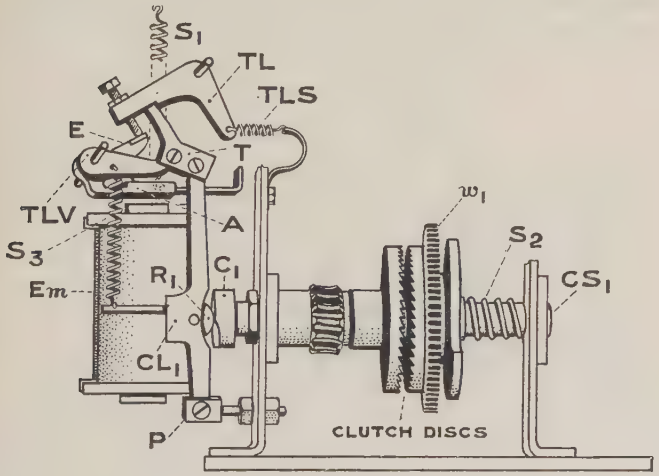

Fig. 431. Printer Clutch

latch TL. The movement is limited by the toggle lever TLV loosely attached to the toggle.

The movement of the clutch shaft brings about the engagement of the clutch discs, causing the shaft to revolve for one revolution when it is brought to rest in a similar manner to the keyboard clutch shaft. The stop signal energizes Em, moving the armature projection E downwards, just after roller R_1 mounted on CL_1 has moved into the depression on cam C_1. The roller is forced into the depression owing to the tension of spring S_3, which moves CL_1 to the right and at the same time pulls the toggle lever TLV downwards, causing the toggle projection to move back and to be

re-engaged by the toggle latch TL. As the clutch shaft continues to rotate, it is forced to the right, since any movement of the clutch lever is prevented by the engagement of the toggle. Consequently the clutch discs are forced apart and the clutch shaft comes to rest.

Shuttle Roller. The gear wheel w_1 on the clutch shaft engages with a gear wheel w_2 (Fig. 432) mounted on

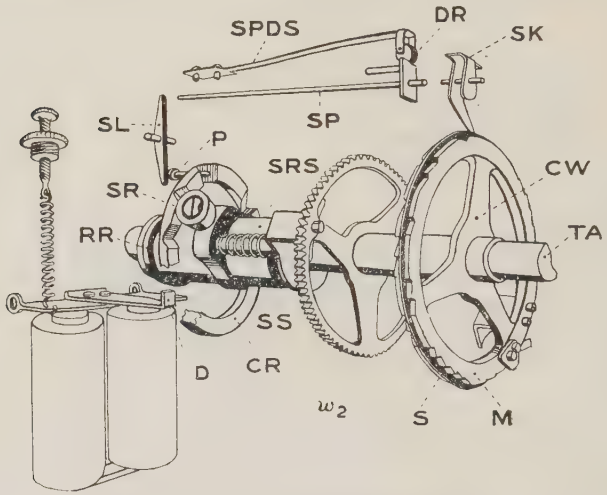

Fig. 432. Selecting Mechanism

the type wheel axle TA, causing it to revolve when the clutch is engaged. On the typewheel axle is a shuttle roller sleeve SRS which is capable of revolving with, and also moving along TA. The shuttle spring SS tends to force this sleeve to the left, causing a shuttle roller SR, which it carries, to press against a stationary cam ring CR surrounding the type wheel axle, and to roll on the surface of this ring as TA rotates. There are five indentations in the front surface of CR, each containing a hole through which a selector pin P projects. The head of the selector pin is close to the lower

end of a pivoted selector lever *SL*, the upper extremity of which lies against one end of an associated selector plunger *SP*. If the armature of the receiving electro-magnet is attracted just as *SR* reaches one of the cam ring indentations, *SRS* slides first to the left and then to the right as *SR* rolls in and out of the indentation.

During this movement *SR* forces the selector pin to the left, causing it to strike the selector lever, turning it on its pivot, and pushing forward the selector plunger *SP* in which position it is firmly held by the detent roller *DR* carried by the selector plunger detent spring *SPDS*.

If the electro-magnet armature is in the raised position when the shuttle roller is due to reach an indentation, an extension *D* of the armature will be in the path of a raised ring *RR* on the shuttle, and will prevent this sliding movement from taking place. The pin in the corresponding indentation will therefore not be acted upon by *SR*, which will continue on to the next high part of the cam ring. Thus, when the armature is attracted by the electro-magnet, a selector plunger is pushed forward, but when the armature is raised by the armature spring no selector plunger is moved. The five selector plungers, with their associated selector levers and selector pins, correspond to the five code units used. They thus translate into mechanical selection the signalling impulses energizing and de-energizing the electro-magnet.

Operation of Seekers. Mounted on the typewheel axle to the right of the gear-wheel *W2* is a combiner wheel *CW*, which consists of two notched plates *S* and *M* having a separator plate of slightly larger diameter between them. The toes of five seekers, one of which *SK* is shown, normally rest on the plate *S*. The seekers consist of bent metal pieces pivoted on shafts which are capable of moving endwise in their bearings, each shaft being directly in line with its corresponding selector plunger.

Fig. 433 is a plan of the selector plungers, seekers, and combiner wheel, showing the third and fifth selector plungers as having been pushed forward by the respective selector levers. *SC* is a selector cam having a setting face *SF* and a re-setting face *RF* fixed to the back of the combiner wheel. As the combiner revolves, the setting face of the cam passes behind the square

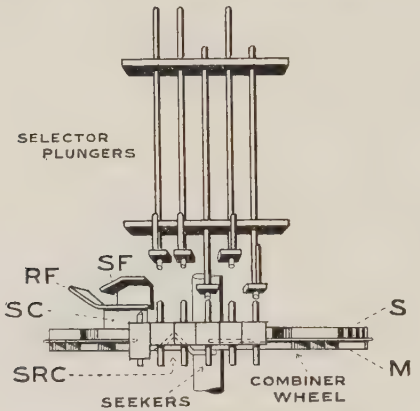

Fig. 433. Plan of Selector Plungers, Seekers, Combiner Wheel, etc.

plates of the forward selector plungers, each of which is, in turn, forced farther forward, and immediately afterwards restored as it is caught by the re-setting face of the cam. When the selector plungers move back they strike their associated selector levers, and these in turn restore the selector pins. As each selector plunger moves forward it strikes the axle of the corresponding seeker, forcing the toe of the latter from the combiner plate *S* to plate *M*, through a gap which occurs in the separator plate opposite the selector cam. The toes of the seekers thus moved, continue to ride on plate *M* until at the end of one revolution of the combiner wheel, they are restored by the seeker re-set cam *SRC*.

Print Arm Release. Fig. 434 is a front view of the combiner wheel, showing the third and fifth seekers as having been moved to plate *M*. The toes of all the seekers are caused to press firmly on the combiner plates by means of a trip lever *TL*, the upper portion of which tends to push the heads of all the seekers to the right, owing to the tension of the trip lever spring *TLS*.

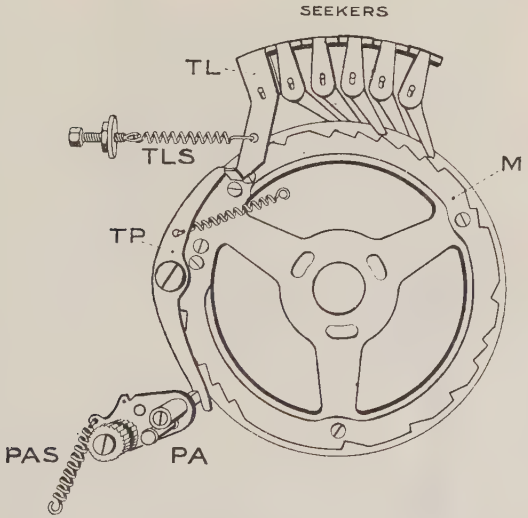

Fig. 434. Combiner Wheel and Print Arm

Resting against the lower end of *TL* is a pivoted trip pawl *TP*, which, as shown, normally engages a small square post at the back of the print arm *PA*.

As the combiner revolves, a particular set of notches, i.e. two in plate *M* and three in plate *S*, will pass under the seekers, the combination of notches being so arranged that they coincide exactly with the position of the seeker toes. At this instant, the pressure of the trip lever causes the heads of all the seekers to move sharply to the right, and their toes to drop into the

notches. The lower end of *TL* moves to the left, and striking the trip pawl brings about the release of the print arm. The latter, under the action of the print arm spring *PAS* moves anti-clockwise, its end engaging with one of a number of notches cut in a ratchet wheel *RW* mounted in front of the combiner, Fig. 435. The print arm is carried upwards, and is thrown clear

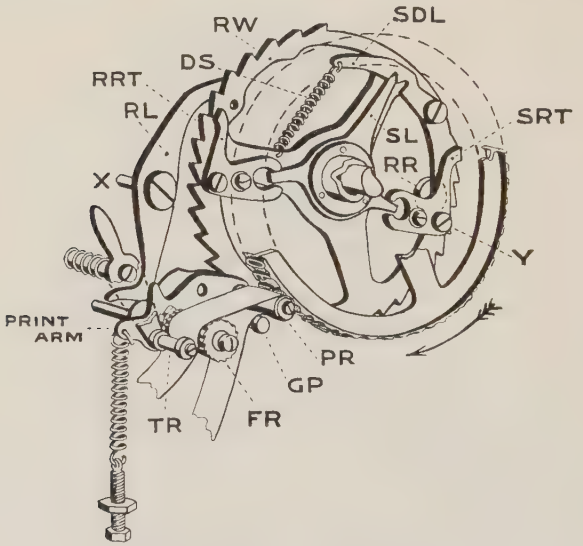

Fig. 435. Print Arm and Inversion Mechanism

as the ratchet wheel revolves. During this movement the rear portion of the print arm acts on a reset lever *RL*, loosely pivoted at *X*, and causes its upper end to move to the right behind the ratchet wheel *RW*. Attached to the back of the ratchet wheel is a reset roller *RR*. As *RW* continues to revolve, *RR* strikes the upper end of *RL* forcing it to the left, whilst its lower end bears on the print arm and causes it to move downwards to re-engage with the trip pawl.

Printing. The paper tape passes from a reel in a drawer beneath the base of the instrument, and is taken over a guide post *GP* on the print arm. It then passes round a print roll *PR*, and over a feed roll *FR*. The latter is knurled to enable a tension roller *TR* to grip the tape. As the print arm is released and is carried upwards, the paper is brought into contact with the type wheel mounted on the type wheel axle in close proximity to the ratchet wheel. The various characters used for printing are cut on the edge of the type wheel, and are inked by means of an ink roller. When the paper tape strikes a particular point the required letter is printed. Fitted at the rear of the feed roll is a small ratchet provided with a feed pawl and check pawl, hence, as the print arm is released the feed roll turns on the print arm spindle. When the print arm is restored the check pawl prevents the ratchet and therefore the feed roll from moving back, and the paper tape is thus fed forward. Part of the type wheel and the ratchet wheel is blank to enable the reset lever to restore the print arm while these portions of the two wheels are passing it. Thus, during this movement the print arm and the paper tape are not brought into contact with their respective wheels.

Inversion. Since only 32 code combinations are available, letters alternate with figures and other secondary characters on the type wheel, and a shift mechanism is provided which moves the typewheel to either of two positions, one in which letters are printed and one in which figures and other secondary characters are printed. The " figure shift " combination controls the movement of the type wheel from the letters to the figures position, and the " letter shift " combination moves the typewheel back.

The typewheel itself is not rigidly mounted on the typewheel axle, but is fixed to a loose hub. Attached to the rear part of this hub is a shift lever *SL*, one end of which fits into one or other of two notches in the

shift detent lever *SDL*. The latter presses against the shift lever owing to the tension of the detent spring *DS*. If *SL* is in the first notch, as shown, the type wheel is in position for printing letters, and if it is in the other notch it is in the figures position. The shift lever has two short extensions, one of which lies in a circular slot cut in the shift rocker toe *SRT*, while the other lies in a similar slot cut in the release rocker toe *RRT*. When the figure shift combination is received, selection is set up on the seekers in the usual way, releasing the print arm to be caught in the slot of the ratchet wheel, adjacent to the shift rocker toe. The latter is thereupon caused to turn slightly in an anti-clockwise direction on its pivot *Y*, moving the shift lever to the second notch in the shift detent. The movement of the shift lever causes the release rocker toe to turn, bringing it close to the edge of the ratchet wheel. Upon the receipt of the " figure shift " combination, the print arm acts in a similar manner on the release rocker toe, returning the shift lever to its original position. In the first case the type wheel is moved to the figures position, and in the second case it is moved back to the letters position.

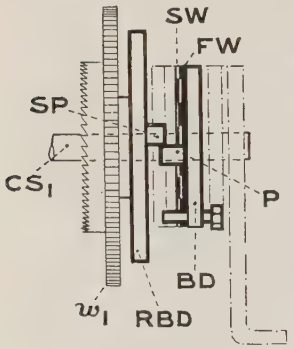

FIG. 436. CLUTCH BRAKE MECHANISM

Printer Clutch Brake. The purpose of the clutch brake mechanism is to stop the printer clutch shaft and therefore the type wheel axle at the same place every revolution, and to reduce the jar on the mechanism. It consists of a reset brake disc *RBD* (Fig. 436) which is mounted on the printer clutch shaft CS_1 next to the gear wheel w_1. This disc has a square stop pin

SP which normally rests on top of a similar stop pin *P* fitted to the brake disc *BD*, through the centre of which passes the clutch shaft. *BD* is held firmly by a fibre washer *FW* and a spring washer *SW*. When CS_1 moves to the left as the clutch discs engage, *SP* clears *P*, and the reset brake disc revolves with the driven clutch disc and gear wheel W_1. Just before the end of a single revolution, CS_1 is forced to the right, the clutch is disengaged and the stop pin *SP* strikes *P*. The brake disc *BD* turns slightly under the impact, and the momentum is absorbed by the spring washer. The brake disc is restored to its original position after each revolution of the clutch shaft by means of a resetting mechanism which moves the disc back to its zero position. One end of a reset lever *RL*, Fig. 437, engages a round pin projecting from *BD*, while the other end carries a roller *R*, which is held in position on the edge of *RBD* The disc *RBD* is cam-shaped, and as the clutch shaft revolves, its edge acts on the roller gradually moving it outwards, so that just before the clutch is again disengaged, the brake disc has turned slightly clockwise restoring *P* to its original position.

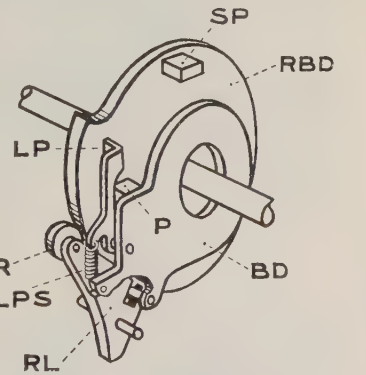

FIG. 437. CLUTCH BRAKE RESETTING MECHANISM

Provision is also made to prevent the type wheel moving backwards after it has been checked. This is brought about by a locking pawl *LP*, which is held in the position shown by the locking pawl spring *LPS*. As *RBD* rotates, the pin *SP* passes in front of the pawl *LP*, pushing it outwards and compressing the spring *LPS*. Immediately after *SP* has passed, *LP* moves

over the pin thus preventing it from rebounding as it strikes *P*.

Governor. To maintain the transmitter and receiver at the proper speed, the driving motor is controlled by a governor mounted on one end of the motor shaft. The details of the governor are shown in Fig. 438. *WA* is a weight arm fastened to a flat spring piece at one end, and carrying a contact at the other end. A retractive spring S, the tension of which can be varied by turning the adjusting wheel *W*, holds this contact against a second contact. When the governor revolves, the centrifugal force acting on the weight arm overcomes the tension of the spring, opening the contacts and bringing into the motor circuit the governing resistance previously short-circuited, thus reducing the motor speed, whereupon the contacts close. The opening and closing of these contacts takes place very rapidly, and maintains an average uniform speed. The adjusting wheel extends beyond the side surfaces of the governor, to enable the tension of spring *S* to be adjusted, without removing the governor cover.

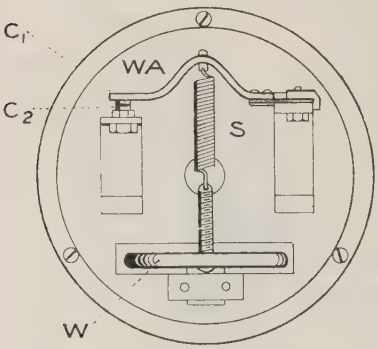

FIG. 438. GOVERNOR

THE TYPEBAR TELETYPE

TELEPRINTER 2A

This machine is a development of the typewheel teletype, the transmitting portion being the same, with the exception of the clutch. In this machine, one

FIG. 439. TELEPRINTER 2A WITH COVER

FIG. 440. TELEPRINTER 2A WITHOUT COVER

depression of a key will print the corresponding character once only, thus duplication of letters, which sometimes happens with the typewheel machine due to a key lever being held down too long, does not occur.

The printing portion of the machine is entirely different, except for the fact that a single receiving electro-magnet is used.

The teletype, which is shown in Figs. 439 and 440,

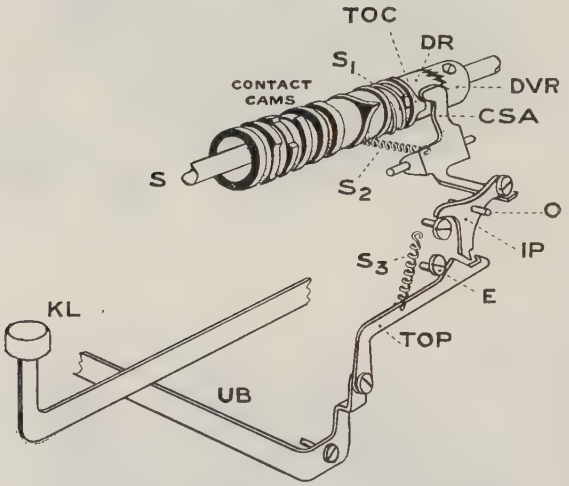

Fig. 441. Transmitter Clutch Mechanism

is that used by the British Post Office, and is officially designated Teleprinter 2A.

It has a maximum working speed of 60 words per minute, the code used being the same as that indicated on page 697, in connection with the earlier machine.

Transmitter Clutch Mechanism. This is shown in Fig. 441. The contact cams are mounted on a sleeve surrounding a shaft *S*, which is continuously rotated by the driving motor. Keyed to one end of the cam sleeve is a driven ratchet *DR*, which also surrounds the shaft *S*. The clutch spring S_1 tends to slide *DR* to

the right, but is normally prevented from doing so by means of a clutch stop-arm *CSA*, held by spring S_2, with its upper portion resting against a raised throw-out cam *TOC* mounted on *DR*. Immediately to the right of *DR* is a driving ratchet *DVR* fixed to and revolving with the clutch shaft.

When a key lever is depressed it brings about the engagement of the clutch, so causing the contact cams which is attached to a trip-off pawl *TOP*, and this in combination is transmitted. Thus when the key-lever *KL* moves downwards it depresses a universal bar *UB*, which is attached to a trip-off pawl *TOP*, and is moved to the left against the tension of spring S_3. The hooked end of *TOP* catches the lower end of an intermediate pawl *IP*, which turns on its pivot *O*, so that the right-hand extension bears on the lower end of the clutch stop arm *CSA*. The upper portion of *CSA* is thereupon moved away from the driven ratchet, which is at once forced into engagement with the driving ratchet thus causing the contact cams to rotate.

The top edge of *TOP* is provided with an incline which rests normally against the underside of an eccentric screw *E*. When the universal bar is operated, this incline causes the free end of *TOP* to move downwards in addition to moving to the left, with the result that the intermediate pawl is released immediately after it has been acted upon by the hooked end of the trip-off pawl. In consequence, the clutch stop-arm *CSA* is restored by its spring just after the contact cams commence to rotate, with its upper end again resting against the driven ratchet. Near the end of the revolution the sloping portion of the throw-out cam presses against the top of *CSA*, forcing the driven ratchet to the left, out of engagement with the driving ratchet, and bringing the cam sleeve to rest. Before the clutch can again be tripped, it is necessary for the key lever to be restored by its restoring spring, and for the trip-off pawl to move back to its original position.

Printer. The operations which bring about the mechanical selection and printing of a transmitted character result from the action of two clutches mounted on a continuously rotating main shaft. One clutch causes a receiving cam sleeve to revolve, and this positions five code bars. The second clutch controls the movement of a main bail, which in turn brings about the printing of the selected character.

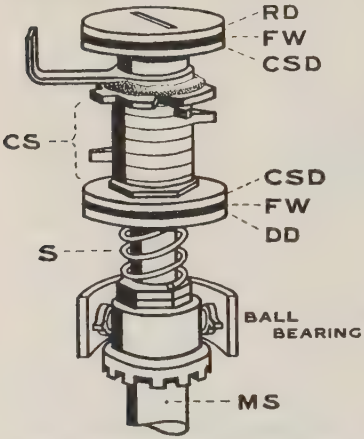

FIG. 442. RECEIVING CLUTCH

Receiving Clutch and Trip Mechanism. The friction clutch which governs the movement of the cam sleeve is shown in detail in Fig. 442. *MS* is the main shaft, which is geared direct with the motor drive. Keyed to each end of the cam sleeve *CS* are two cam sleeve discs *CSD*. A felt washer *FW* is placed between the top disc and *RD* and a second felt washer between the lower disc and a driving disc *DD*. Under the action of the clutch spring *S*, the cam sleeve is gripped between *DD* and *RD*, to such an extent that if free to do so it would revolve continuously.

The cam sleeve is, however, provided with a stop-arm *SA*, Fig. 443, which is normally held stationary by a stop-pawl *SP*, the upper end of which is engaged by a notch in the stop-pawl latch *SPL*. The start signal de-energizes the receiving electro-magnet *Em*, allowing the armature to be pulled away from the cores by the armature spring *AS*. The armature projection *AP* acts on the plunger *P*, pushing it to the left thereby

tilting an intermediate lever *IL*, which in turn strikes one end of *SPL*. The other end which is notched moves upwards, against the action of the stop pawl latch spring *SPLS* thus releasing *SP*.

The cam sleeve thereupon commences to rotate, the stop-arm *SA* pushing against and turning the stop-pawl *SP* on its spindle until it passes clear. *SP* is immediately afterwards restored by the stop pawl spring *SPS*.

When the stop signal is received, the armature of the receiving electro-magnet is attracted, and spring

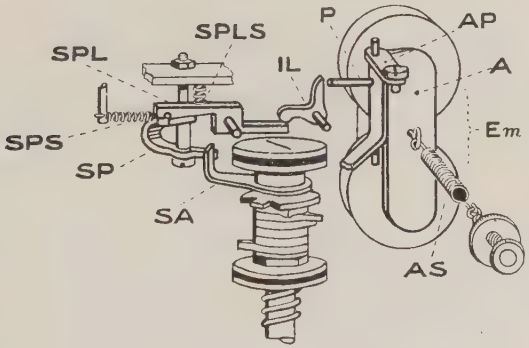

Fig. 443. Receiving Clutch Trip Mechanism

SPLS restores *SPL* to re-engage the stop-pawl *SP*, and to restore *IL* and *P*. The cam sleeve is thus brought to rest at the end of one revolution as the stop arm *SA* strikes *SP*.

It should be noted that the movements described above take place with every alteration in the position of the armature, but the cam sleeve is not brought to rest until the stop signal is received, as the stop arm is in some intermediate position of the path of its revolution.

Selection. The cam sleeve is provided with five selecting cams, which are timed to act consecutively on five selecting levers as each of the signalling

impulses constituting a character combination, are received. Each selecting lever carries a metal piece shaped somewhat like a sword, one end of which is caused to strike a T-lever, the latter thereupon sliding a code bar either in one direction or the other, depending upon the particular impulse received. One such sword *SD*, with the associated selecting lever *SL*

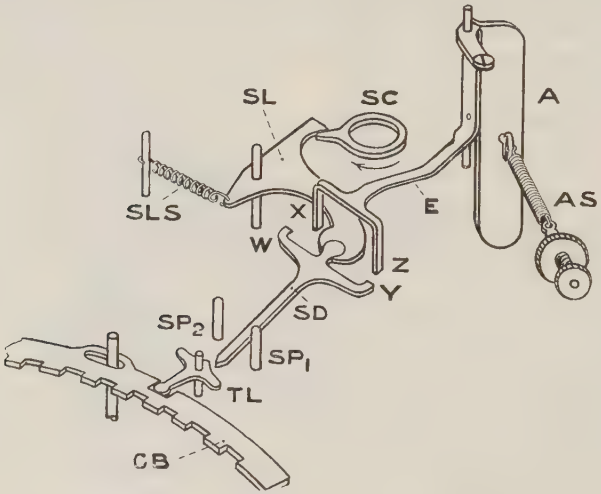

Fig. 444. Selecting Mechanism, First Position

and *T*-lever *TL* is shown in Fig. 444. As the selecting cam *SC* revolves, the projection shown engages one end of the selecting lever *SL*, turning the latter in an anticlockwise direction. During this movement the sword *SD*, which is loosely held by the other end of *SL*, is withdrawn from the T-lever. On the armature of the receiving electro-magnet, is an extension *E* having two projections *X* and *Z*. When the armature is attracted the projection *Z* on the extension *E* will lie in the path of a projection *Y* on the sword. Consequently, as *SL* continues to move anticlockwise under

the action of *SC* these two projections meet, resulting in the free end of the sword being moved from stop-pin SP_1 to a second stop-pin SP_2. This condition is shown in Fig. 445.

Immediately the cam projection clears *SL*, the latter is restored by the selecting lever spring *SLS*, and the sword is thrust sharply forward against the side of the

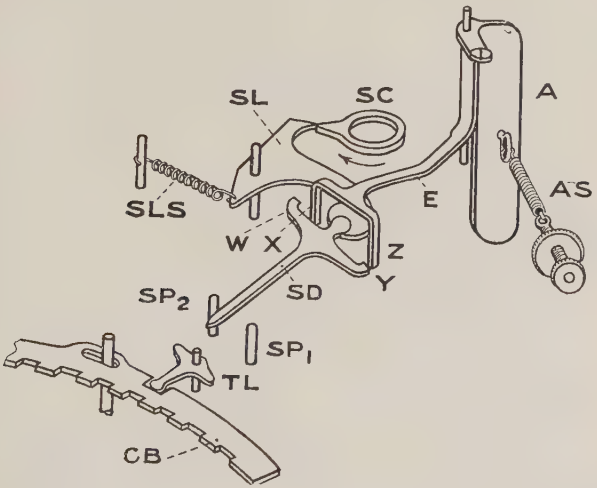

Fig. 445. Selecting Mechanism, Second Position

T-lever adjacent to SP_2. The T-lever is thus turned on its pivot and moves the associated code bar *CB* to the right.

When a " no current " impulse is received the electromagnet armature is pulled away from the cores by the armature spring *AS* causing the armature extension to move its projection *X* into the path of sword projection *W*. In this case, when the selecting lever is engaged by its associated cam, the sword is moved from SP_2 to SP_1, or if it is already against SP_1 it remains in that position. When the sword is thrust forward the T-lever causes the corresponding code

bar to move to the left, unless it is in that position due to the previous selection.

There are five code bars in all, one beneath the other, and each has a different arrangement of slots cut in its edge. When the bars have all been positioned as a result of an incoming character combination, an aligned set of slots occurs at one particular point.

In order that selection can be set up on the code bars correctly, a locking cam *LC* (Fig. 446) is provided. This cam is mounted on the cam sleeve and has five triangular notches, which act consecutively on a locking lever *LL*, causing its free end under the tension of the locking lever spring *LLS* to press, either on one side or the other, of a locking wedge *LW* fixed to the end of the armature extension *E*. The extension is thus held rigidly when a sword strikes one of its two projections.

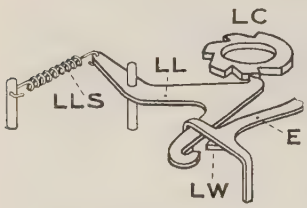

Fig. 446.
Armature Extension, Locking Device

Printing. Immediately the five code bars have been positioned, a trip cam *TC* on the cam sleeve (Fig. 447) trips a clutch stop-arm CSA_1. The lower end of this arm normally holds a driven ratchet DR_1 out of engagement with a driving ratchet DVR_1 fixed to the main shaft. As the lower end of CSA_1 is moved away from DR_1 against the tension of spring S_4, the main clutch spring *MCS* forces the driven ratchet upwards into engagement with the driving ratchet. The driven ratchet *DR* is keyed to a main bail cam *MBC*, which is thereupon caused to rotate. To the left of *MBC* is an operating arm *OA* carrying at its upper end a roller *R*, which presses against the edge of *MBC*, while at the lower end is fitted an adjusting screw *AS*. A main bail lever *MBL* on the same shaft as *OA* tends to move upwards under the tension of the main bail

lever spring *MBLS*, but its movement is normally prevented by the adjusting screw *AS*. The main bail cam is eccentric, hence as it revolves it allows *MBLS* to pull *MBL* upwards, thus tilting the operating arm *OA* and keeping roller *R* against the edge of the cam. The free end of *MBL* lies in a notch in a main plunger

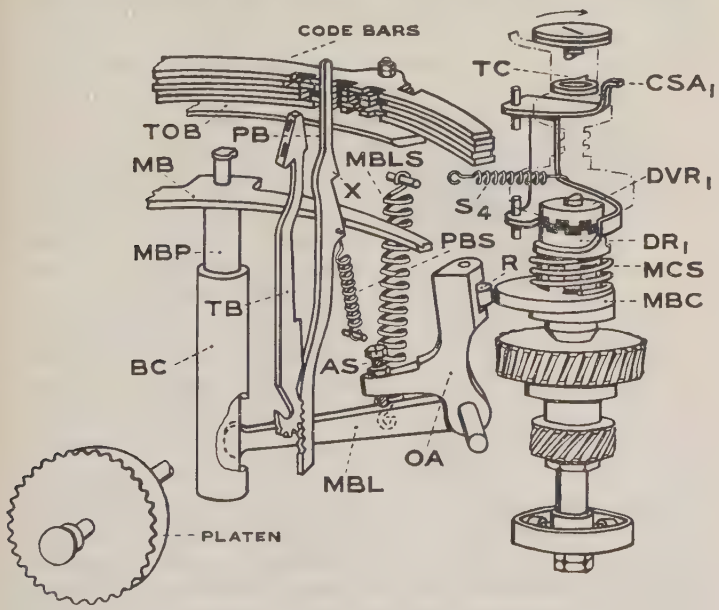

Fig. 447. Printing Mechanism

MBP, at the top of which is fixed a main bail *MB*. The movement of *MBL* therefore causes the plunger to slide vertically upwards in the cylindrical brass casing *BC*, and to carry with it the main bail. A number of pull bars, one of which, *PB*, is shown, normally rest against the front edge of *MB*, under the tension of springs, and as *MB* rises the pull bars move backwards until their upper ends rest against the code bars.

The pull bar immediately in front of the aligned set

of code bar slots, however, moves farther to the rear than the remainder, since its upper end is free to pass into the groove so formed. As a result, the edge of *MB* catches projection *X* and lifts the selected pull bar upwards, so that a rack at its lower end causes an associated typebar to move downwards and to print the required character. Immediately after printing, the upper edge of projection *X* reaches a trip-off bail *TOB*. and the pnll bar is forced forward until *X* disengages from the main bail. The pull bar spring *PBS* at once restores the pull bar, the rack causing the associated typebar to move back to its original position. As this occurs, the main bail cam completes one half of a revolution, and during the remaining half it acts on roller *R*, reversing the movement of *OA*. The adjusting screw *AS* pressing on *MBL* moves the latter, and consequently *MBP* and *MB* downwards. Just before *MB* comes to rest it presses against the inclined edge at the back of each pull bar, forcing all the pull bars forward, clear of the code bars, thus leaving them free to be reset during the following selection. The disengagement of the main clutch is brought about in a similar manner to that of the keyboard transmitting clutch by the clutch stop-arm forcing the driven ratchet downwards through the medium of a throw-out cam.

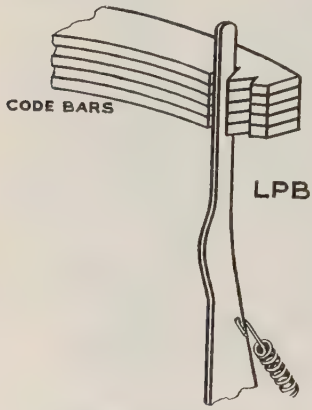

FIG. 448. CODE BAR LOCKING DEVICE

Code Bar Locking. A special locking device is provided to hold the code bars rigid whenever they are set as a result of an incoming character combination. The details of the arrangement are shown in

Fig. 448. Each code bar is provided at one end with two adjacent V-shaped slots. Thus, there is always a set of 5 slots in alignment behind the locking pull bar *LPB* irrespective of the positions taken up by the code bars. As the main bail rises, *LPB* is pulled into the groove but does not rise with the main bail, as it has no projection at the back. The code bars are thus

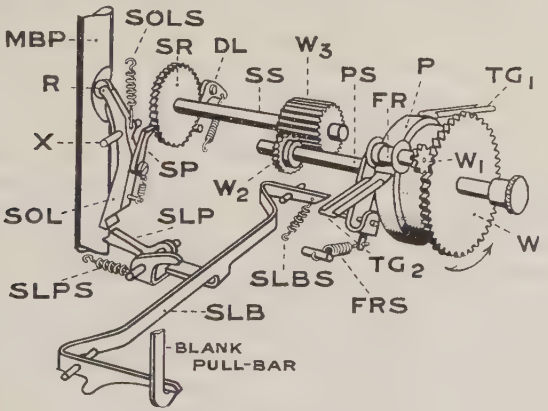

Fig. 449. Paper Feed Mechanism

locked until the main bail moves downwards and forces *LPB* forward.

Tape Feed. The paper tape upon which printing takes place is fed from a wheel at the side of the machine and passes through a tape guide TG_1 (Fig. 449), over a platen *P*, under a feed roll *FR*, and through a second guide TG_2. The feed roll is caused to press hard on the paper tape by means of a feed roll spring *FRS*, thus when the gear wheel *W* turns in the direction indicated by the arrow, the gear wheel W_1 fixed to *FR* rotates in the opposite direction, and the tape which is gripped between *FR* and the platen is fed forward.

The platen is fixed to a platen shaft *PS*, which carries a gear wheel W_2 at one end. This wheel is

enmeshed with a second and wider gear wheel W_3 mounted on the spacer shaft *SS*. At the other end of *SS* is a spacer ratchet *SR*, which is caused to turn one tooth at a time by a spacer pawl *SP*. This pawl is fixed to a space operating lever *SOL*, which carries a roller *R* at its upper end. The roller normally rests in a depression of the main bail plunger *MBP*. When the latter moves upward, *R* moves to the right and *SOL* turns on its pivot *X* against the tension of the space operating lever spring *SOLS*, so moving the spacer pawl *SP* downwards. When *MBP* returns to its original position and *R* rides into the depression, the movement of *SOL* and *SP* is reversed, and the ratchet is fed upwards one tooth. The spacer shaft *SS* is thus turned, and W_3 acting on W_2 causes the platen *P* to move the paper tape forward one letter space.

Spacing Cut-out. During normal operation, a spacer locking pawl *SLP* is held out of engagement with *SOL* by means of the spacer locking bail *SLB*, held in the position shown by the spacer locking bail spring *SLBS*. When the blank key lever of the keyboard is depressed, the resulting selection causes the blank pull bar in the printing unit to be moved upwards by the main bail. This pull bar terminates in a hook as shown, and during its upward travel lifts *SLB* so that the spacer locking pawl spring *SLPS* turns *SLP* until it engages the lower end of *SOL*, which has moved to the left on account of the upward movement of *MBP*. Thus, during the downward travel of the latter, roller *R* moves only partially into the depression. Consequently *SOL* and the spacer pawl *SP* do not turn enough to allow the latter to move the spacer ratchet wheel *SR*. Therefore the paper tape is not fed forward.

During the next selection, when *SLB* is not operated, *MBP* acts on roller *R* sufficiently to disengage *SOL* from *SLP*. The latter is then restored by spring *SLPS* and similarly *SLB* is restored by *SLBS*.

Bell Mechanism. Fig. 450 shows a device which serves to indicate when a fresh reel of paper tape is required. It consists chiefly of a bell-gong and hammer which gives an audible warning when the paper tape in use is nearly exhausted. The roller *R* carried at the end of the tape lever *TL*, rests against the underside of the tape reel and as the size of the reel diminishes, it rises under the action of the adjusting clamp spring

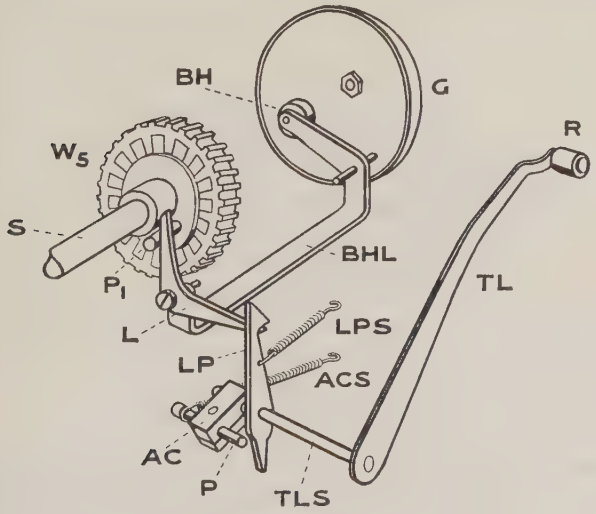

Fig. 450. Bell Mechanism

ACS attached to an adjusting clamp *AC*. The latter is rigidly fixed to the tape lever spindle *TLS*, which passes through a hole in a locking pawl *LP*. As *TL* rises, *TLS*, and consequently *AC*, turn until a pin *P* carried by the latter moves *LP* against the tension of the locking pawl spring *LPS* and releases the bell hammer lever *BHL*. The latter carries at one end the bell hammer *BH*, the weight of which causes *BHL* to turn until the hammer falls against the side of the gong *G* and gives an audible warning. A pin P_1 on the gear

wheel W_5 fitted at the end of the transmitting cam shaft S, thereafter catches the near end of BHL each time the shaft revolves, and in consequence the gong is repeatedly struck until a fresh reel is fitted and the trip mechanism of the bell is restored by hand.

Inversion. Two characters are cut on the face of each typebar, the secondary character being just above the primary. When the change from letters to figures

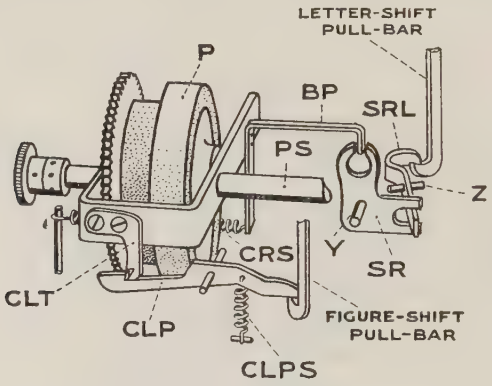

Fig. 451. Inversion Mechanism

is made the platen is moved to the front of the machine, thus when a typebar strikes the carbon ribbon, only the upper character is printed. The mechanism by which the position of the platen is altered is shown in Fig. 451. The p aten shaft PS is capable of moving endwise in its bearings, and when letters are printed it is held towards the rear of the machine by means of a carriage locking pawl CLP, which engages the carriage locking toe CLT. When the figure-shift signal is received, selection takes place in the normal manner, the code combs are set, and the figure shift pull bar is raised as the main bail moves upwards. The figure shift pull bar terminates in a hook at its lower end, and this lifts CLP against the

tension of the carriage locking pawl spring *CLPS*. The other end of *CLP* moves downwards and releases *CLT*. The carriage return spring *CRS*, attached to one end of the bent piece *BP*, thereupon pulls the platen shaft *PS* and the platen *P* towards the front of the machine. The upper end of *BP* is embraced by one end of the shift rocker *SR*, so that as it moves the shift rocker turns slightly on its pivot *Y* in an anticlockwise direction. The near end of the shift rocker lever *SRL* is thus lifted while the other end moves downward, *SRL* being pivoted at *Z*. When the change back from figures to letters occurs, the letter shift signal results in the letter shift pull bar being raised. This pull bar lifts the far end of *SRL*, and the near end, moving downwards, and causes *SR* to turn clockwise, and to pull the bent piece *BP* to the right. The platen shaft *PS* and platen are thereupon moved towards the rear position until *CLP* again engages *CLT*.

Ribbon Feed and Ribbon Reverse. Each time a character is printed the carbon ribbon is moved over the paper tape, hence the wear brought about by the action of the typebars is evenly distributed throughout its length. The ribbon itself is fed from one spool and is wound on to a second spool. When the former is almost exhausted the ribbon feed is automatically reversed in direction. The mechanism by which this is accomplished is shown in Fig. 452. The ribbon feed shaft *RFS* has a bevel gear at each end. In the figure, the right-hand bevel gear is engaged with that on the right-hand ribbon spool shaft. *RFS* can rotate and can also move endwise in its bearings, so that if moved to the left the bevel gear at that end engages with the gear of the left-hand ribbon spool shaft, while that on the right disengages.

The main bail plunger *MBP*, besides controlling the paper feed, also steps forward the carbon ribbon after each character is printed. The lower end of the ribbon feed lever *RFL*, under the tension of spring S_5,

normally rests in a depression on *MBP* until the latter moves upwards. When this occurs, the top of *RFL* moves towards the ribbon feed shaft and the ribbon

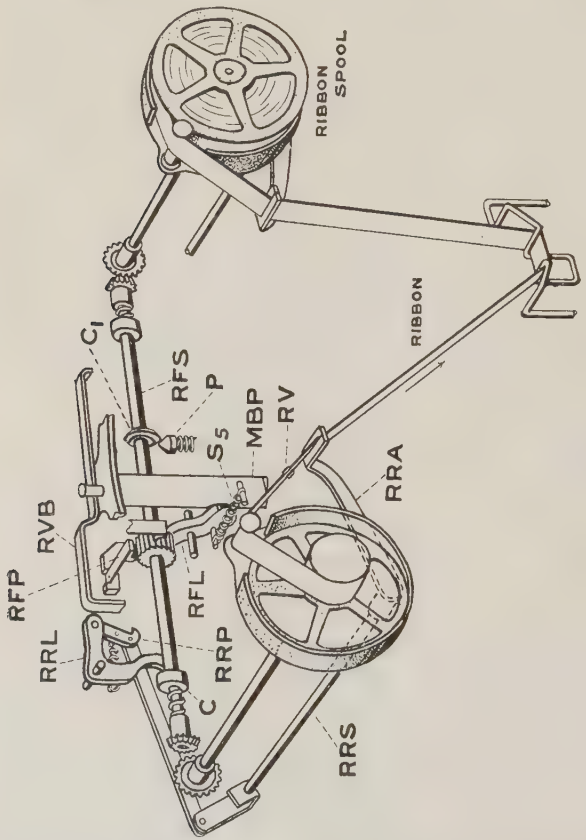

Fig. 452. Ribbon Feed Mechanism

feed pawl *RFP* slips over a tooth of the ribbon feed ratchet. During the downward travel of *MBP* the lower end of *RFL* passes into the depression and the feed ratchet is fed forward one tooth, so that the ribbon feed shaft *RFS* is turned slightly. This

movement is communicated to the right-hand ribbon spool by means of the bevel gearing, and a short length of ribbon is wound on to the spool.

When the left-hand spool is nearly exhausted, a rivet *RV* in the ribbon acts on the left-hand ribbon reverse arm *RRA*, causing it to move downwards and to push the upper end of the ribbon reverse pawl *RRP* into the path of the ribbon reverse bail *RVB* carried by *MBP*. During the downward movement of *MBP* the bail moves the pawl downward, turning the ribbon reverse lever *RRL*, so that its toe pushes against a raised collar *C* on the ribbon feed shaft and moves the latter to the left. When the right-hand ribbon spool is exhausted, the feed shaft is moved back by similar mechanism on the right of *MBP*. The ribbon feed shaft is held firmly in either of its two positions by means of a plunger *P*, which is forced upwards by a spring either to the left or right of the wedge-shaped collar C_1.

Governor. The governor is of the same type as the one described in connection with the typewheel teletype.

Connections. Owing to their similarity in construction, both the typewheel and typebar teletypes can be operated with identical circuit connections.

Simplex. Fig. 453 shows the connections of the standard simplex circuit generally used between a private wire renter's office and the Post Office. The 80^{v} battery situated at one office is connected in series with the line, electro-magnet coils, and transmitting contacts of each machine. When no messages are being transmitted, the two-way switches shown connect the line at each end to earth through the magneto generators MG_1, MG_2, and magneto bells MB_1 and MB_2. When either office wishes to obtain the attention of the other the handle of the magneto generator at that end of the circuit is turned, short-circuiting the local bell and ringing the one at the other end of the circuit. By mutual arrangement the two-way switches are then turned to connect the teletypes to

line and both motors are switched on. Until a key is depressed a current of 60 mA flows from the 80v battery to line via the sixth pair of transmitting contacts in each machine. The opening of one pair of contacts

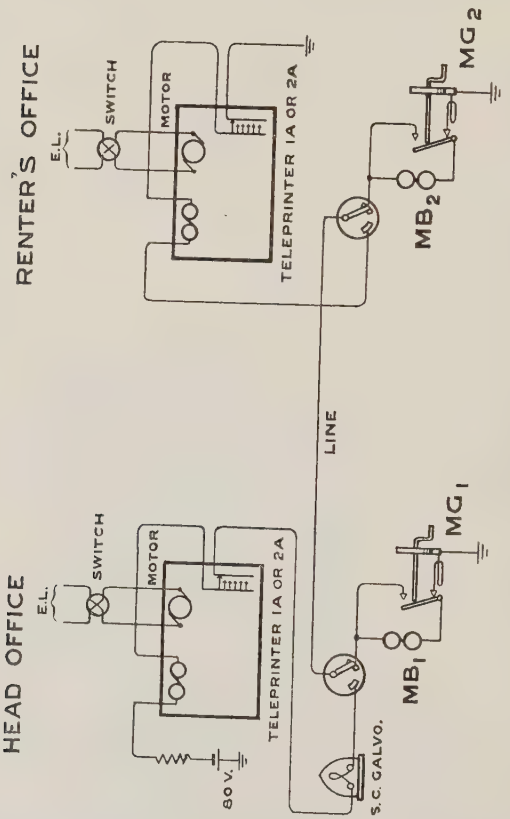

Fig. 453. Simplex Theoretical Connections

causes both receiving shafts to rotate, and subsequent closing and opening of the remaining contacts energizes and de-energizes both receiving electro-magnets, according to the impulses transmitted. The sending office thus receives a local record of transmitted signals.

The provision of the magneto-generators, and bells enables each motor to be switched off when no messages are being transmitted, and also results in economy of battery power.

Where a second line is available both motors can be controlled from either end of the circuit by means of a control relay—consisting of a solenoid and plunger—and a control switch, both of which form part of the teletype mechanism. The relays and switches on each

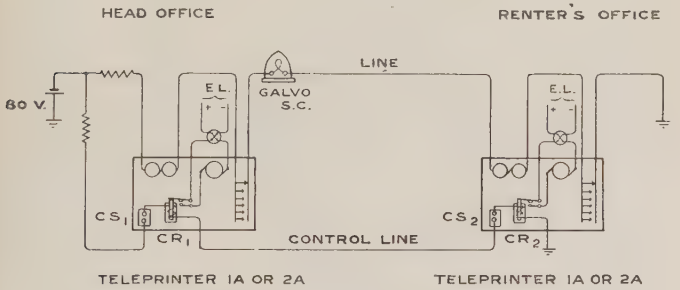

Fig. 454. Simplex with Control Line Theoretical Connections

machine are connected in series with the second line, as shown in Fig. 454. Normally, when neither teletype is in use, the control switches CS_1 and CS_2 are closed and a current from the 80^v battery passes through both control relays CR_1 and CR_2, causing the plunger in each case to be forced outwards from the solenoid, and to hold apart two flat contact springs. The latter form part of the corresponding motor circuit, which is accordingly disconnected. The operation of either control switch breaks the circuit through the relays, each plunger is restored by one of the associated contact springs, and both motors continue to run until the particular switch operated is closed.

Duplex. Fig. 455 shows the standard duplex connections. In this case a 24^v battery is connected in

series with the transmitting contacts of the teletype and the coils of a transmitting relay. The latter is required in order to work double current to line. Normally, a current of 20 mA passes through the relay in such a direction as to cause the tongue to rest against

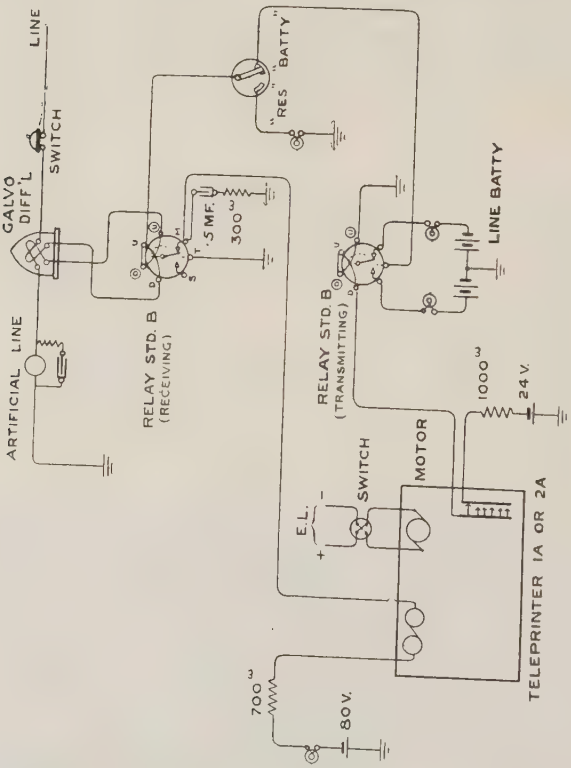

FIG. 455. D.C. DUPLEX THEORETICAL CONNECTIONS

the marking contact screw. When the start signal or any subsequent " no current " impulse is transmitted, the current ceases and the tongue passes to the spacing contact on account of a spacing bias with which the relay is set. The line battery is connected to the *S* and *M* terminals, by which means spacing and marking

currents are sent to line. The relay tongue acts as the key in ordinary Morse duplex working. The apparatus at each end of the circuit is wired similarly, the negative pole of each sending battery being connected to line when a marking signal is transmitted. As the tongue of each transmitting relay lies against the marking contact when the circuit is idle, the sending batteries are opposed in the line, thus a current flows only in each compensation circuit, passing in each case from *U* to *D* through the receiving relay. Thus the local circuit in which is included the teletype electro-magnet is closed. The 300^{ω} resistance coil and ·5 mfd. condenser connected between the *T* and *M* terminals of the receiving relay are for the purpose of eliminating sparking at the relay contacts, due to the inductance of the teletype electro-magnet coils.

At offices where universal batteries are not installed, power for the local circuit is obtained from the electric light mains.

ADJUSTMENTS

The following are working adjustments, such as may frequently be required for duplex working, and are applicable to both the typewheel and typebar teletype.

Speed. To check speed the black spots painted on the flywheel of the governor are viewed through the tines of a vibrating tuning fork. They should appear stationary when the blank key lever of the keyboard is depressed, and the transmitting clutch is running free.

Transmitting Relay. This should be set with a spacing bias such that the top of the galvanometer needle lies about two degrees to the left of zero (i.e. spacing side) when the letter *R* is sent continuously and the transmitting clutch in this case is also running free.

Receiving Relay. This should be set neutral.

Electro-magnet Armature Spring. The letters *R* and *Y* should be transmitted alternately, and the tension of the spring increased until the machine just fails to print correctly. The tension should then be reduced and the number of turns given to the adjusting screw counted until errors in printing again occur. The best position for the adjusting screw will then be found to be midway between these limits.

CHAPTER XVII

SECONDARY CELLS AND SECONDARY CELL WORKING

PART I. SECONDARY CELLS*

A SECONDARY cell or accumulator may be regarded as a reversible primary cell in which chemical energy may be restored to the cell in return for electrical energy. It has previously been shown that when a current is taken from a primary cell the constituents of the cell are re-arranged in such a way that the electrical energy produced is accounted for by the difference between the chemical energy possessed by the cell in its original and in its re-arranged forms. If an electric current is passed through an exhausted cell in opposition to its E.M.F. the chemical compounds re-assume their original form and a current may again be taken from the cell. In this operation electrical energy is transformed into chemical energy. Every primary cell will, to some extent, behave as a secondary cell.

The secondary cell of practice may be defined as a voltaic cell such that, when discharged, the elements combine with the electrolyte to form compounds which remain insoluble, which compounds may be converted to their original condition by the passage of a current in the reverse direction.

All the secondary cells used by the Post Office consist essentially of lead plates with dilute sulphuric acid electrolyte but differ in type, in assembly, or arrangement, and in the method of producing the active material. The chemical action in every lead

* *Secondary Cells*, by R. G. de Wardt, I.P.O.E.E., Printed Paper No. 82. Also, *Secondary Cells*, by H. M. Turner, read before the South Lancashire District Centre, I.P.O.E.E., 17th December, 1928. *The A.B.C. of Storage Battery Maintenance*, by E. C. McKinnon; *The Lead Storage Battery*, by H. G. Brown.

sulphuric acid cell is the same. When fully charged the active material on the positive plate is peroxide of lead (PbO_2), whilst that on the negative is spongy lead. On discharge an increasing proportion of the active material of both positive and negative plates is converted to lead sulphate ($PbSO_4$). On charge the positive plate assumes a rich chocolate colour, but this change is often obscured by a thin non-adherent film of powdered peroxide. This powder, not being in electrical contact with the plate, is not peroxidized on charge and is consequently light-coloured. The true colour of the plate can readily be ascertained by lightly stroking the tops or edges of the plate with a strip of wood or ebonite and so removing the film. The colour of the negative plates is light grey. When the cells are discharged, the true shade of colour of the positives will be found to have grown somewhat lighter. The fact of the sulphation occurring gradually throughout the material accounts for its not showing itself in the form of a grey colour upon the plates.

The pole and plate connected to the positive pole of the generator during charging (i.e. the positive pole of the cell, when discharging) are termed respectively the positive pole and the positive plate. This convention differs from that used in the case of primary cells where the positive pole is the negative element. This is equally true of secondary cells, but convention and usage have established the nomenclature already mentioned, and it will now be understood that by the positive and negative plates are meant those to which the positive and negative poles of the battery or other source of E.M.F. are respectively connected for charging purposes. The positive plate is readily recognizable by its dark colour in contrast with the grey tinge of the negatives.

The active material may be supplied either by forming it out of, and on, the plate itself or by applying it in the form of a paste. Modern practice favours

Planté or formed positives with Faure or pasted negatives—the formed negative having disappeared entirely. Improvements in Planté plates have for their object: (i) the simplification of the process of formation either by chemical process, the passage of current, or combination of both; (ii) the improvement of the mechanical design so as to equalize the wear and tear in service and the chemical stresses on charge and discharge over the whole surface of the plate, and hence to ensure a long life; and (iii) the increasing of the active surface. In pasted plates the problem is chiefly in the direction of securing better adherence between the plates and the paste.

Secondary cells are made by many manufacturers, and differ somewhat in constructional detail, but more especially in the paste employed. The present account is confined to general principles.

Chemistry of Secondary Cells. The chemistry of secondary cells is not known with any degree of certainty at the present time, and this notwithstanding the fact that many eminent chemists have devoted much study to it.

Secondary cells of the lead-sulphuric acid type differ only in the form of the plates or grids, and the method of preparing the active material. A mixture of litharge (lead monoxide) and sulphuric acid is used for pasting the negative plates, since this requires less energy to reduce than a higher oxide, such as minium (Pb_3O_4), which is generally used for the active material of pasted type positive plates. The effect of immersing such plates in sulphuric acid is to convert these oxides to sulphate of lead. On subsequent charging this is converted to spongy lead at the negative and lead peroxide at the positive. A charged Planté cell has the lead at the positive oxidized and spongy lead formed at the negative. The formation of the cell consists in producing the maximum quantity of active material (spongy lead and lead peroxide) upon the plates.

On discharge the active material of both plates becomes partially converted to lead sulphate, $PbSO_4$. This action takes place more or less uniformly throughout the material, but on a quick discharge there is a tendency for the bigger proportion of the action to take place on the surface as there is then less time for electrolyte to diffuse into the pores of the plate from outside. It is for this reason that a cell will give a greater capacity at low discharge rates than at high rates, e.g. a cell which will give 50 ampere-hours in 1 hour will be capable of giving 100 ampere-hours in 10 hours. The weakening of the acid in the pores of the plates is the main cause of the increase in internal resistance which occurs on discharge. This in turn reduces the voltage available at the terminals, and when the terminal voltage has fallen from 2·00 to 1·83 at the 9 or 10-hour discharge rate, the cell is usually regarded as being fully discharged.

If a cell is over-discharged or is allowed to stand in a discharged condition, there is a tendency for the sulphate in the active material to crystallize out into small white crystals of lead sulphate, $PbSO_4$. These crystals being practically insulators, are not readily got at by the charging current, and the eventual result is a permanent loss in capacity.

On charge the chemical action on the plates is reversed, and the active material is converted back to lead peroxide in the case of the positive and spongy lead in the case of the negative plate. When the action is nearly completed, the excess charging current commences to decompose the water in the electrolyte into oxygen and hydrogen, the former being given off at the positive plates and the latter at the negative. This gassing naturally causes wear and tear on the plates, particularly in the case of the positives. Excessive overcharging hence results in undue throwing down of sediment, overheating, and excessive decomposition of water from the electrolyte, so that more

topping up water is periodically required. The effect of overcharging on negative plates is less serious, but it usually leads to spongy lead growth being formed on the top of the negative plates. The ordinary working active material is thrown down from the positive plates either as lead peroxide or lead sulphate. During the gassing period of charging, strong circulation currents set up by the rush of gas bubbles, carry some of the finely-divided lead peroxide and lead sulphate above the level of the plates. Any which then falls on the tops of the negative plates becomes converted into spongy lead. That which lodges on the tops of the positive plates remains inert. The presence of these growths is a sure indication of overcharging, and in very serious cases they may sometimes lead to short-circuits developing.

Chemical Formulae.* The "double sulphation" theory of Gladstone and Tribe is still generally accepted as a close approximation to the probable facts since the calculated voltage of a secondary cell from thermo-chemical reactions† postulated accords roughly with the observed voltage.

The action may be represented as shown on next page.

* The Fèry theory (*P.O.E.E. Journal*, Vol. XII, p. 143) that Pb_2O_5 is formed at the positive has been disproved. The average composition of the active material on fully-charged plates is approximately—

Positive		*Negative*	
PbO_2	90 per cent	Spongy lead	95 per cent
PbO	7 „ „	PbO	3 „ „
$PbSO_4$	3 „ „	$PbSO_4$	2 „ „

The 3 per cent of lead sulphate which remains on a charged positive plate is not easily removed by excess charging and is actually of considerable importance in acting as a binder of the active material.

† The E.M.F. of any chemical reaction can be shown to be equal to $JH\epsilon$, where J is Joule's equivalent (42×10^6), H is the heat of combination evolved by one gramme of the substance when it enters into the combination in question, and ϵ is its electro-chemical equivalent—46,000 calories corresponds to one volt.

First Stage—

Charged

Positive Negative

$$PbO_2 + 2\,H_2SO_4 + Pb$$

One molecule of lead peroxide combines with Two molecules of sulphuric acid and One atom of lead

Discharged

Positive Negative

$$= \underbrace{PbO + {}_2HSO_4} + H_2O + PbSO_4.$$

to form One molecule of lead monoxide and One molecule of sulphuric acid and One molecule of water and One molecule of lead sulphate

The monoxide of lead and sulphuric acid are shown bracketed together since they react and thus form lead

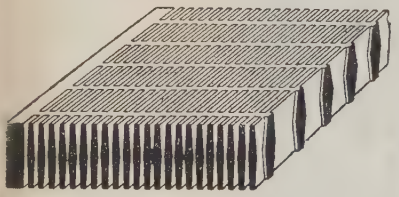

Fig. 456. Planté Plate without a Core or Diaphragm

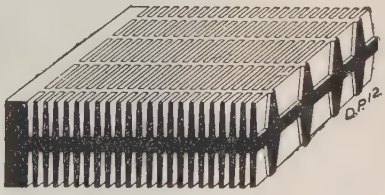

Fig. 457. Planté Plate with Core

sulphate and water. This action is purely chemical as distinguished from electro-chemical, and therefore has no effect upon the E.M.F. of the cell.

Second Stage—

Action at the positive pole—

$$PbO + H_2SO_4 = PbSO_4 + H_2O$$

One molecule of lead monoxide combines with One molecule of sulphuric acid to form One molecule of lead sulphate and One molecule of water

Positive Plates. The Planté plate consists of a pure lead casting with deep vertical grooves in its surface to render its developed area large in comparison with its

superficial area. Some plates have a core or diaphragm formed midway through the plates, from which the leaves or *laminae* formed by the grooves stand out (Fig. 457). Others are without a core and the grooves pass through the plate so that the unformed grid can be seen through when held up to the light (Fig. 456).

FIG. 458. PLANTÉ POSITIVE PLATE
(CHLORIDE CELL)

The effect on buckling of the presence of a core is a debatable point, since it can be argued that the action on the two sides of a coreless plate will be more uniform on account of better acid circulation, so that the tendency to buckle will be less. Another important point is that a coreless plate has practically no tendency to expand laterally, and thus give rise to burst containers. Its expansion is entirely in a downwards direction.

Planté positive plates are invariably thicker and heavier than the corresponding negatives. A typical Planté positive is shown in Fig. 458.

Chloride Rosette Cells. The positives of the Chloride Rosette cell form a third or intermediate class between the Faure or pasted and the Planté types, since the

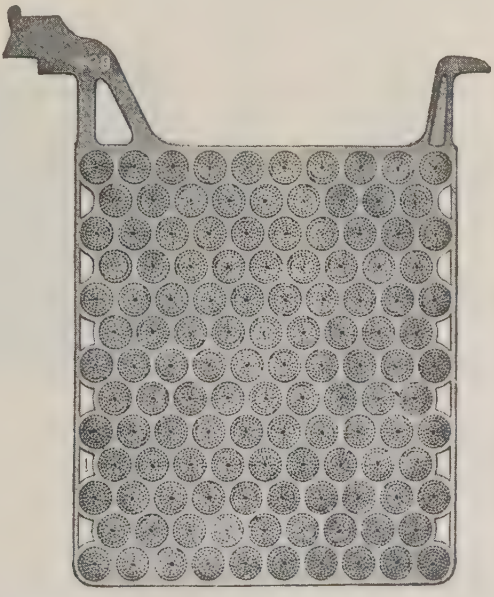

Fig. 459. Chloride Rosette Positive Plate

active material is not applied to the plates in the form of a paste nor is it formed actually on the plate itself, but on spirals of lead tape, fixed in the grid.

The lead antimony mixture of which the grid of the positive plate is formed is run into moulds under an air pressure of 180 lb. per sq. in., in order to ensure a perfectly homogeneous casting. The 124 circular holes of the " S " type are cast countersunk on both sides of

the plate so as to provide for the expansion (during formation) of the active material which they support. This active material consists of a strip of pure lead which is pressed cold at a pressure of 4000 lb. per sq. in.; it is gimped or corrugated with grooves and ridges in a button machine which cuts off the requisite

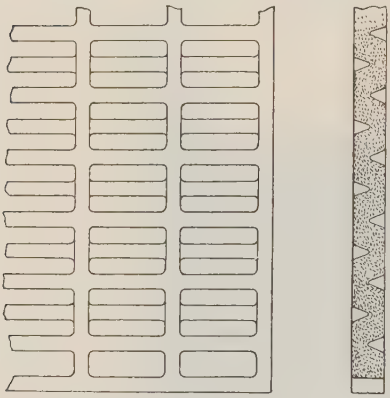

Fig. 460. Portion of a Basket Negative Plate and Section showing Plate (D.P. Battery)

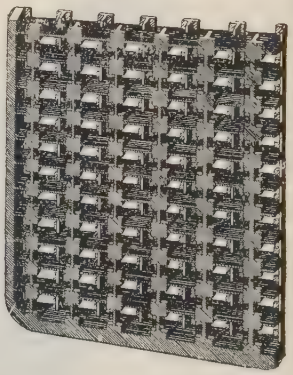

Fig. 461. Perspective View of a Portion of a Typical Form of Lattice Negative (Obsolescent)

length and winds it into a rosette. The rosettes are inserted in the holes in the plate, and finally subjected to a heavy pressure, thus driving the buttons home and ensuring perfect contact. The plate is then subjected to a modified Planté formation process, during which the surface of the rosette is peroxidized.

Box negatives (Fig. 462) are used in conjunction with these positives to form the Chloride Rosette Cell.

Negative Plates. There are three general types of pasted negative which may be described as (i) basket negatives (Fig. 460), (ii) lattice negatives (Fig. 461), and (iii) box negatives (Fig. 462), the last-named being the type in most general use. In the two former types

the formation of the grid is designed to provide close and continued adherence of the paste by keying it into the structure of the grid.

The box negative plate is made in two halves, riveted together after the insertion of the active material, which is thus contained in a series of small cages or

Fig. 462. Box Negative Plate (Chloride Cell)

boxes, and it is for this reason that this type of plate is called a " box " negative. It will be noticed from the illustration that the outside of a plate is covered with a finely perforated sheet of lead which prevents the active material from falling out.

For capacities between 8 and 40 ampere-hours, cells stationary No. 1, 2, 3, 4, to 5 are used, the number denoting the number of 8 ampere-hour positives per cell respectively. The Chloride types are known as

GPZ. These cells employ pasted type plates and have one more negative than positive and the separators are of the ebonite fork type. The element is held together by means of a rubber band passing right around it.

The Container and Mounting. The containing vessel consists of a glass box in the case of small cells (Figs. 463 and 464), and of a lead or lead-lined wood tank for larger cells. The depth of the container is proportioned to allow a clear space below the plates in which sediment may accumulate for a considerable time without touching the plates.

Small cells are sometimes placed upon shallow wooden trays filled with sawdust, so as to distribute evenly the weight of the cell and avoid the risk of breakage due to unequal stresses upon the bottom of the glass box. Lead or rubber washers placed between the jar and the insulator are frequently used instead of wood trays.

The racks are usually formed of stout beams of timber with mushroom insulators upon which the trays are placed. The insulator (Fig. 465) consists of two glass castings fitted as shown, but with the lower part partially filled with insulating oil. This prevents the formation of a continuous layer of moisture between the cell and the support, so long as the surface of the oil is free from dirt.

Positive and Negative Sections. The positive section consists of a number of positive plates burnt to a lead bar, which is in section, either rectangular for small cells (Figs. 463 and 464) or channel section for large ones. In the case of the latter the negative plates of the next cell are burnt to the same channel bar, whilst in the former the connection is made by a lead or lead-covered brass bolt passing through the two separate lugs.

The number of plates in the negative section is always one more than the number of positive plates

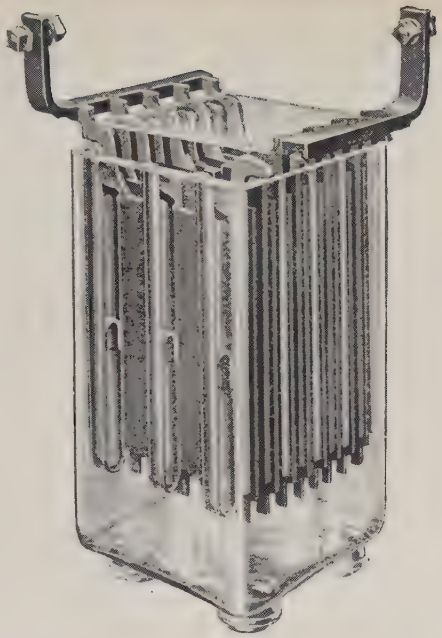

Fig. 463. Chloride Planté Cell. Type SFG4

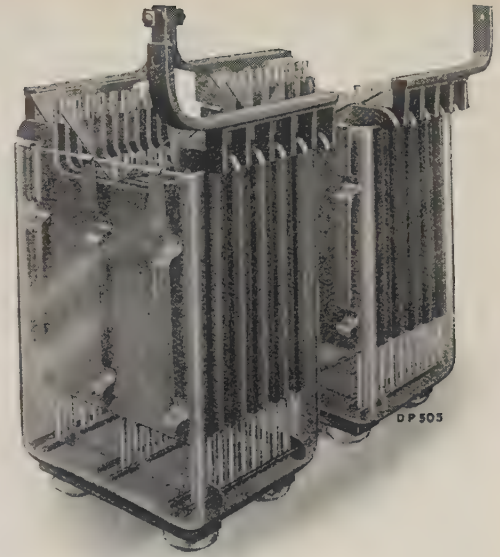

Fig. 464. D.P. Cells. Type L11 (Planté Positives with Box Negatives, Capacity 300 Ampere-hours)

in the cell in order to make use of all the positive surface and to avoid buckling. As each positive plate carries the current to or from the adjacent negative surfaces an end positive deals with half the current carried by the active material on the last negative but one and the whole current carried by the end negative. For this reason, and with the object of preventing the overloading of the last positive, end negatives are sometimes made in what is known as

FIG. 465. APPEARANCE AND SECTION OF AN INSULATOR

" half " negatives—that is, the end plate carries one-half the normal amount of active material.

Since the number of positive is one less than the number of negative plates, the total number of plates in the cells is always an odd number.

Separators and Spray Plates. Glass rods or glass tubes are placed between the plates in every form of cell used by the Post Office, in order to minimize the risk of internal short circuits by plates coming into contact with each other when buckling or displacement occurs. There are cells in which a thin wood diaphragm takes the place of the glass separators, but this arrangement is only used by the Post Office in very small cells, usually of the portable type.

Separators of the glass rod or tube type are half-an-inch in diameter (the plates being thus spaced $\frac{1}{2}$ in. apart), and are fitted not more than 4 in. from each other, with a minimum distance of 1 in. from the edges of the plates. The outer separators are supported by snugs cast in the negative plates and extend to the bottom of the container.

Thin sheets of glass, termed spray plates, are placed at an angle to the top of the plates. They serve the double purpose of preventing the ingress of dust and dirt and of arresting the loss of acid through spraying whilst the cell is "gassing." Any electrolyte thrown off as spray is intercepted by these plates and runs back into the cell. Nevertheless, acid spray escapes into the atmosphere, producing acid-laden air, which is objectionably pungent, and attacks and destroys metal work in the vicinity of the cells. In order to obviate these difficulties, the Post Office place a thin layer of pure petroleum oil* on the surface of the electrolyte. Not only does this prevent contamination of the air in a battery room, but it also very materially reduces evaporation of the water from the cells and so obviates the need for frequent attention for "topping up."

Plate Supports and Packing Pieces. The plates are, except in the smallest sizes, supported by nibs or projections on them. These nibs or projections rest on the edges of the container in the case of glass boxes (see Fig. 463), or on plate glass side-plates where lead or lead-lined wood tanks are used. The nibs are of such dimensions that considerable lateral expansion of the plates can take place before the edges of the plates touch either the sides of the container or the glass side plates, as the case may be. The glass side plates are carried in lead channels, placed in the bottom of the containers. In the case of very small cells, bottom

* The specification for the oil used is as follows: (1) It shall be free from acids, alkali, sulphur, moisture and dirt. (2) Sp. Gr. at 60° F. of between ·823 and ·828. (3) Flash point, by Abel close test, not lower than 240° F. (4) Viscosity, by Redwood's viscometer, for 50 cubic cm., 62 to 72 seconds at 40° F. (5) Loss by heating in open vessel, not more than 0·5 per cent after 6 hours at 212° F. (6) No more than a trace of precipitated matter after passing a current of air at 30 cubic cm. per minute through 100 cubic cm. of the oil heated to 300° F. for three periods, each of 8 hours, on consecutive days. (7) A specific resistance of 5 million megohms per cubic cm. at a pressure of 500–700 volts, and at 60°—75° F.

blocks of ebonite or treated wood in which the plates stand are used.

With all types of container the end negatives have a tendency to "fan out," causing the positives to be overworked on the upper surface, and as a result the positives sometimes break away. Further, in the case of lead or lead-lined containers, this tendency, if not provided for, may lead to contacts between the end negatives and the container, the latter thus becoming in effect part of the negative plates. When this occurs, the sediment which gradually forms at the bottom is first reduced to spongy lead and then converted into abnormal sulphate, which cannot be removed without dismantling the cell. It is usual, therefore, to insert lead springs or strips of corrugated lead between the container and the end negatives supplemented, in the case of lead or lead-lined tanks, by glass rods between the springs and the plates.

Electrolyte. Concentrated sulphuric acid has a specific gravity of 1·840, and for battery use should be diluted to the required extent with distilled water. The acid must be chemically pure and it is specially important that it should be free from iron. In practice this is not only the most common but the most serious impurity. The acid should also be free from arsenic, nitric, or hydrochloric acid in any form. In no circumstances should acid having a specific gravity of over 1·230 be introduced into any cell with a celluloid container or one having celluloid separators.

When diluting acid, it should be borne in mind that the acid should be added to the water and not the water to the acid, since the temperature is kept within better limits, and there is less risk of the sudden heating up leading to dangerous boiling up or spurting of the mixture. As the specific gravity of the acid is affected by temperature, a correction of ·001 should be made for every 3° F. above or below 60° F. respectively.

The Hydrometer. The chemical equations on page 739 show that the percentage of acid in the electrolyte

is greatest when the cell is fully charged and is least when it is completely discharged. The specific gravity of the solution is therefore an index to the charge or quantity of energy in the cell. It also serves as a guide to the behaviour and condition of the cells. The type of hydrometer frequently employed for testing the gravity is shown in Fig. 466. Its range should be from 1·170 to 1·220, the gravity of pure acid being 1·840. The hydrometer is allowed to float in the solution, the gravity of which is equal to the value marked upon the scale at the level of the liquid.

The ordinary hydrometer is read by the marks on the scale at the surface of the electrolyte which, due to surface tension, heaps up around the stem and thus renders very accurate readings impossible. The Lucsmart hydrometer, which is essential in all cases where an oil layer is employed, raises the cursor line or reading point above the level of the electrolyte with the aid of a float—the gravity being read at the top of the float. The hydrometer proper is, of course, specially calibrated in conjunction with the float. The arrangement will, however, be quite apparent from a consideration of Fig. 467, and it may here be emphasized that a close study of the readings gives the best indications as to the behaviour of the cells.*

Fig. 466 Hydrometer

The state of charge of the cells and the ampere-hour capacity remaining in a battery can be determined by multiplying the difference between the specific gravity reading at full charge and at the time of test by the *specific gravity constant* and subtracting the result from the

* *Secondary Cell Maintenance*, by J. G. Lucas, *P.O.E.E. Journal*, Vol. VI, p. 336.

total ampere-hour capacity. The specific gravity constant is the figure obtained by dividing the ampere-hour output measured on a test discharge at a 9-hour discharge rate by the number of divisions that the specific gravity has fallen during the test discharge.

When the containers are not completely equipped with the full number of positive and negative plates, an adequate range of specific gravity is obtained by limiting the amount of acid available in the cell to that actually required for satisfactory work. This result was formerly accomplished by putting a displacement tank (a weighted lead box) in the space not occupied by plates. The latest practice is to burn a lead partition across the inside of the container. The unused portion of the container is filled with acid so as to equalize the pressure on the two sides of the partition. When, later, it becomes necessary to extend the battery to its full capacity, the displacement tanks or lead partitions are removed and the extra plates for which the container was designed are added.

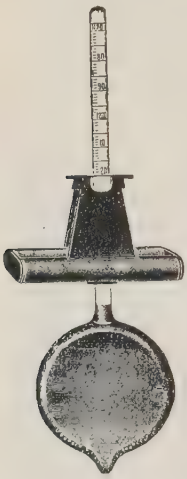

FIG. 467
"LUCSMART"
HYDROMETER

E.M.F. on Charge and Discharge. For charging secondary cells the E.M.F. of the dynamo should be from 2·6 to 2·75 volts per cell. The opposing E.M.F. of the battery rises to 2·6 volts per cell at the end of the charge, but upon disconnecting the dynamo the E.M.F. almost at once falls to rather less than 2·2 volts—in fact, the practical maximum should be regarded as 2·1 volts. During the greater part of the discharge the E.M.F. very closely approximates to 2 volts, and it is only towards the end of the discharge that it falls below this value. After 1·83 volts is reached the E.M.F. falls

rapidly, and if the discharge is continued serious injury to the plates will result.

Internal Resistance and Temperature. The internal resistance of even the smallest type of secondary cell is extremely low. The internal resistance of a cell with Planté plates does not appreciably vary with increased discharge current. The resistance of dilute sulphuric acid is least when the acid is 30 per cent and water 70 per cent, or specific gravity 1·224. With 10 per cent acid the resistivity is 67 per cent higher and 84 per cent higher with 60 per cent acid.

The temperature at which the cell is working also affects the E.M.F., specific gravity, and capacity of a cell. The higher the temperature at which the cell is working the greater the capacity, but working at an abnormally high temperature will seriously reduce the life of the elements. The actual increase in capacity of a secondary cell varies from 1 per cent to 3 per cent per 1° C. rise, dependent on the rate of discharge and design of the elements. In the Chloride Planté type GLW4, having a capacity of 400 ampere hours at the nine-hour rate, the internal resistance is ·00075 ohm when fully charged.

Size of Cells.* The dimensions of cells by various makers differ considerably for the same ampere-hour capacity. The table on page 752 gives the existing Post Office standard range of plate sizes. It is assumed that the cells are discharged down to 1·83 volts.

The charging rate is limited only by the size of the lugs, which are usually designed to carry 70 amperes per sq. in. of cross-section and the necessity to cut down the current at the gassing stage so as to avoid violent action. In general, the charging rate should never exceed twice, nor should it be less than half, the normal rate. In clearing sulphating, a lower rate than half rate is sometimes necessary.

A factor which limits the charging current, particularly during the gassing stage, is overheating. This applies particularly to very large cells. The maximum

* The ampere-hour capacity of a secondary cell, at a 9-hour rate of discharge, can be calculated from Lucas's formula $A\sqrt[5]{T^2}$, i.e. $AT^{2/5}$, where A is the area of one side of each positive in square inches $\times$ the number of positives and T is the thickness of the positive plate in inches.

Capacity in Amp.-hours (at 10-hr. rate)	Size of Positive Plate in Inches			Capacity in Amp.-hours per Positive Plate (at 9-hr. rate)
	Length	Breadth	Thickness	
8 to 40	4	4	·2	8
75 ,, 125	5	$6\frac{1}{2}$	·47	25
200 ,, 300	7	$9\frac{3}{8}$	·47	50
400 ,, 2000	10	13	·47	100
450 ,, 2250	14	14	·47	150
600 ,, 6000	14	20	·41	200
1800 ,, 10500	14	30	·41	300
2580 ,, 15050	20·67	28·94	·41	432

temperature usually regarded as permissible is 100° F.

The details of one large battery are given below—

Number of Plates + and −	Size of Plates	Capacity in Ampere-hours at 9-hour Rate	Maximum Discharge Rate for 1 hour
83	14 × 16 × ·43	6720	3440

Counter E.M.F. Cells. It is sometimes necessary to obtain a particular voltage not provided by the secondary cell installation and this is done by inserting the requisite number of counter E.M.F. cells in the lead. For example, 50^{v} would be obtained by joining up 15 of these cells in the 80^{v} lead. The cells are practically plain lead plates in ordinary secondary cell dilute sulphuric acid.

Treatment of Cells. In erecting a new set of cells the acid should, upon no account, be put into the cells until everything is in readiness for commencing to charge. This first or " initial " charge should preferably continue without intermission for from 36 to 40 hours —in some cases even longer. If it is not possible to arrange this the charge may be stopped after 18 to 24 hours, but current must not be taken from the cells. The specific gravity of the electrolyte falls

gradually to 1170 in 12 hours and then begins to rise again. The first charge is continued until the gravity rises to its full value, and both plates gas freely whilst the solution attains a "milky" appearance. The charging rate for the first twelve hours is usually about one-half of the maximum rate. After this period it is increased to the full rate, but, should the negatives fail to gas freely whilst the positives do so, or vice versa, the charging rate is again cut down until this occurs. This initial charge should be continued until the specific gravity remains constant for 4 or 5 hours. This is most important as the future behaviour of the cells depends on the proper completion of the initial charge.

In general, the range of the specific gravity between the charged and discharged conditions is from 30 to 35 points, with a minimum of 1·180 for the discharged condition. When a cell is fully charged the specific gravity ceases to rise, the voltage rises to 2·6 volts and both positive and negative plates gas freely.

The ampere-hour efficiency of a battery is obtained by taking the ratio of the current in amperes $\times$ time in hours for the charge as compared with the discharge. The watt-hour efficiency is a comparison of the energies involved, i.e. the voltage, current, and time are taken into consideration.

The percentage of overcharge necessary to keep the cells in good condition depends to some extent on the amount of work done, that is to say, assuming for the sake of argument that a battery is doing no work at all, but is standing on open circuit, occasional charging will be necessary in order to keep the cells in good condition, and therefore the efficiency of the cells, regarded as efficiency, will be low. Similarly, if a battery is getting, comparatively speaking, little work, or if its discharge is at a very low rate, and spread over considerable periods, the amount of charging necessary to keep it in good condition will be more than if the battery was discharged regularly every day

to within a reasonable limit of its capacity, but in considering small cells, such as are in general use for telephone work, satisfactory service is of far more importance than 90 per cent efficiency.

Regular readings of specific gravity before and after charge, and the voltage of individual cells should be taken and recorded as they constitute valuable information as to the condition of the cells. It is far better to have early indication of any tendency to failure of an individual cell, than to ascertain by palpable evidence of a drop in voltage that a failure has occurred.

For this reason it is a good practice to look over the cells when they begin to gas to see that they all gas evenly, so that any trouble may be detected and remedied before the charging is completed. When cells are very lightly worked there may be some variation in the specific gravity of adjacent cells, which if it only amounts to a few degrees requires no attention, but should the specific gravity vary considerably after a gassing charge it may become necessary to adjust it. In order to avoid persistent overcharging, which entails excessive gassing and disintegrates the active material, with a consequent accumulation of deposit at the bottom of the boxes and a decrease in the capacity and life of the plates, it is well that on ordinary occasions of re-charging only about 10 to 15 per cent more should be put into the cells than has been taken out. About once a month, or in the case of unattended cells which are usually lightly worked, once a quarter, an equalizing "overcharge" should be given them, that is to say, the charging should be carried to a complete maximum, so as to reduce all sulphate, level the specific gravities, and keep the plates in good condition. Under some conditions of service, however, it is not necessary to charge so often as once in two weeks, and in such cases each charge becomes an "overcharge," and it is highly desirable when cells are charged at infrequent intervals to make sure that all the conditions of full charge are reached. This can only be ensured by continuing to charge for a comparatively long period after the cells are apparently full, to ascertain definitely whether the voltage and specific gravity have risen to their maximum values.

Evaporation, and the loss of the electrolyte through charging, should be made good by the addition of water, and it is worth while taking steps to see that the water used for this purpose is suitable. In many towns tap-water exhibits an amount of

hardness which is deleterious to the cells, and in such cases it is preferable that distilled water only should be used for topping up. The level of the electrolyte should be maintained by the addition of *distilled* water above the tops of the plates ; about half an inch above the tops when the cells are quiescent is the usual level.

Failure to keep the plates covered gives rise to many troubles apart from the loss of capacity owing to the reduced area of the plates in action.

Where for any reason it is found that the capacity available is insufficient, steps should be taken perhaps by more frequent charging to lessen the demand on the cell over a given period, or to arrange for cells with a larger capacity to be installed. The troubles to be apprehended by installing cells with too large a capacity bear no comparison whatever with the troubles which are likely to be met with if the capacity of the battery is too small.

Cadmium Testing. Cadmium Testing is a useful method of determining the relative condition of the positive and negative plates in a cell. Its commonest application is when one cell in a battery is low in capacity and it is desired to find whether this is due to a weak positive or a weak negative section.

Cadmium is a metal inert chemically to sulphuric acid, and when inserted into the electrolyte of a cell it takes up a definite voltage with respect to the sulphuric acid, irrespective of any current which may be going in or out of the cell, hence the voltage between the positive group and the cadmium can be measured, and likewise the voltage between the negative group and the cadmium. The algebraic sum of these two readings is, of course, the terminal voltage of the cell.

On open circuit, when the cell is reading say 2·05 volts, the voltage between positive and cadmium will usually read about 2·20 volts, and between negative and cadmium about 0·15 volt, the cadmium being then negative to the negative group. These readings are of far less value than those obtained on discharge. At the end of a 10-hour rate discharge, when the terminal voltage will be, say, 1·85, the positive reading to cadmium will usually be between 2·03 and 2·05 volts, and negative to cadmium between 0·18 and 0·20 volt. The positive voltage to cadmium thus falls gradually during discharge while the negative voltage to cadmium rises. If the positive voltage falls below or the negative rises above these figures, the element in question is thus revealed to be weak, so that this test can readily be applied to any cell which has fallen below the permissible minimum voltage on a discharge test.

Cadmium readings may also be taken on charge, but such readings have little practical application outside the laboratory. The readings obtained also tend to be more erratic than on discharge. However, it may be noted that the positive reading to cadmium will normally rise from about 2·27 to 2·5 during the course of a normal recharge. The negative to cadmium will start at about 0·13 with the cadmium negative to the negative group, but towards the end of the charge it will become positive to the negative group and will finally reach a voltage of about 0·25 to the negative group.

In practice the cadmium is usually used in the form of a stick surrounded with a perforated ebonite sheathing in order to insulate it. It should be washed thoroughly in the electrolyte for several minutes before using, particularly if it is new or has not been used for some time. When taking a reading the cadmium stick should lie across the tops of the plates and at right angles to them. It should also be soaked thoroughly in water after use. In view of the very small variations of voltage readings obtained, particularly between cadmium and negative, it is essential that a very accurate voltmeter should be used for taking cadmium readings.

Battery Room. The battery room should be of ample size, and good ventilation is necessary owing to the acid spray and gases which pervade the atmosphere whilst charging is proceeding. In a confined space these gases are explosive. The room should be cool (temperature of from 50° to 80° F.); it should be well lighted (preferably daylight) and should have wall plugs fixed for the connection of hand lamps. It is essential that the windows should be frosted or painted where necessary to prevent the direct rays of the sun from falling upon the cells. Also, it is inadvisable to have Leclanché cells in the room owing to the ammonia liberated. The cells are carried upon trays and insulators, as previously described, resting upon white pine racks, varnished or painted with acid-resisting paint, and placed so that the edges of the plates can be inspected from both sides.

The floor of the room should be of acid-proof asphalte, blue brick set in mastic cement, or if a wooden floor it should be covered with sheet lead, the various seams of

which are burned (*not* soldered) and having the edges turned up for 2 in. or 3 in. round the outsides, a suitable fillet being used to provide space for the opening of the door. In no circumstances should cells be placed in a room having a plaster ceiling.

The ideal method of connecting the cells together is by lead burning, so dispensing with bolted connections. The disadvantage is that to remove a cell entails cutting the connections. In telephone installations, where the battery is used to provide "speaking" power, the connections between the cells are invariably burnt together, but for telegraphic purposes the same need for keeping the resistance of the battery down to the lowest possible limit does not exist. The Hart Company provide a bolt and nut made of a lead alloy which is not affected by the acid spray. Other makers employ brass nuts and bolts, and trust to the layer of acid-resisting paint with which they are covered for protection.

PART II. SECONDARY CELL WORKING

Introductory. The use of a separate primary battery for each circuit is a costly method of providing the electrical energy required to work the circuits in a telegraph office of even moderate size. Considerable economy can be effected by joining several circuits to a single group of cells, and this plan is still adopted in the case of very small central battery systems. But, when the number of primary cells used in an office exceeds 300, the provision of secondary cells is generally justified, the energy required for charging purposes being obtained from the town electric light and power mains. Such an installation possesses the advantage of providing a constant and unvarying voltage to each circuit—a matter of considerable importance in the case of Wheatstone and quadruplex circuits. There is a large saving in the cost of the electrical energy as compared with primary cells and also in the space

occupied by the relatively small number of secondary cells.

The employment of a common or universal battery involves a number of changes in the connections of the circuits, and as secondary cells are capable of supplying large currents it is necessary to provide fuses to guard against the risk of fire.

Two earthed batteries, one to provide positive, and the other to provide negative, currents are required for

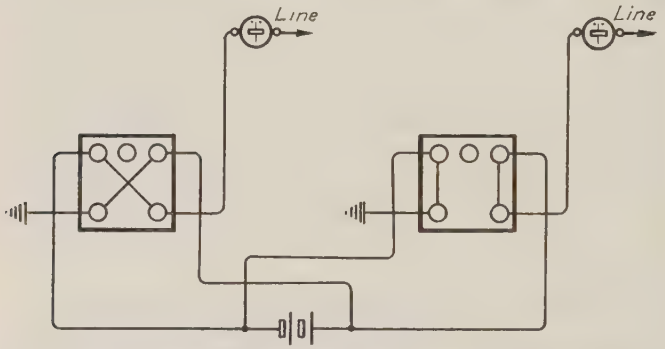

Fig. 468. Battery Short-circuited when Connected to Two Double Current Sounder Circuits

circuits which use current in both directions, i.e. for circuits worked by single needle or double plate sounder and for double current working generally. Such a circuit thus necessitates the use of twice as many cells in the universal battery as are required if the circuit is worked by a battery devoted to its exclusive use.

The necessity for separate batteries will be apparent from consideration of Fig. 468, in which two up station double current keys are joined to a single battery; for, when one of the keys is depressed as shown, neither station sends out a current owing to the battery being short-circuited by the left key earthing the positive, and the right key the negative, pole of the battery.

Had one of the stations been up and the other down, the same result occurs when both keys are either at rest or both depressed. It will also be recognized that neither can up and down single current sounder circuits be worked by the same single battery.

The sending apparatus on circuits using both directions of current is therefore modified so that one position of the key or keys joins the positive, whilst another position connects the negative, battery to line.

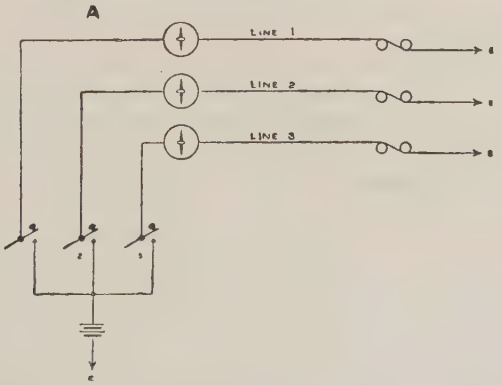

Fig. 469. Principle of Universal Battery Working

Every group of circuits working from a universal battery is, therefore, in skeleton equivalent to the three single current sounder sending circuits shown conventionally in Fig. 469, viz. to a number of circuits in parallel joined to one battery. The essential condition for satisfactory working is that, since the number of circuits over which current is flowing varies from instant to instant according to the position of the keys of the various circuits using the battery, the current in any circuit must be approximately the same (i) when it alone is taking current, and (ii) when all the circuits connected to the battery are also closed simultaneously. This condition can be obtained only when the internal

resistance of the battery is small in comparison with the joint resistance of all the circuits connected to the battery, and also when the battery is capable of supplying the full current required when all the circuits are working simultaneously. Both these conditions are fully satisfied by a secondary battery, and the size of the cell chosen depends solely on the quantity of energy required for a given period. If the cells are too small it might be necessary to charge them two or three times a day, whereas the general practice is every fourth day.

If the battery shown in Fig. 469 has negligible internal resistance the current flowing in any one of the circuits will have precisely the same value whether or not one or both the other keys are also depressed.

Theory of System. When a single primary battery is employed to work several circuits the value of the current in each varies in accordance with the number of keys which are simultaneously depressed. If this variation of current is large the working is unreliable.

If ten single current circuits each having a resistance of 1000^{ω} are connected to a single battery, having an E.M.F. of 25 volts and an internal resistance of 100^{ω}, the current flowing through each circuit when all the keys are depressed is—

$$\tfrac{1}{10} \text{ of } \frac{25}{100 + \dfrac{1000}{10}} = 12{\cdot}5 \text{ mA}$$

If but one key is depressed, the value of the current in that circuit is—

$$\frac{25}{100 + 1000} = 22{\cdot}7 \text{ mA approx.}$$

It will therefore be evident that the current in any of the circuits will vary between 12·5 mA and 22·7 mA according to the number of keys which happen to be

simultaneously depressed. This represents a variation of 55 per cent, which would, of course, render satisfactory working quite impossible.*

It will now be well to consider the battery replaced by one of the same E.M.F. but having absolutely no internal resistance. In this case the current in each circuit is always 25 mA no matter whether this is the only circuit having its key depressed or whether all the keys are simultaneously depressed.

In the latter case the joint resistance of the ten circuits is 100ω and the total current sent out by the battery is 250 mA, but this divides equally between them, thus giving 25 mA in each. When one key is depressed the resistance which the battery encounters is 1000ω and the current is therefore 25 mA as in the previous case. In other words, the circuits have

* The following formulae are frequently useful—

Let E = E.M.F. of battery.
r = internal resistance of battery.
E_1 = potential difference when all the circuits are working.
E_2 = E.M.F. lost in battery.
a = resistance of one of a number of circuits, which may be of unequal resistance, connected to the battery.
R_1 = joint resistance of all the circuits connected to the battery.
C_a = current in the circuit of $a\omega$ resistance.

$$E_1 = \frac{R_1}{r + R_1} \text{ of } E,\ E_2 = \frac{r}{r + R_1} \text{ of } E, \text{ and } C_a = \frac{E_1}{a}$$

If p = current in the circuit of $a\omega$ resistance when all the circuits are working expressed as a percentage of the current in a when it only is working—

$$p = 100 \left\{ \frac{1 + \frac{r}{a}}{1 + \frac{r}{R_1}} \right\} \text{ (i) or, } p = 100 \left\{ \frac{R + r}{R + nr} \right\} \text{ (ii)}$$

when n circuits each of equal resistance R are connected. Also,

$$n = \frac{100}{pr}(R + r) - \frac{R}{r} \text{ and } r = \frac{R(100 - p)}{pn - 100}$$

absolutely no effect upon each other, and this represents the ideal condition.

Universal Working with Primary Batteries. When primary cells are used to form a universal battery the internal resistance is of vital importance, and its value for satisfactory working must never exceed half the joint resistance of all the circuits connected to it. In general not more than five or six circuits are connected to a primary cell universal battery. Moreover, the resistances of the circuits connected should not differ

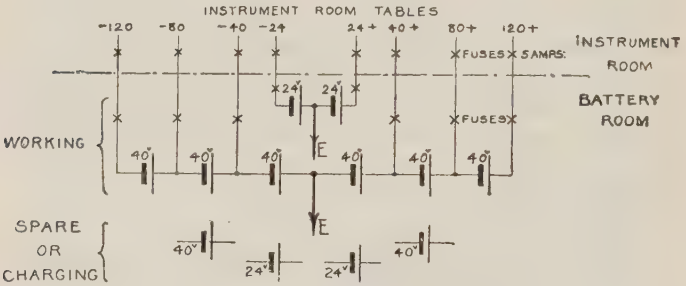

Fig. 470. Complete Installation of Secondary Cells

by more than 25 per cent. Should this case arise resistance blocks are inserted in the battery leads to the instrument. The resistance inserted should, however, only be of sufficient value to bring up the resistance of the circuit to within 25 per cent of that of the highest circuit connected.

PART III. POWER ARRANGEMENTS

The switching arrangements about to be described owe their origin to Col. Sir T. F. Purves.

Voltages Required. The values of the E.M.F.'s required to work all the circuits in a large telegraph office differ very considerably, but it has been found that practically the whole of the conditions are met by providing

four positive voltages, 24v, 40v, 80v, and 120v, and four negative, 24v, 40v, 80v, and 120v.

With the exception of small central battery systems where Leclanché No. 0 cells are used, universal battery working with primary cells is now very rare. In no case should long simplex or long duplex, quadruplex

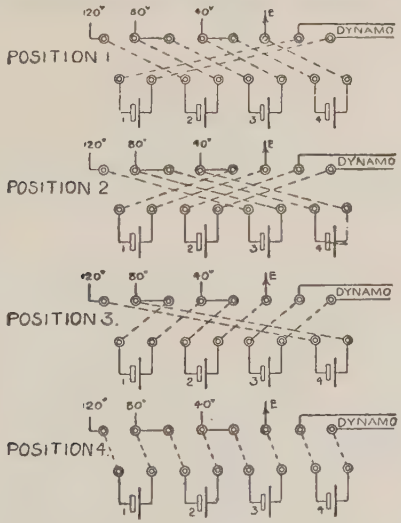

Fig. 471. Connections of Cells in each Position of the Main Switch

or high speed circuits be worked from a universal primary battery.

24-Volt Sets. The installation of secondary cells may be divided into two distinct groups, respectively termed the " main " and " 24-volt " batteries. The latter are used to work the local circuits (900ω sounders being employed) and to provide main battery power for all the sub-office or other minor circuits for which 24 volts is sufficient. Since these circuits are usually more numerous than longer ones, and the battery also provides current for all local circuits, a larger type of

cell than is employed upon the main sets is frequently required. The local circuits are divided into two approximately equal groups, one being worked by the 24^{v} positive and the other by the 24^{v} negative battery.

In order to provide for the re-charging of the cells, and also to ensure a stand-by in case of failure or accident, the battery is provided in duplicate. The

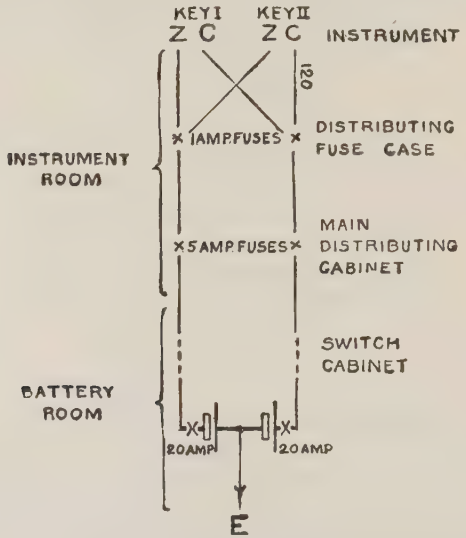

Fig. 472. General Principle of Application of Fuses

24^{v} set therefore consists of 48 cells or four groups of 12 cells, thus providing 24^{v} positive and negative and two groups spare.

Main Sets. The main battery consists of eight groups of 20 cells each, two groups of which are always spare. The complete installation is shown diagrammatically in Fig. 470. It is important to notice that the groups of cells will not be worked evenly since the last sets of cells feeding the 120^{v} lead are only called upon to supply current for the circuits requiring that E.M.F.,

whereas the inner sets supply all circuits requiring 40^{v} and, in addition, provide current for those requiring 80^{v} and 120^{v}. The groups providing 40^{v} are therefore worked more heavily than those providing 80^{v} or 120^{v}, and similarly the groups providing 80^{v} are more heavily worked than those providing 120^{v}. Hence inner cells would become discharged before the outer ones. In order to secure uniformity of output, from the different main groups of cells, a novel and interesting form of rotary switch was devised in 1902 by Col. Sir T. F. Purves, for the purpose of interchanging the positions of the groups. Each set, after being charged, supplies for the first day 40^{v}, for the second 80^{v}, for the third 120^{v}, whilst upon the fourth day it is again thrown spare for charging.

Two switches are employed, one of which deals with the positive and the other with the negative groups. Each switch has four positions corresponding with the four ways in which the cells may be joined up. The connections formed in each position of the negative switch are shown in Fig. 471. The positive switch is similarly arranged. The arrangement will be quite apparent from the comparison of Figs. 470 and 471 with the table given on page 769.

TABLE SHOWING CONNECTIONS OF THE MAIN SETS

Negative Sets					Positive Sets				
Position of Switch	No. of Set connected to				Position of Switch	No. of Set connected to			
	On Charge	120 v	80 v	40 v		40 v	80 v	120 v	On Charge
No. 1 1st day	1	2	3	4	No. 1 1st day	4	3	2	1
No. 2 2nd day	2	3	4	1	No. 2 2nd day	1	4	3	2
No. 3 3rd day	3	4	1	2	No. 3 3rd day	2	1	4	3
No. 4 4th day	4	1	2	3	No. 4 4th day	3	2	1	4

General Scheme of Fuses. The use of secondary cells entails the provision of fuses, since large currents may readily result from the presence of faults. These excessive currents may seriously injure the cells and also might quite easily produce a fire were precautions not taken to prevent the continuous passage of current of abnormal value. A 20-ampere fuse is inserted at the cells in the leads to the "switch cabinet," and 5-ampere fuses are placed in the leads at the "main distributing cabinet" in the instrument room. After passing these fuses the leads go to the various "distribution and fuse cases" upon the tables. At these points 1-ampere glass tube fuses are inserted between the main leads and the instruments themselves. Every instrument is represented by a fuse upon this case, and it is therefore impossible for a fault upon one instrument to blow a main fuse and thus temporarily stop the working of every circuit using the voltage in question. The general scheme is sufficiently indicated in Fig. 472.

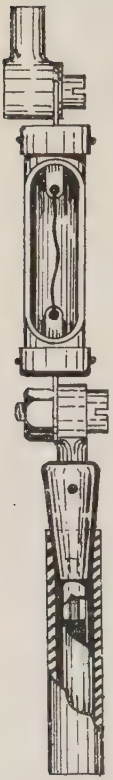

FIG. 473
METHOD OF TERMINATING CABLES AND FUSE AT THE CELL

Main Fuses at the Cells. The leads are taken from the cells to a grooved casing running along the side of the racks, but before entering the casing a fuse is inserted. This fuse consists of a circular fibre tube with a suitable slot to give access to the fuse wire, which is of silver. The cables are seven strands of No. 16 copper wire, insulated with paper, impregnated with resin oil, and covered with a seamless sheathing of lead. The cable is connected to the fuse by means of a thimble connector and a brass sleeve, the latter being soldered on

to the lead covering of the cable as illustrated in Fig. 473.

Switch Cabinet. From the cells the leads pass on to the switch cabinet, which is also placed in the battery

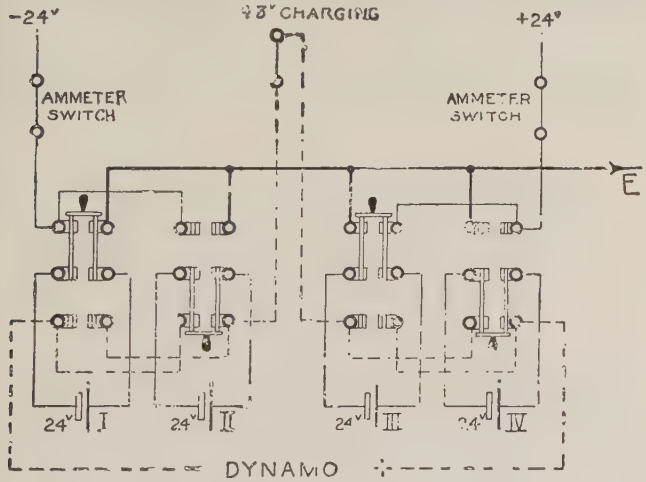

Fig. 474. 24v Battery Switches

room. Dealing with the 24-volt sets first, it will be seen (Fig. 474) that the leads pass to the centre points of four double-pole two-way switches. With the switches in the positions shown, sets 1 and 3 are connected to the 24v leads to the instrument room with the junction of the sets earthed, whilst sets 2 and 4 are connected in series to the dynamo through the 48v charging switch (Fig. 474). Sets 1 and 2, which provide the negative voltage, are interchangeable, as are the positive voltage sets 3 and 4.

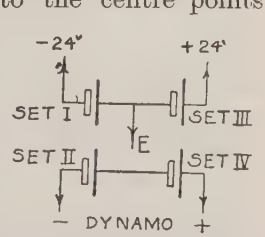

Fig. 475. Skeleton Connections of Fig. 474

Details of Positive and Negative Switches. The positive and negative main rotary switches already referred

to are of a far more complicated character, since three-fourths of the cells are working whilst the remaining fourth is spare or is being charged. Although the sequence of operations performed by the switches is complex, their manipulation is exceedingly simple and their design is such that, even while the switch handle is being moved, the power supply remains continuously connected to the instrument room. This is effected

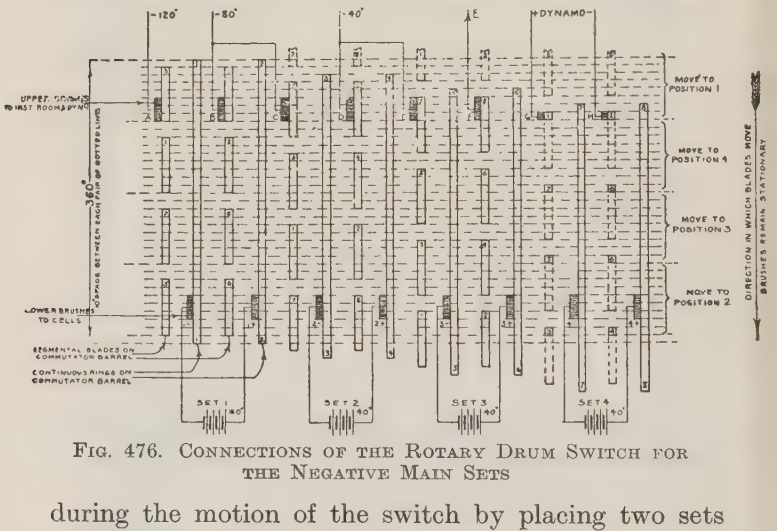

Fig. 476. Connections of the Rotary Drum Switch for the Negative Main Sets

during the motion of the switch by placing two sets in parallel on to the various main leads successively until, finally, the set of cells due to be charged is disconnected from the working circuits and is moved on to the charging leads. The connections of the positive and negative switches are identical, and the latter is illustrated diagrammatically in Fig. 476. The moving member of the switch consists of a commutator barrel upon which are placed eight continuous rings connected to eight series of segmental blades bearing similar numbers to those of the continuous rings. Upon the base of the switch are mounted two sets of eight brushes, connected as shown, making contact with the

rings and segmental blades. The commutator is revolved to make the various changes, the brushes remaining stationary. The main switches are operated by means of a removable handle (not shown in Fig. 478) upon the side of the cabinet. From Fig. 476 the various changes may readily be traced. It will be noticed that the blades and brushes connecting to the circuit of the charging dynamo are made specially narrow. This is in order that the first operation of the switch, during its traverse, shall be to disconnect the dynamo from the freshly charged set of cells, whilst its last operation is to reconnect it to the exhausted set. In order to render the arrangement quite clear, the sequence of the various changes is tabulated—

FOUR POSITIONS OF SWITCH

Position I. = 1 to *G*, 3 to *A*, 5 to *C*, and 7 to *E*				Position II. At 90° = 1 to *E*, 3 to *G*, 5 to *A*, and 7 to *C*			
First move				*Second move*			
after	10°	1 Breaks from	*G*	after	100°	3 Breaks from	*G*
,,	20°	1 Makes on	*E*	,,	110°	3 Makes on	*E*
,,	30°	7 Breaks from	*E*	,,	120°	1 Breaks from	*E*
,,	40°	7 Makes on	*C*	,,	130°	1 Makes on	*C*
,,	50°	5 Breaks from	*C*	,,	140°	7 Breaks from	*C*
,,	60°	5 Makes on	*A*	,,	150°	7 Makes on	*A*
,,	70°	3 Breaks from	*A*	,,	160°	5 Breaks from	*A*
,,	80°	3 Makes on	*G*	,,	170°	5 Makes on	G

Position III. At 180° = 1 to *C*, 3 to *E*, 5 to *G*, and 7 to *A*				Position IV. At 270° = 1 to *A*, 3 to *C*, 5 to *E*, and 7 to *G*			
Third move				*Fourth move*			
after	190°	5 Breaks from	*G*	after	280°	7 Breaks from	*G*
,,	200°	5 Makes on	*E*	,,	290°	7 Makes on	*E*
,,	210°	3 Breaks from	*E*	,,	300°	5 Breaks from	*E*
,,	220°	3 Makes on	*C*	,,	310°	5 Makes on	*C*
,,	230°	1 Breaks from	*C*	,,	320°	3 Breaks from	*C*
,,	240°	1 Makes on	*A*	,,	330°	3 Makes on	*A*
,,	250°	7 Breaks from	*A*	,,	340°	1 Breaks from	*A*
,,	260°	7 Makes on	*G*	,,	350°	1 Makes on	*G*

Main Charging Switches. The main charging switches and the general arrangement of the positive and negative main switches are shown in Fig. 477. The dotted connections between the cells and the main leads

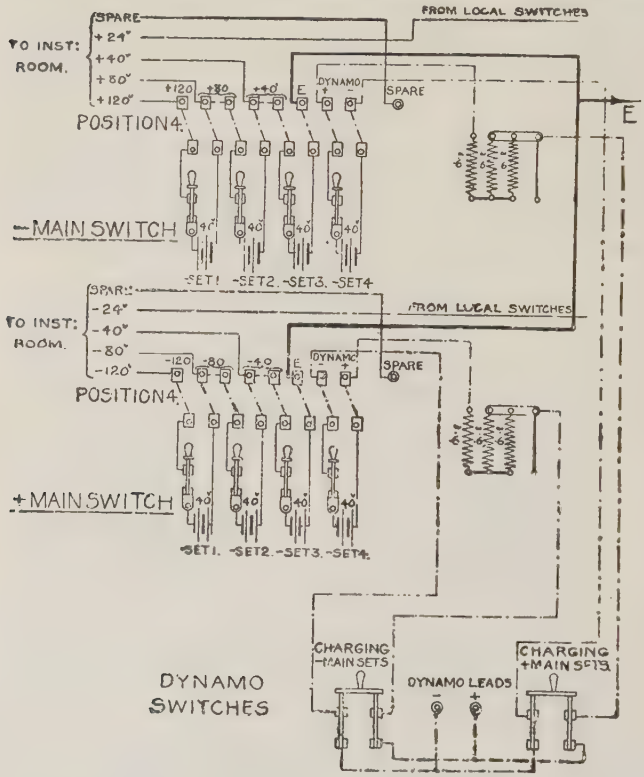

FIG. 477. MAIN CHARGING SWITCHES

to the instrument room show the main positive and negative switches each in the fourth position, but these connections are as shown in Fig. 471 if the switches occupy any one of the three other positions.

The charging leads pass through the two double-pole

switches (one for the positive and one for the negative main sets) through an adjustable resistance on to the positive and negative main switches. Finally, in series with each set of cells a single-pole switch is inserted.

The resistance mentioned is of bare wire and may be connected so as to give resistances of $\frac{2}{3}^{\omega}$, 1^{ω} and $1\frac{1}{3}^{\omega}$, and enable the 40^{v} sets to be charged in parallel with two 24^{v} sets. The object of the resistance is solely to take up the difference of 8^{v} which exists between the E.M.F.'s of the sets.

The general appearance and arrangement of the switch cabinet is indicated in Fig. 478.

Main Distributing Cabinet. From the switch cabinet the leads pass to the main distributing cabinet in the instrument room. Here the leads pass through U-links and 5-ampere fuses of the same type as those illustrated in Fig. 473, but with a finer wire. A voltmeter is also provided for testing purposes, and is placed within the cabinet behind the glass door. The general appearance and arrangement of the cabinet will readily be perceived from Fig. 479.

There is space for two additional leads beyond 120^{v}, and these voltages when required are formed by adding ordinary primary cells until the required voltage is obtained. The cases are usually so few that the provision of secondary cells is not warranted.

The cabinet illustrated provides for two separate sets of leads to the tables, and thus enables the office to be divided into two halves. In very large offices the division is sometimes carried further, and more than two tablets are provided, while for small offices but half the provision shown is required, and a single set of leads run round the whole of the instrument room.

Distribution and Fuse Case. A distribution and fuse case is provided for every three tables, and is placed upon the end of the central table, but with the front in the opposite direction to the front of the instruments. The power leads are tapped off below the floor-line,

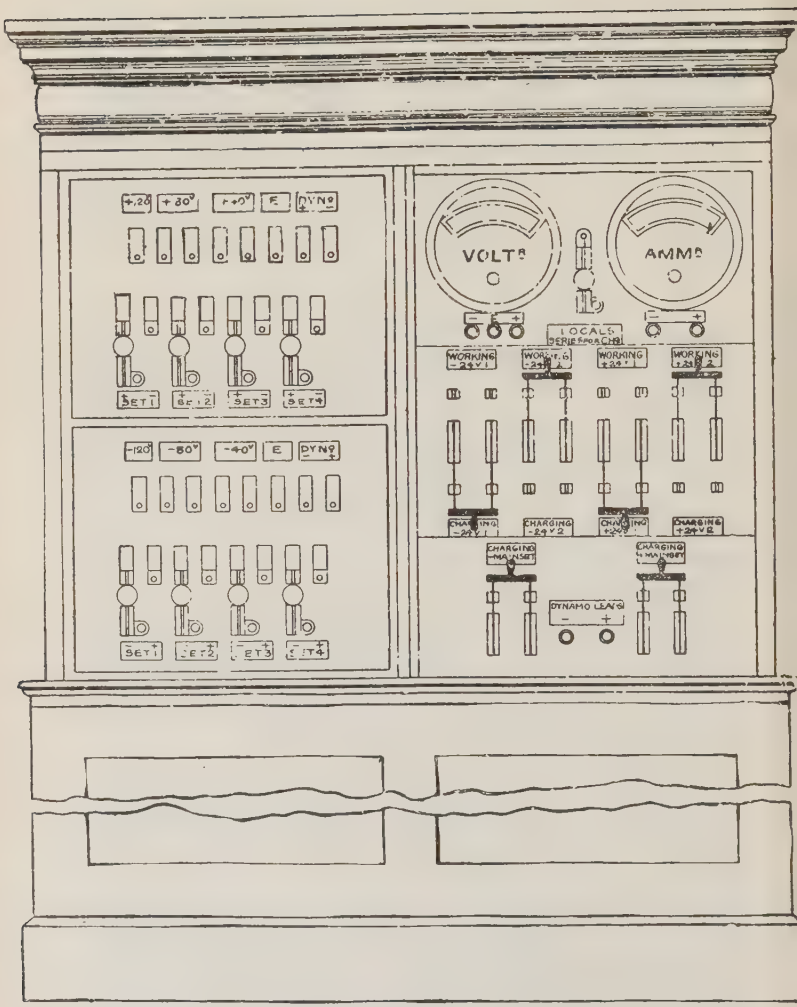

FIG. 478. SWITCH CABINET

Main Rotary Switch Panels on left; 24-volt Switches and Instruments on right

and are carried to the case in an iron troughing. The power lead is bared by removing the lead sheathing

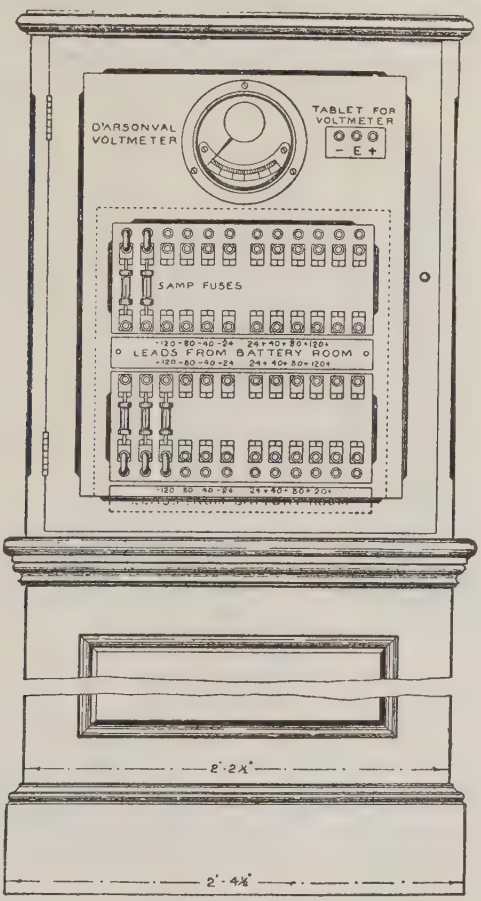

FIG. 479. MAIN DISTRIBUTING CABINET

and impregnated paper and a similarly stripped length of cable is then soldered on to the power lead; the whole is then carefully insulated and covered by a

shaped piece of lead sheet securely soldered so as to form an air-tight and water-tight joint.

The tablet (Figs. 480 and 481) provides for 80 fuses—i.e. ten for each voltage, but by altering the connecting straps which normally join the power leads through to the cut-out strips from the vertical to the horizontal position, sufficient flexibility is obtained to meet most requirements. In some cases a 100 fuse tablet has to be employed.

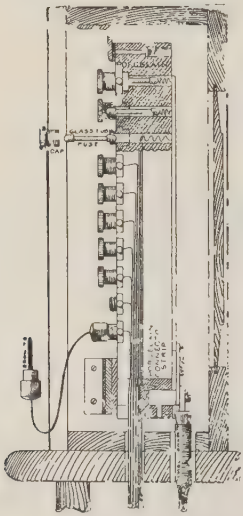

Fig. 480. Section of Distribution and Fuse Case

The base of the case is of porcelain, with suitable holes for the insertion of the fuses. The brass strip which closes the back of each hole is connected to the particular voltage supplied by that strip. Upon this strip a spiral spring (Fig. 480) is placed so as to press upon and make satisfactory contact with the end of the glass-tube fuse (see Chapter XXI), which normally rests upon it. The other end of the fuse makes contact with the inner part of the screwed brass cap which normally holds it in position. The base on to which the cap screws is connected to the instrument leads of the circuit to which it is attached, and thus a fuse is inserted in every lead from the case to the instruments. The fuses are of the usual glass-tube pattern with 2-mil wire which will carry ·5 A and fuses at 1 ampere.

Under normal conditions the fuses are not visible, and to examine them it is necessary to remove the brass cap (which at once disconnects the power from the instrument) and remove the fuse.

Special cords are used for changing the power

supplied to a circuit having a fuse cap at one end and a fuse cap fitted with an ebonite centre pin at the other. The fuse cap and fuse are removed from the circuit in question, and their place is taken by the insulator, the cap of which is screwed into position. The other end of the cord is then connected in the ordinary way

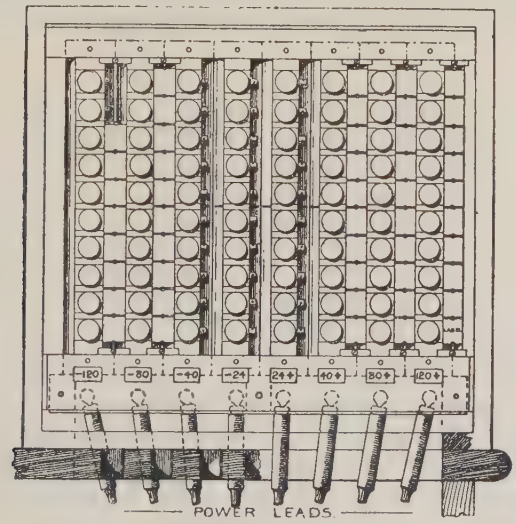

FIG. 481. FRONT VIEW OF DISTRIBUTION AND FUSE CASE

to any spare position on the voltage required, a fuse being of course inserted at this point.

Secondary Cell-working for Small Offices. The standard arrangements with the costly rotary switch cabinet cannot economically be justified at small offices, and in these cases a simplified method of secondary cell working, designed by Col. Sir T. F. Purves, is adopted.*

The principal feature of the plan consists in providing

* "New Secondary Cell System," by R. Halton, *Post Office Electrical Engineers' Journal*, Vol. III, p. 339.

only a single set of cells and in charging each group providing a voltage, separately when necessary, whilst the cells are working. Two types of tablet have been provided for fitting in the charging cabinet, one for six, and the other for eight voltages. The latter type is shown in Fig. 483, and it will be observed that the leads from each cell pass through U-links to the power-leads to the instrument room, where they are connected to

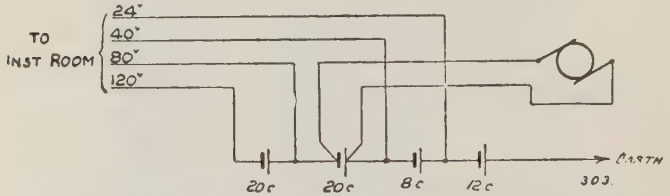

Fig. 482. Principle of Secondary Cell-working for Small Offices

distribution and fuse cases. In addition an extra pair of test holes is provided for each lead, so that the charging current may be applied to any particular group of cells by inserting a double U-link plug between the + and − dynamo test holes and the upper battery test holes. The plug is furnished with a guide pin which makes it impossible to place the plug between two groups of cells and thus produce a short-circuit. In the event of the failure of a group of cells the dynamo is inserted in their place and the U-links connecting the particular group withdrawn.

The 24-volt leads are duplicated through U-links to provide also power for telephone speaking and signalling. As the 24-volt lead is taken from the 40-volt group it is necessary to arrange for independent charging of this section, and a suitable resistance unit for taking up the excess voltage of the dynamo is provided; but if the dynamo has at any time to replace the 24-volt set its E.M.F. must be reduced to

24 volts by increasing the resistance in the field-magnet circuit.

The six-voltage tablet is similar to that just described, save that the 24-volt lead is omitted, and voltages of 40, 80, and 120 positive and negative only are provided.

The voltmeter and ammeter are employed as in the ordinary system. It may also be added that the automatic cut-out employed in the circuit of the charging

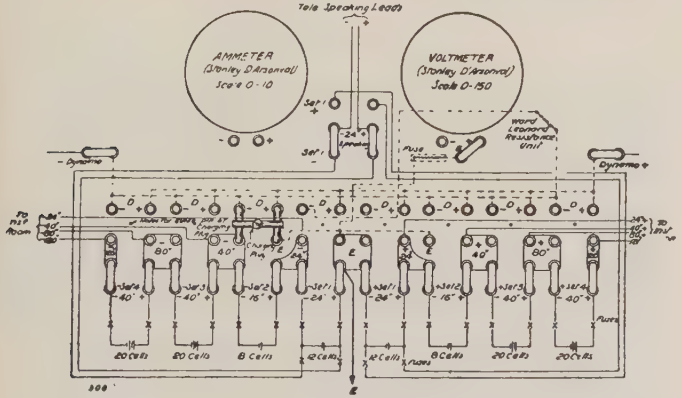

FIG. 483. SECONDARY CELL CHARGING CABINET WITH 8-VOLTAGE TABLET

dynamo and the cells is of a somewhat simpler pattern than that shown in Fig. 484.

Loop Batteries. The number of circuits worked on loops in underground cables is continually increasing. In Germany, there are now no special telegraph cables. The use of loop circuits involves separate batteries for each circuit, and for this purpose small secondary cells are used. They are connected to the circuits via U-link tablets in the battery room to the battery leads. Charging is effected from the ordinary installation by the use of pegs and cords after the fashion described on page 776.

The provision of these loop batteries can be obviated by the use of the " H " relay circuit (*q.v.*).

Charging Arrangements. Before discussing the charging arrangements it is necessary to indicate how Ohm's law may be applied to a circuit consisting of a dynamo charging a battery of secondary cells. If the opposing E.M.F. of the cells is e volts whilst E is the E.M.F. of the dynamo, and R the total resistance of the circuit, the resulting current C is obtained thus—

$$C = \frac{E - e}{R}$$

The opposing or back E.M.F. of the battery is 2·1 volts per cell at the beginning of the charge, whilst at the end it will have risen to 2·5 volts per cell.

EXAMPLE. It is required to charge 25 cells from a dynamo having an E.M.F. of 100^{v} and a resistance of ·02ω. If the charging current is to be maintained at 15 amperes, what resistance must be inserted in the circuit at the beginning and at the end of the charge? The resistance per cell is ·0015ω and the resistance of the leads ·02ω—

Internal resistance of cells .	·0015 × 25	= ·0375ω
Resistance of dynamo . .		= ·02ω
Resistance of leads, fuses, etc.		= ·02ω
Total resistance of circuit .		= ·0775ω

Back E.M.F. at beginning of charge = 2·1^{v} × 25 = 52·5^{v}
" " end " " = 2·5^{v} × 25 = 62·5^{v}

$$\text{Current} = \frac{\text{charging E.M.F.} - \text{back E.M.F.}}{\text{total resistance}}$$

or

$$= \frac{\text{effective E.M.F.}}{\text{total resistance}}$$

At the beginning of the charge, effective E.M.F. = 100^{v} − 52·5^{v} = 47·5^{v}.

$$\frac{E}{C} = R \quad \therefore \frac{47{\cdot}5}{15} = 3{\cdot}16\omega$$

Resistance to be inserted at beginning of charge
= 3·16 − ·0775ω = 3·09ω approx.

Similarly, at the end of the charge the resistance to be inserted $= 2{\cdot}45\omega$ approx.

EXAMPLE. It is required to charge two batteries of respectively 20 and 24 cells in parallel at 10 amperes each. What resistance will be required to be added to the smaller battery if the E.M.F. of the dynamo is 65^{v} ?

$$\text{Resistance of circuit of larger battery} = \frac{65 - 24 \times 2{\cdot}5}{10}$$

$$= {\cdot}5\omega$$

$$\text{Resistance of circuit of smaller battery} = \frac{65 - 20 \times 2{\cdot}5}{10}$$

$$= 1{\cdot}5\omega$$

$$\text{Additional resistance} = 1{\cdot}5 - {\cdot}5 = 1\omega.$$

This problem illustrates the calculation of the resistance required to reduce the voltage applied to the main sets (see page 771).

Provision of Charging Current. In most towns a supply of electrical energy is obtainable from the town mains, but, as the voltage required to charge the cells is about 60^{v}, direct charging from the mains is economical only in those few cases in which a continuous current supply at from 85^{v} to 115^{v} is available. In such cases a bare wire rheostat with 20 points having a total resistance of 22ω is employed to regulate the charging current. At repeater stations, which are situated in comparatively small villages, an oil-engine driving a dynamo provides both lighting and charging current.*

Usually the pressure of continuous current supply is either 200^{v} to 240^{v} or 400^{v} to 480^{v}, and in this case a motor-generator,† consisting of a motor driven from the mains coupled to a dynamo, is employed. The motor

* "Power Supply at a Repeater Station," by E. A. Lakey, *P.O. Electrical Engineers' Journal*, Vol. II, p. 198 *et seq.*, gives a detailed account of the arrangements.

† "D.C. Motors," Perren Maycock's *Electric Light and Power Distribution*, Vol. II, Chapter XI; "A.C. Motors," *ibid.*, Chap. XVII; "Starting Switches," *ibid.*, p. 74, 400; "Motor Generators," *ibid.*, pp. 383, 515, 544.

switchboard contains a double-pole switch, cut-outs, and the motor-starting switch, whilst the dynamo board carries the electro-magnetic cut-out (*q.v.*), the field resistance for regulating the voltage, a voltmeter, an ammeter for measuring the charging current, and a pair of cut-outs.

Where a special dynamo or motor generator is employed it is more economical to regulate the charging current by varying the E.M.F. of the dynamo than to insert resistance between the machine and cells. For this purpose a rheostat is placed in series with the field magnet coils of the dynamo, the introduction of resistance reducing the flux through the armature and consequently the E.M.F. generated. The excitation may be varied within fairly wide limits without seriously affecting the efficiency of the machine.

An alternating current supply may be single, two, or three phase, and in such cases a motor generator is almost invariably employed, but in exceptional cases where the cells are of small capacity a Tungar rectifier* is used. With the aid of a transformer the alternating current is reduced to the desired value. The alternating current is here rectified by thermionic diode valves of special construction.

Electro-magnetic Cut-outs. If, from any cause, the dynamo were to stop, the cells would immediately commence to discharge themselves through the machine, and serious damage to both the cells and the machine would probably result. This possibility is obviated by the use of the "electro-magnetic cut-out," which is included in the circuit between the cells and the machine. Immediately the charging current falls to zero or reverses, the cut-out breaks the main circuit. In some forms the instrument also operates when the current rises above a certain value determined by adjustment.

* "The Tungar Rectifier," by H. C. Jones, *P.O.E.E. Journal*, Vol. XIX, Part 3, October, 1926, p. 260.

The form of cut-out generally used, shown in Figs. 484 and 485, consists of an electro-magnet having two windings acting upon a movable polarized armature, mechanically attached to which is a ∩-shaped conductor normally resting above a pair of mercury cups placed in the main circuit. The armature lies within the 2000^{ω} polarizing coil P, joined directly across the cells, and its upper end is therefore of S polarity. The

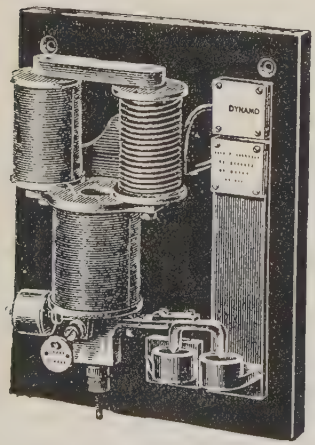

Fig. 484. Electro-magnetic Cut-out Connections

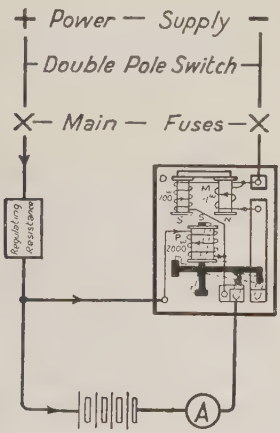

Fig. 485. Electro-magnetic Cut-out

The direction of the windings on the solenoid P is reversed

700^{ω} difference coil D wound on the left limb of the electro-magnet is energized by the current flowing from the dynamo via the cells and polarizing coil, i.e. by the current due to the difference between the E.M.F.'s of the dynamo and cells. The counter weight on the armature is adjusted so that only when the dynamo E.M.F. exceeds that of the cells by 5^{v}, the polarity induced is sufficient to repel the armature to the right and thus to complete the main circuit by means of the ∩-conductor. When this happens the main or charging

current flows through the $\cdot 1^{\omega}$ coil, and tends to hold the armature to the right. Immediately the current fails or reverses, this coil, which produces a powerful field, repels the armature and breaks the circuit.

It will therefore be seen that the device automatically cuts in the dynamo when its E.M.F. exceeds that of the cells by 5 volts, and that it breaks the circuit instantly the current reverses, due to the cells discharging back through the dynamo.

Size of Cells. The capacity (A) of the main cells is given by the following formula determined experimentally—

$$A = \frac{4C(t_1 + t_2)}{N}$$

where C = the sum of the line currents required for every circuit requiring *over* 24^{V} if worked simultaneously.

t_1 = the sum of the times (in hours) during which each double current and quadruplex circuit is worked during the busiest period of the year.

t_2 = one quarter of the sum of the times (in hours) during which all other circuits are working.

N = total number of circuits of all types requiring E.M.F.'s of over 24^{V}.

Where the number of single current circuits upon either side of the battery is unequal, provision is, of course, made on the basis of that requiring the larger current.

The capacity (A_1) of the 24^{V} cells is—

$$A_1 = \frac{3C_1t_3}{N_1}$$

where C_1 = the sum of the currents flowing if every line and local circuit upon the more heavily worked side of the 24^{V} battery is in operation.

t_3 = one quarter of the sum of the time in hours during which each circuit is used during the busiest period of the year.

N_1 = number of circuits operated from the more heavily worked side of the battery.

These formulae provide a margin of 60 per cent.

PART IV. ALTERATIONS IN THE CIRCUIT CONNECTIONS FOR UNIVERSAL BATTERY WORKING

The general principles underlying the changes which are made in the connections of the apparatus for universal battery working are of a simple and obvious character. In Part II of this Chapter it was shown that the sending circuits must be simplified to the general form illustrated in Fig. 469. Where currents in both directions are to be transmitted, the two keys or the two positions of the one key must connect either the positive or the negative earthed battery to the line. Excluding the case of intermediate offices, it will be seen that, having altered the sending portion of the key or keys to fit the new conditions, the same terminal of the set must be connected through to line in every case whether the station is up or down. For a down station this entails the reversal of the battery and the reversal of the direction in which the relay is connected. It will also be obvious that the key or keys must not connect the battery to earth.

Protective resistances are inserted in the line battery leads so that, in the event of faults arising, the resulting current may not exceed $\frac{1}{2}$ ampere ; but, in cases where the current is too large, the resistance is suitably increased above the value required for protection so as to reduce the current sent over the circuit to the value actually required. Its function is, then, primarily protective, but it may also when necessary be used to take up the surplus voltage, viz. the difference between the voltage used (24^{v}, 40^{v}, 80^{v}, or 120^{v}) and that actually necessary.

In the case of intermediate offices the key or keys must be of the same type as in ordinary working, since it is necessary to connect the negative E.M.F. to the up line, whilst the positive E.M.F. is joined to the down line, or vice versa. Since the key or keys merely effect a reversal, the same E.M.F. is necessarily connected to

both the up and to the down line. Where the resistances of these lines differ widely, artificial resistance is introduced into the shorter line in order to prevent the current sent out attaining too high a value.

These are, then, briefly the general underlying principles which govern the changes necessary, and a careful review of the above generalizations should, after reading the details of the various changes, prove of service in memorizing the general scheme.

Use of Resistances between the Fuses and Instruments. Resistance is inserted in the line battery leads to prevent heat coils, now so generally employed owing to the growth of electric tramways, from being operated through line faults and also to avoid the blowing of fuses in the distribution and fuse cases by momentary short-circuits at the instruments. These resistances amount to 2^{ω} per volt of E.M.F. used so that the maximum current due to a dead short-circuit can only be $\frac{1}{2}$ ampere. A 50^{ω} metal-cased resistance coil is placed in each 24^{v}, and an 80^{ω} coil in each 40^{v} lead, whilst a 100^{v} 16 candle-power carbon filament lamp having a resistance of about 300^{ω} when cold, is similarly inserted in the 80^{v} and 120^{v} leads.

The ordinary resistance coil is wound on a boxwood bobbin protected by an ebonite case, whereas the metal-cased resistance coils used in the battery leads are wound on a brass bobbin covered by a brass case. This construction facilitates the radiation of the heat generated by the passage of current through the coil, and whereas the ordinary coil will dissipate the heat generated by 2 watts, the metal-cased coil will dissipate 7 watts, i.e. 1·68 calories per second.*

Since the only voltages available are 24^{v}, 40^{v}, 80^{v}

* The maximum sustained current in amperes for ordinary resistance coils is $\sqrt{\frac{2}{R}}$ and for metal-cased coils $\sqrt{\frac{7}{R}}$ where R is the resistance of the coil—

$$\text{Watts} = EC = C^2R\,; \quad \text{Calories} = \cdot 24 \text{ watts} \times \text{seconds}.$$

and 120^{v}, there are many cases in which the current sent out is too high, and the value of the resistance used in the battery lead is then such as to reduce the current to the normal value. For instance, take a double current circuit consisting of the Head Office and one out-station and having a line resistance of 200$^{\omega}$. The circuit would be worked with 24^{v} and its resistance would be 510$^{\omega}$ (50$^{\omega}$ coil, two galvanometers 60$^{\omega}$, relay 200$^{\omega}$, line 200$^{\omega}$), thus giving a current of 47 mA instead of 10 to 15 mA. This latter current is produced by 24^{v} through 2400$^{\omega}$ to 1600$^{\omega}$, therefore the resistance to be inserted in each lead to the key is 460$^{\omega}$ less than these figures, i.e. between 1940$^{\omega}$ and 1140$^{\omega}$ and as resistance coils from 1000$^{\omega}$ to 2000$^{\omega}$ are provided in gradations of 250$^{\omega}$ the coil chosen would be 1500$^{\omega}$. In this case an ordinary 1500$^{\omega}$ resistance coil would replace the metal cased coil. The current could not now exceed 16 mA in the event of a dead short-circuit.

In the case of local circuits the battery lead passes through the 900$^{\omega}$ sounder to the relay, and therefore no protective resistance is required.

SINGLE CURRENT WORKING

Single Current Sounders. The internal connections of an up set (Fig. 486) are similar to those described on page 263. The positive voltage is connected through a 1 ampere fuse in the distribution and fuse case via the metal-cased resistance coil r to the front stop of the key. The local circuit is taken from the 24^{v} positive or negative, as the case may be, through the sounder to M of the relay, T of which is earthed at the table.

The down set shown on the left is given the negative voltage so that the current sent out to the up station may be in the marking direction. The connections of the relay are reversed so that a mark may be made by the up station which sends positive to line to mark. The galvanometer connections also are reversed so that

marking currents may produce a deflection to the right.

In the case of an intermediate set, shown in skeleton in Fig. 487, a 6-terminal reversing key is employed and both positive and negative voltages are required. With this key at rest, a positive current coming in on the up line passes through the relay in the direction U to D

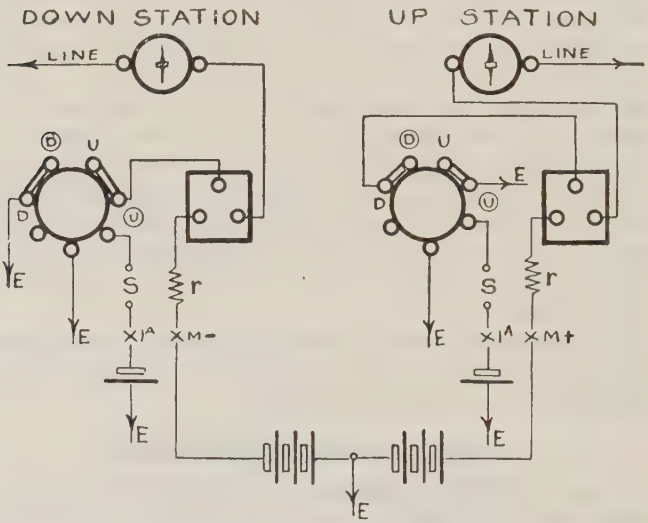

Fig. 486. Up and Down Single Current Sounders

and out on to the down line. When the key is depressed the positive voltage is joined to the down and the negative to the up line, and the currents are therefore in the correct direction to actuate the relays at the terminal stations. A second galvanometer is employed in order to indicate currents going out upon both sides.

The currents sent out on the up and down lines when their resistances differ materially are made approximately equal by increasing the resistance of one of the

metal-cased resistance coils. For example, a 50$^{\omega}$ coil would be used in the negative and a 300$^{\omega}$ coil in the positive battery lead if the down line has a resistance of 250$^{\omega}$ more than the up line. By placing the resistance in the battery lead the resistance of the circuit from each out station is not increased as would be the case were the resistances levelled up by placing a 250$^{\omega}$

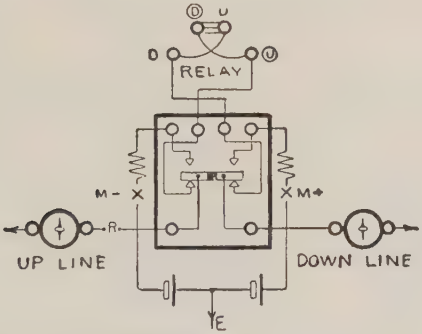

FIG. 487. SINGLE CURRENT SOUNDER INTERMEDIATE STATION

coil in the line—a course which would involve an increase in power at the out stations.

Direct sounder, and direct writer circuits are dealt with upon the same principle.

Single Current Duplex. A 9-terminal 2-position switch replaces the duplex switch shown in Fig. 151, in order that the battery resistance coil may not shunt the plain coil of the relay during simplex working. The coils of the relay and galvanometer are joined in series for duplex working, and the right coil of the galvanometer is used at simplex as in the quadruplex.

The full connections of an up set are shown in Fig. 488. For a down set, the negative voltage is joined to the key and the following connections are reversed: (i) *D* and *U*-circle; (ii) wires on upper terminals of the galvanometer; (iii) wires on lower terminals of the galvanometer.

DOUBLE CURRENT SOUNDER

Double current working may, in the case of an up station, be effected by disconnecting the front left-hand terminal of the key and joining the positive and negative voltages to *C* and *Z*. For a down station, the galvanometer, relay, and battery connections would have to be reversed, the line joined to the galvano-

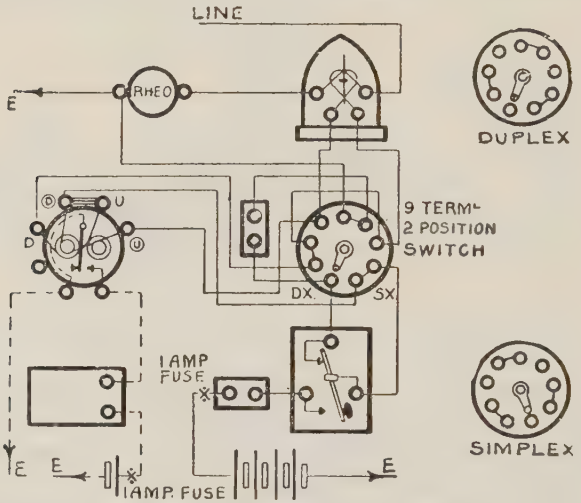

FIG. 488. SINGLE CURRENT SOUNDER DUPLEX

meter and the relay earthed, still leaving the left terminal of the key disconnected.

As double current circuits are very numerous, a special key of simple form has been designed. It is known as the " single current key with switch " (Fig. 489), and consists of a single current key with a two-way switch mounted upon the one base. The front right-hand terminal is connected to the centre of the switch and corresponds to the similar terminal of the ordinary double current key. At receive, the two front terminals are joined across, and therefore the left corresponds

to the central terminal of a double current key. Z and C are, as in every form of key, respectively upon the left and right, whilst C is connected to the front stop of the key. The skeleton connections in each position of the key are shown in Fig. 490.

Two circuits, the one an up, and the other a down station, are shown connected to a universal battery in Fig. 491. The up set calls for little comment since the connections are as in ordinary double current working, save for the substitution of the 4-terminal key. In the case of the down set the connections of the relay are reversed, as also are those of the galvanometer. The positive and negative voltages are connected to Z and C respectively, whilst the line is joined to the galvanometer. By sketching the arrangement working to an up office it may readily be shown that the alterations straighten the signals at either end, and that the reversal of the galvanometer makes the directions of the deflections the same as for an up set.

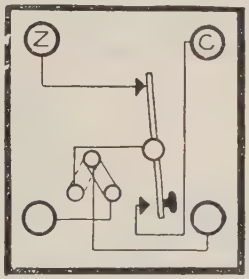

Fig. 489
Single Current Key with Switch

Fig. 490. Skeleton Connections in each Position of S.C. Key with Switch

For intermediate sets the ordinary double current key is retained, since currents have to be sent out upon both the up and the down line. Where the up and down lines differ greatly in resistance, a suitable resistance coil is inserted between the relay and the left side of the key, as shown in Fig. 492. In this way the resistance of the up is made equal to that of the down line. Where the conditions are reversed, i.e. where the down line has the lower resistance, the

battery and the relay are each reversed, as also are the positions of the up and down lines.

The balancing resistance is not included in the path of the currents received from the terminal stations, and their respective battery powers are not, therefore, increased when changing from separate to universal battery working. By the aid of Fig. 492, which shows

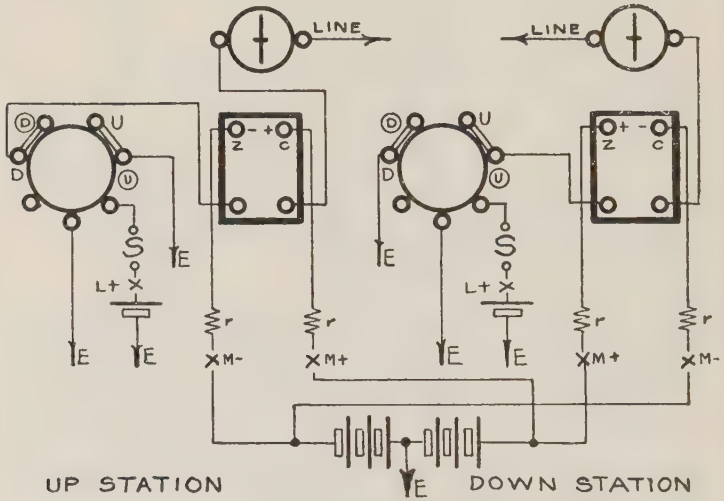

Fig. 491. Up and Down Double Current Sounders

the terminal, as well as the intermediate stations, the conditions stated may readily be verified.

Double Current Duplex. The arrangements necessary for duplex working, although somewhat different from those previously considered (see Fig. 152), are by no means complex. A single current key with switch takes the place of the ordinary double current key and the separate coils of the galvanometer are placed in series with those of the relay, since the " double split " cannot be employed. The skeleton connections of a

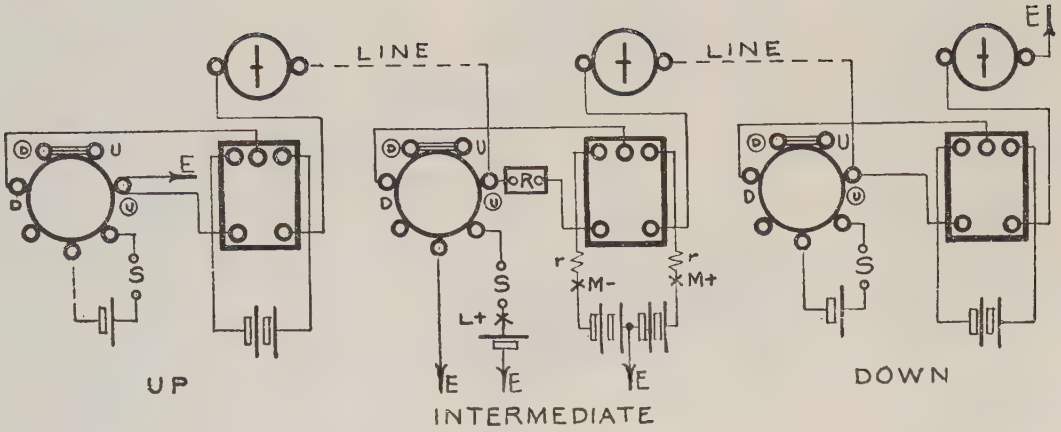

Fig. 492. Double Current Sounder Circuit, with Intermediate Station

duplex station working to a down station of the ordinary type are shown in Fig. 493.

In the normal position, with both keys at rest, the path of the current is from the positive pole of the universal battery to earth, in at the down station galvanometer, through the battery, through the line coil of the relay (D-circle to U-circle) to line, through the

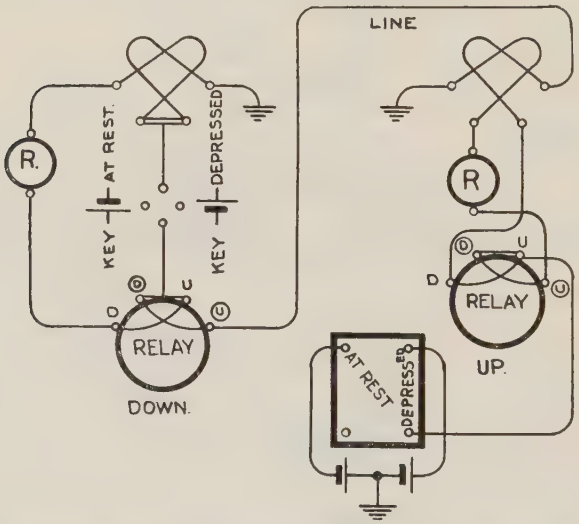

Fig. 493. Principle of Double Current Duplex Working with Universal Battery

right-hand coil of the home galvanometer, through the relay (plain coil D to U) back to the battery. The current in this circuit is twice as great as that in each of the compensation circuits, and the preponderating current therefore produces a space at both ends. If both keys are down the current is throughout reversed in direction, and a mark is therefore registered at each end. When one key only is depressed the batteries oppose, and the compensation circuits are left free to

produce a space at the end where the key is down, and a mark at the station where it is at rest.

The single current key produces a disconnection when moving from the normal to the depressed position, or vice versa. The condition is of momentary duration only, and no evil effects result. The point was, however, fully considered in relation to ordinary

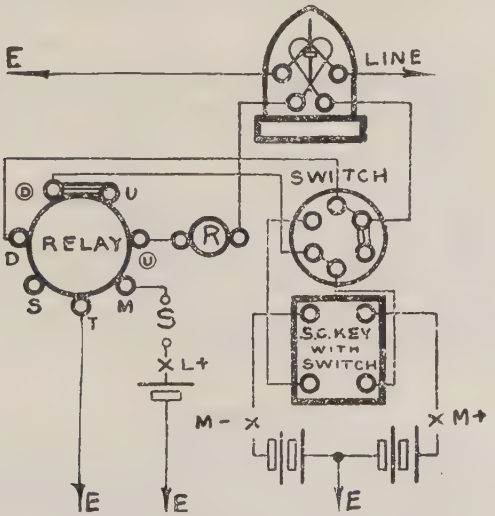

Fig. 494. Connections of Double Current Sounder Duplex: Up Station

single current working (*vide* page 282), and no further comment should be necessary.

The connections of an up station are shown in Fig. 494. The skeleton duplex connections have already been dealt with (Fig. 493), and it therefore remains to indicate how they are altered for simplex working. When the switch is turned to the simplex position, the split wire is disconnected, the left-hand terminal of the key is connected to *D* of the relay, and the line is connected through the right-hand coil of the galvanometer

to the front right-hand terminal of the key. The path of a received spacing current is through the line coil of the galvanometer, via the strapped terminals of the duplex switch, through the key, relay, rheostat and left coil of the galvanometer. Since the rheostat is in circuit at simplex, care should be taken to see that no resistance is left in it. The currents sent out pass to line through the right-hand coil of the galvanometer only.

For simplicity, a rheostat only has been shown (Fig. 494) in the compensation circuit, but where the line is of sufficient length, a condenser, condenser coils, and retardation coils are, of course, added as in ordinary duplex working.

The figure shows the connection for an up station. At a down station (i) D and U-circle are reversed, (ii) positive and negative voltages are respectively connected to Z and C, (iii) the wires on the two upper terminals of the galvanometer are reversed, and (iv) the wires on the two lower terminals of the galvanometer are reversed.

WHEATSTONE

It is essential that the transmitter shall not connect either voltage direct to earth, and accordingly the two upper contact points are withdrawn from the reach of the divided lever, as indicated in Fig. 495.

The connections of a full Wheatstone circuit are shown in Fig. 496, and call for but little comment. With the transmitter running, currents are sent to line from D. At rest, the positive and negative voltages are joined to C and Z of the key, and its currents pass to line through K and D. The U terminal of the transmitter is unconnected. The remaining portions of the circuit are apparent.

For a down station the connections of D-circle and U and those of the galvanometer are reversed, whilst the battery is reversed at Z and C of the transmitter.

A lamp is inserted in each battery lead as a protective resistance; it also prevents sparking.

Special Circuits. In every large office there is a number of Wheatstone sets which are used only for "special" work, such as race meetings and other special events; also a number of circuits which only require to work Wheatstone occasionally, or which need it during certain hours of the day, are fitted so that they may be used for special work. All these circuits are fitted with transmitters and receivers, and provision is also made

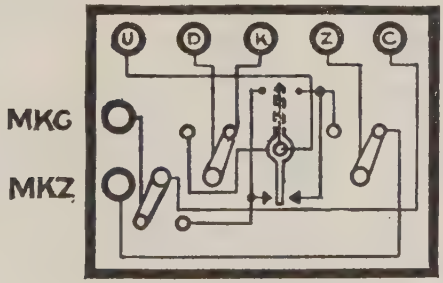

FIG. 495. WHEATSTONE TRANSMITTER WITH UPPER CONTACTS REMOVED

for intermediate working if required. As the sets may be required to work as up or down, and as the shorter line in intermediate working may be either an up or a down line, a reversing switch is added, so that the requisite changes may be made at the instrument. The difference between the resistances of the up and down sides in intermediate working, of course, varies with the lines connected, and therefore the balancing resistance is adjustable—it is, in fact, a set of condenser coils (Fig. 27). The second galvanometer is in circuit with the adjusting resistance, and registers the current sent out on the other line when the set is used as an intermediate station.

The connections of a special set are shown in Fig. 497. The test-box arrangements are described in Chapter

XXI, and it will, therefore, only be necessary to remark that the line passes through the line and instrument jacks to the galvanometer, and that the " intermediate return " jack is used for the connection of the second line when working intermediate. This line is always the shorter, or line of lower resistance.

The reversing switch is of the " peg " form, and consists of eight springs corresponding to the eight terminals. The peg also carries eight springs, four upon either side of the ebonite handle which supports them.

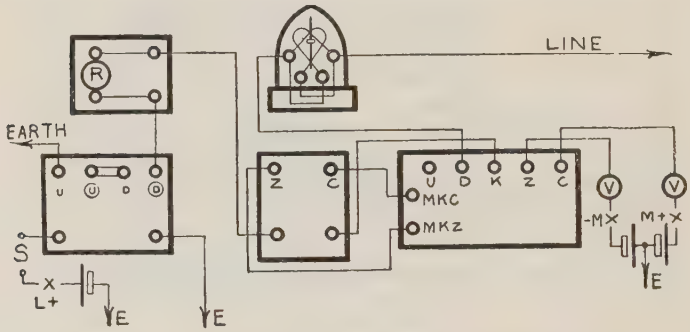

Fig. 496. Full Wheatstone Set for a Terminal Station

These springs are connected together, as indicated by the dotted lines in Fig. 497, and therefore reversing the peg connects the four top terminals horizontally and the lower four vertically. The four upper terminals control the reversal of the receiver, and the lower set the reversal of the battery.

On all new sets the peg switch is replaced by a key of the telephone type. It is known as a " switch spare set reversing Type 2," and consists of two sets each of six springs both arranged as in the upper part of Fig. 498. When the handle is moved to the left as shown, the battery connections and the receiver connections are each reversed.

When used as a terminal station there is no line

connected to the intermediate return jack, and consequently, *U* of the transmitter and the left terminal of the double current key and the second galvanometer are disconnected. The arrangement is then identical with that of Fig. 496, save that the double current key does duty for the single current key with switch. The

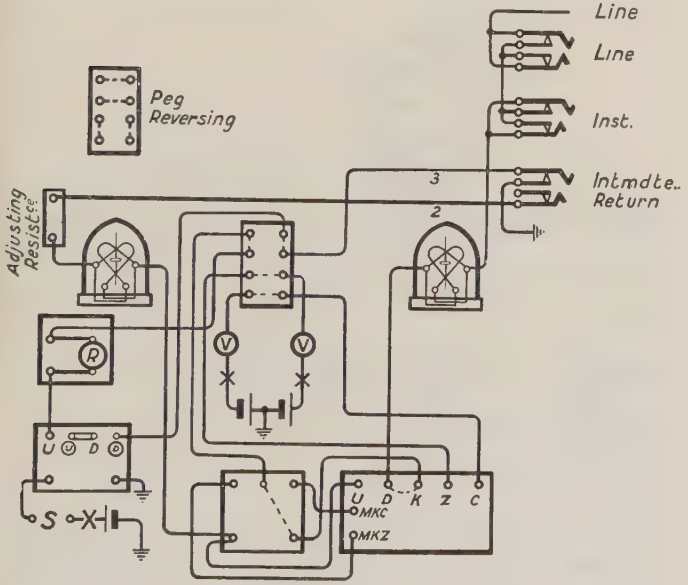

FIG. 497. WHEATSTONE SPECIAL SET FOR UP, DOWN, OR INTERMEDIATE WHEATSTONE WORKING

Peg switch connections for working as a down station to the long lines

reversing switch is used to alter the set to up or down as may be required when any new circuit is connected to it.

When the set is required for intermediate working the shorter line is connected to the "intermediate return" jack by means of solid plugs and cords. The insertion of the plug cuts away the earth connection,

and bunches the wires from the adjusting resistance and the receiver (via the switch) to the short line.

The second galvanometer, which is in series with the adjusting resistance, enables the current sent out on the short line to be cut down to the requisite value. In general, a rough equality of deflection on the two

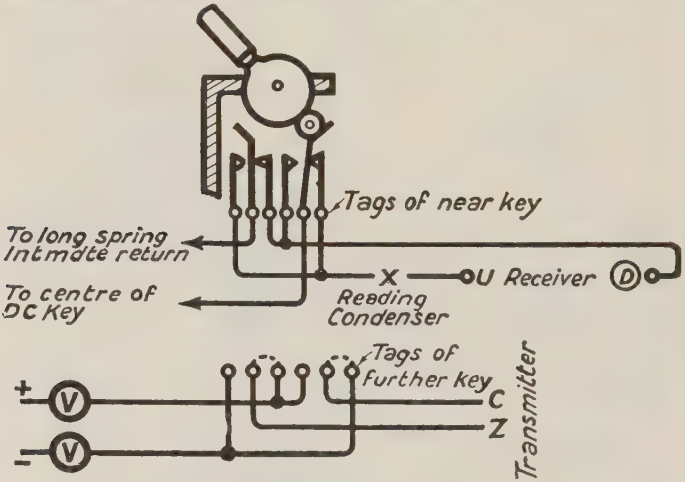

Fig. 498. Spare Set Reversing Switch Type 2

galvanometers is taken as the guide to the resistance necessary.

The received currents pass from the long line, through the galvanometer, through D and K, through the receiver and shunted condenser out on to the short line. The adjusting resistance does not form part of the received circuit. Transmitter currents pass out between U and D of the transmitter, and the adjusting resistance and second galvanometer are included in the circuit of the shorter line. The key currents pass through D and K of the transmitter and the adjusting resistance.

Wheatstone Duplex for Special Sets. The connections of a special set arranged for duplex, simplex,

terminal, and intermediate working are shown in Fig. 499. The battery switch normally connects the positive and negative voltages to the peg switch, which is arranged as in simplex working, i.e. it serves to reverse the battery and to reverse the relay terminals. The battery switch in the " resistance " position joins both

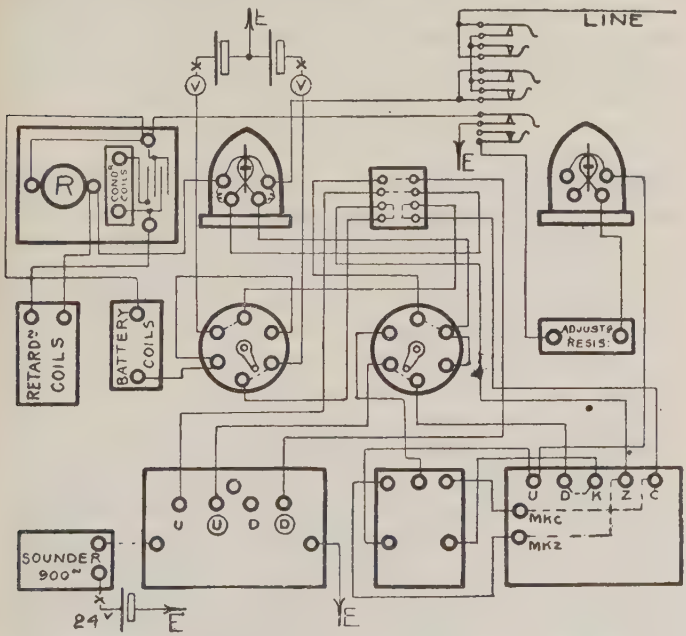

FIG. 499. WHEATSTONE SPECIAL SET FOR DUPLEX OR SIMPLEX TERMINAL OR INTERMEDIATE WORKING

Peg switch connections for working as an up station to the long line

Z and C of the transmitter through the battery coils, one side of which is permanently earth-connected. The duplex switch is arranged as in Fig. 494, and by comparing the latter with Fig. 499 there should be no difficulty in tracing the arrangement through. It will also be observed that a second galvanometer is added for intermediate working.

Wheatstone Duplex (Differential System). In this case the transmitter is added precisely as in Fig., 496, and *D* of the transmitter is joined to the lower terminal of the duplex switch. The receiver takes the place of the relay shown in Fig. 494, and the battery switch is arranged as in the "special set" duplex (Fig. 499). A reversing switch is not provided. The single current key with switch is, of course, used in place of the double current key, and the upper contacts of the divided lever in the transmitter are withdrawn. The working out of the full connections should now prove quite simple.*

Wheatstone Duplex (Bridge System). The positive and negative voltages are joined to a 6-terminal 2-position switch just as in the special set duplex, and the single current key with switch and the transmitter are connected as in Fig. 496. The top left-hand terminal of the 9-terminal duplex switch is taken to the left terminal of the single current key and the *U* terminal of the transmitter is left disconnected. The remainder of the connections are as in Fig. 277.†

The H Relay Circuit. This circuit was devised to enable loop circuits to be worked from the ordinary secondary cell installation, i.e. with earthed batteries instead of an individual battery for each metallic circuit. The "H" relay is a Post Office standard relay with a double set of differential windings each $65^{\omega} + 65^{\omega}$. In addition to the double differential winding, there are $100^{\omega} + 100^{\omega}$ vibrating coils, so that the Gulstad principle (*q.v.*) may be used. The galvanometer also is similarly wound with four 38^{ω} coils and is known as a galvanometer 2A.

The principle is shown in Fig. 500. All the signals pass over the *A* line which is used as an ordinary single-line earthed circuit. Any inductive interference as

* *Technical Instructions.* V: "The Wheatstone Telegraph System," Fig. 59.

† *Ibid.*, Fig. 68.

from an adjoining circuit in the same cable affects the *A* and *B* wires of the loop equally, and the equal currents induced pass through the line coils connected to the *A* and *B* lines to earth. They balance and consequently the relay is unaffected.

The duplex balance, however, presents some difficulty since the compensation current passes through the *B* line compensation coils of the galvanometer and relay, which necessitates the reduction of the current in the compensation to half that in the line circuit.

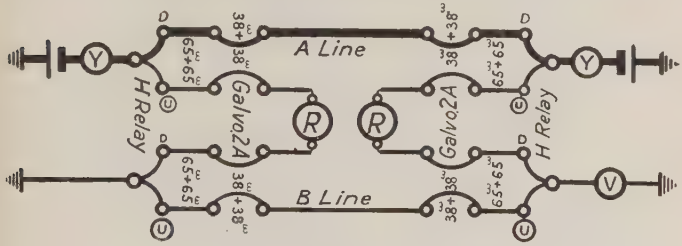

Fig. 500. The "H" Relay Circuit

Hence, the balance can only be effected by the passage of working signals. A Wheatstone receiver joined in the local circuit of the relay is a convenient adjunct to balancing. The compensation circuit contains condensers with timing resistances; the vibrating circuit is also arranged in the usual manner.

The circuit is worked on the opposition duplex method, and as shown in the skeleton diagram the keys at both stations are at rest and both compensation circuits produce a spacing effect on the relays.

The "H" relay circuit may be used not only for Morse or Wheatstone working but for Baudot or other telegraph systems.

QUADRUPLEX

The only feature which is special to the universal battery worked quadruplex is the arrangement of the

sending circuit. A 6-terminal reversing key and a double current key with adjustable contacts are used as the *B* and *A* keys respectively and are connected as shown in Fig. 501. The negative and positive lower voltages are connected through fuses and 300$^{\omega}$ metal-cased resistance coils to the lower springs, and the positive and negative higher voltages through fuses and lamps to the upper springs, of the *B* key.

It will thus be recognized that the *B* key when at

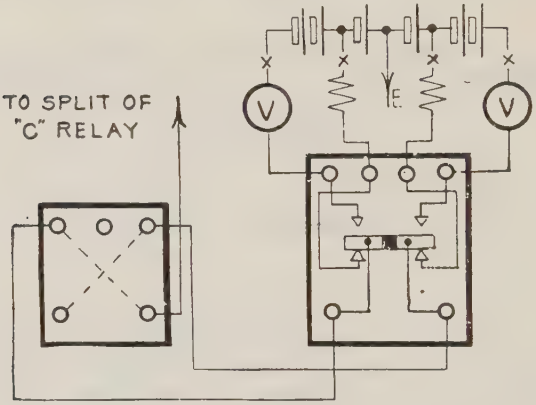

Fig. 501. Connection of Keys in Quadruplex

rest connects the negative and positive lower voltages, and when depressed the negative and positive higher voltages through to *Z* and *C* of the *A* key, which according to its position selects the negative or positive voltage.

If the connections of the keys in Fig. 177 are modified to those of Fig. 501, the connections of the universal battery worked quadruplex, shown in full in Fig. 502, are obtained.

The resistances of the lamps, metal-cased resistance coils, and the earthing resistance in connection with the two-way switch are each approximately 300$^{\omega}$.

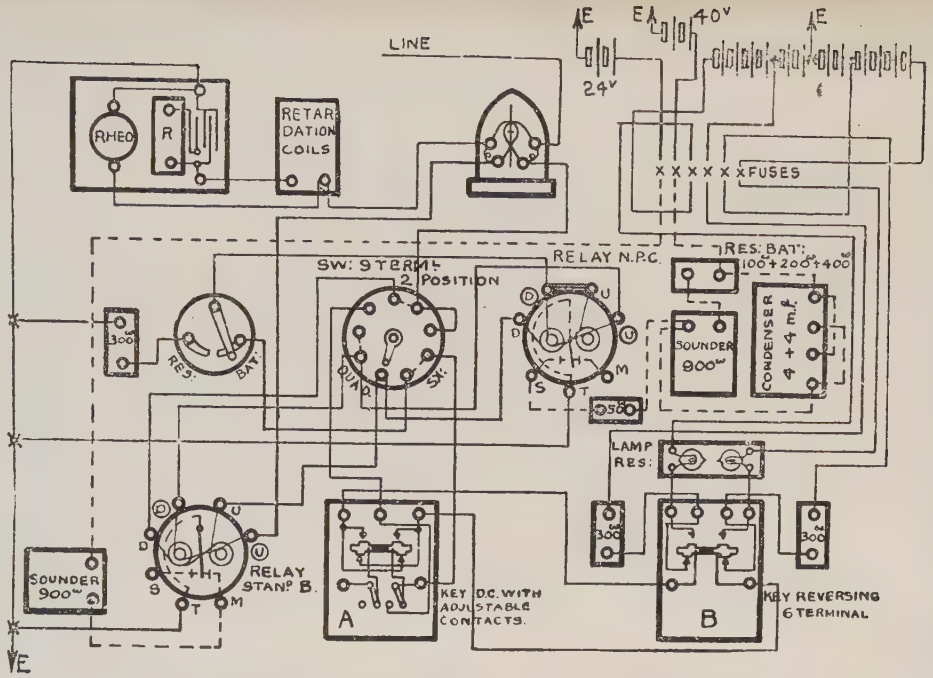

FIG. 502. QUADRUPLEX UP STATION (UNIVERSAL BATTERY SYSTEM)

If the apparatus is required to work as a down station the wires on D and U-circle of the A side relay, those upon the upper and those upon the lower

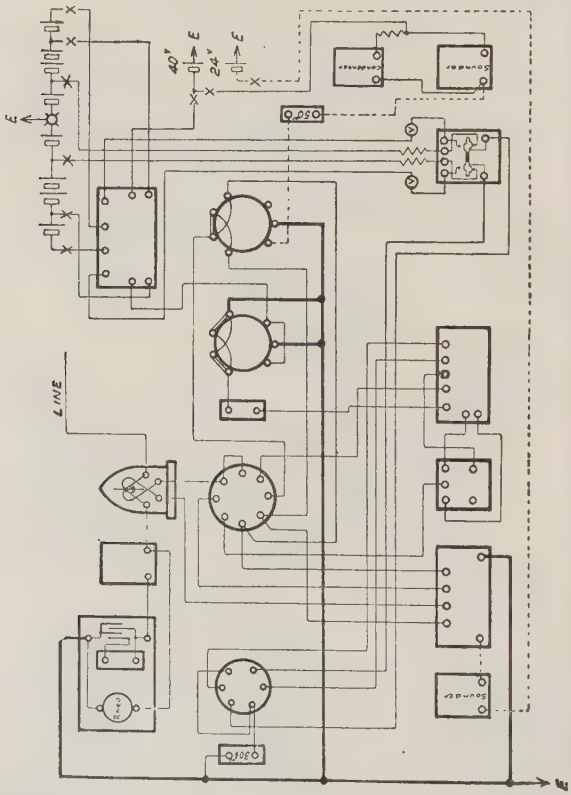

FIG. 503. CONNECTIONS OF QUADRUPLEX WITH WHEATSTONE ON THE A SIDE

terminals of the galvanometer, and the battery wires on the A key must each be reversed.

The full connections of a quadruplex with Wheatstone on the A side and incrementing voltages are shown in Fig. 503. The function of the incrementing voltages is to increase the working margin on the B side and also to make up for the comparatively high

resistance offered by the transmitter contacts when worked at high speed. The increased voltage is designed automatically to raise the ratio of the A and B currents

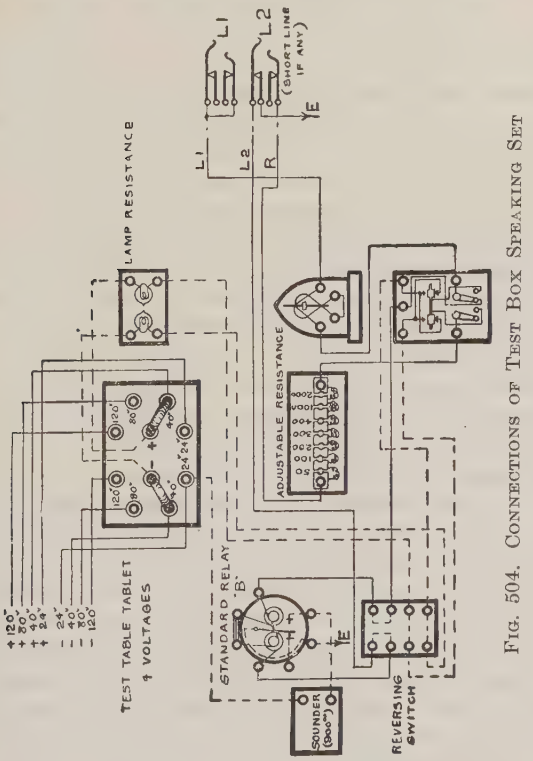

Fig. 504. Connections of Test Box Speaking Set

from 1 : 3 to 1 : 4 when the transmitter is running. For this purpose an automatic switch (*vide* Chap. XVIII) and the earthed neutral relay are joined through a 3000$^{\omega}$ resistance coil to U of the transmitter. When the transmitter is running, the lower half of the divided lever sends currents through the neutral relay, the local circuit of which closes the automatic switch, thus increasing the voltage.

This arrangement is not necessary in every case, and the ordinary connections for Wheatstone on the *A* side are obtained by eliminating the incrementing devices.

The connections of the transmitter and of the receiver which replaces the *A* relay are sufficiently obvious.*

At a down office the wires on *U* and *D*-circle of the receiver, the wires on the upper and on the lower terminals of the galvanometer, and the wires on the front of the *B* key are each reversed.

The use of the electro-magnetic switch may be avoided by connecting the full voltage to *Z* and *C* of the transmitter and interposing an opposing primary battery between *MKZ* and *Z*, and between *MKZ* and *C*, of the key, but this course is open to serious objection in a large office. The use of dry cells placed in or beneath instrument tables, with the necessity for frequent tests to ascertain their condition, cannot be recommended.

Power Leads. The provision and maintenance of the primary batteries required for working a long circuit in close proximity to a secondary cell installation is much more costly than the use of power leads. In such cases, as, for example, a newspaper office in a large town, the voltages required are taken from a distribution and fuse case by wires in an underground cable to the renter's office. 40^{v} is used for the 900^{ω} sounder local with a 700^{ω} resistance coil inserted to reduce the current to the required value, thus the use of a 24^{v} lead in addition to the main voltage is unnecessary.

Test Box Speaking Set. The only feature of the arrangement which is not common to an ordinary double current set with facilities for intermediate working is that any of the voltages from 24^{v} to 120^{v} may be connected to it according to the positions of the two U-links (Fig. 504).

* *Connections of Telegraphic Apparatus and Circuits, G.P.O.*, plate 72.

CHAPTER XVIII

REPEATERS

The speed at which long circuits having large values of capacity and resistance can be worked with a given type of apparatus is limited; but, if a repeater is inserted in the line the speed is increased to the speed at which the longer section can be worked. Moreover, the reliability of the working is improved since there will usually be a considerable difference between the highest possible speed and that actually required. In general, the speed* is proportional to the product of the total capacity and total resistance of the line. By placing a repeater in the centre of the KR of the circuit the limit of speed at which each half could be worked is quadrupled.

Single-current Simplex Repeater. The principle is illustrated in Fig. 505. The lines pass through the tongues of the relays to the working coils. When the key at the left is depressed, the right-hand relay is actuated and applies battery to the line on the right. Similarly, the key on the right operates the left-hand relay which sends out current from the battery at the Repeater. In effect, the armatures of the electro-magnets act in precisely similar fashion to the keys, and perform the operation of substituting a battery for the receiving apparatus when the armature descends.

By substituting Post Office standard relays for the simple electro-magnet relays shown, the essential principle of the Hughes Repeater (*q.v.*) is obtained.

Principle of D.C. Simplex Repeater. The general principle of a simplex repeater is illustrated in Figs. 506 and 507. The former figure indicates the arrangement required to enable an "up" to signal to a

* See Appendix A: Speed of Working and Factors of Safety.

" down " station, whilst the second figure shows a down sending to an up station.

The " up " line is joined through a relay to earth, and the tongue of this relay is connected to the " down " line, while positive and negative voltages are connected to the M and S terminals of the relay. The tongue of the relay is maintained against S by the spacing current from the up station, and a negative current from the S battery therefore passes to the down station. When

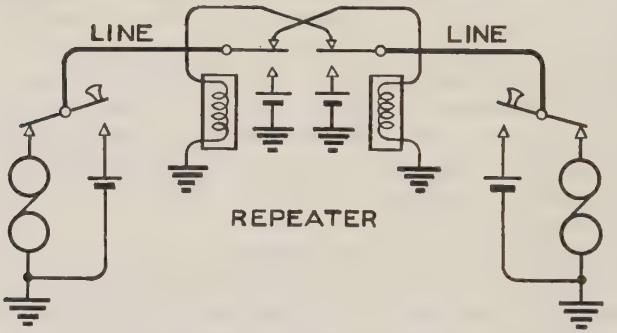

Fig. 505. Principle of Single Current Simplex Repeater

the up station depresses his key the tongue of the relay moves over to M, so transmitting a positive current to the down station, where it produces a mark.

In Fig. 507 the down line is terminated through a relay and the up line connected to T. It will be observed that the down line is joined to the down side of the relay and that the battery connections are reversed to those of the previous figure. A down station with the key depressed sends out a negative current to line. This current causes the relay to mark and so transmit a negative current to the up station.

In practice it is necessary to arrange that the terminal stations may work together in either direction. Since the relays are of the ordinary Post Office pattern,

it will be seen that (Fig. 506) even where there is no current passing through the up relay from the up line,

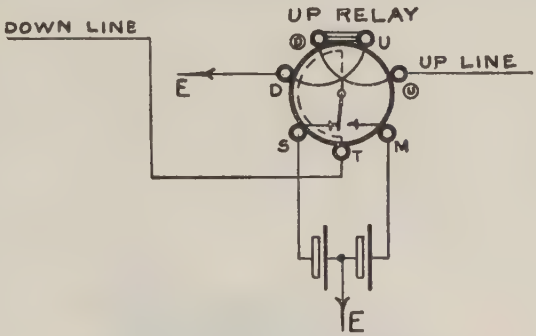

Fig. 506. Principle of Simplex Repeater
Up-station sending

there will still be a current on the down line, its direction being either " spacing " or " marking " according to whether the relay has a spacing or a marking bias,

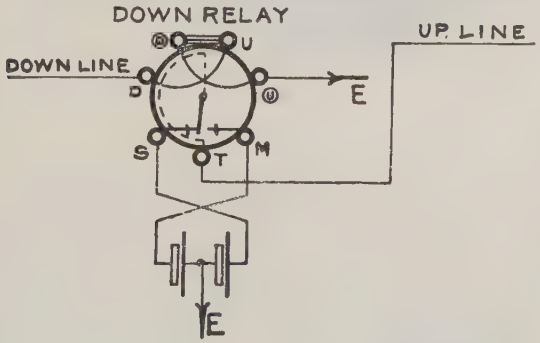

Fig. 507. Principle of Simplex Repeater
Down-station sending

or, if the relay be of neutral adjustment, whether the tongue was left on the spacing or marking side by the current last sent through the relay. Similar remarks apply with equal force to the down side (Fig. 507).

It is therefore necessary to provide an automatic device which will establish the conditions shown in Fig. 506 when the up station turns his switch to "send," and those of Fig. 507 when the down station's switch is turned. This requirement is met by the use of two automatic switches controlled by two neutral relays, which are respectively inserted in the up and down lines, in series with the transmitting relays.

Electro-magnetic Switch. The appearance of the electro-magnetic switch or, as it is generally termed, the

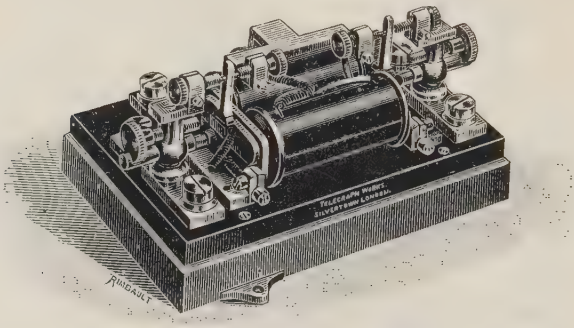

FIG. 508. ELECTRO-MAGNETIC SWITCH

auto-switch is shown by Fig. 508 ; its connections are apparent from Fig. 509. This switch consists of an electro-magnet with two armatures, each of which plays between two contact points. When energized, the armatures are attracted, and the levers make contact with the inner stops. The coils are shunted by a non-inductive resistance equal in value to the resistance of the coils. The purpose of this shunt is to cause the switch to be slow to release its armatures when the operating current is stopped. Immediately the current is cut off, the E.M.F. due to the inductance of the coils produces a current through the coils and shunt. This current continues to hold up the armatures during its

existence. As the resistance of the shunt is equal to that of the coils, the best conditions for the production of a prolonged effect have been provided. For secondary batteries the coils and shunt are each 1,000ω giving a joint resistance of 500ω, and the local voltage is 24.

Simplex Repeater. A galvanometer of the differential pattern, with its coils in parallel, is included in each

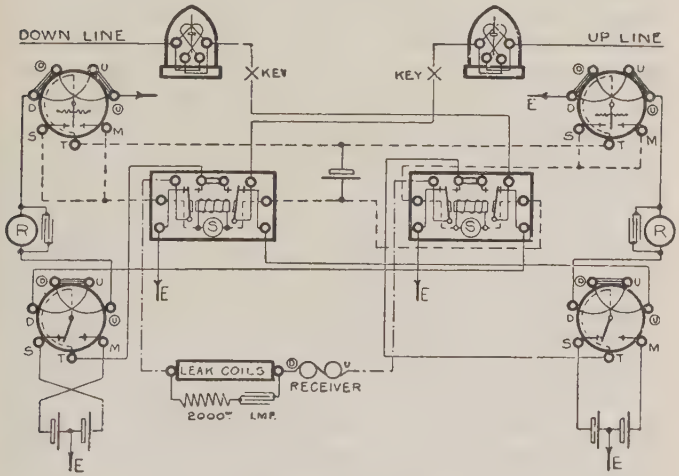

FIG. 509. SKELETON CONNECTIONS OF FAST-SPEED SIMPLEX REPEATER

line. In order to provide for communications between the repeater and terminal stations each line passes through the two lower terminals of a single current key with switch, the battery power being obtained by teeing the main batteries upon either side to the *Z* and *C* terminals of the keys.

In the sketch of the connections (Fig. 509) it will be observed that a shunted condenser is placed in series with the two relays upon either side of the repeater. Its function is, as in ordinary Wheatstone working, to

hasten the formation and to prevent prolongation of the signals.

A Wheatstone receiver, with a sounder and battery connected to the local circuit, together with an adjustable resistance and shunted condenser device, is provided for observing the signals sent out by the transmitting relays.

The local circuit through the auto-switch is normally disconnected, owing to the central position of the relay tongue, but it is completed when the tongue moves over to either S or M. If now a series of signals pass through the neutral relay, the tongue will move from side to side in accordance with them. Since the auto-switch has been made sluggish in action by the addition of the shunt, the momentary disconnections which take place while the tongue is travelling from S to M, or vice versa, are not of sufficient duration for the armatures to be released. Hence, it remains closed so long as currents are passing through the auto-relay.

The relays, galvanometer, key, auto-switch, and shunted condenser, are termed " Up " or " Down " according to whether they are in connection with the up or down lines. The " Up " battery sends currents to the " Down " station, and the " Down " battery to the " Up " station. The neutral relays are invariably termed " auto " relays in contradistinction to the " transmitting " relays.

Path of Current. When the down station turns his switch a positive current passes along the line to the repeater station, where it passes through the down galvanometer, through the back stop of the up auto, and thence through the down transmitting relay, shunted condenser and down auto-relay to earth. The down auto-relay closes the auto-switch, which connects T of the down transmitting relay to the up line. As the current from the down station passes through the relays in the direction D to U, a positive current is sent out through the contacts of the down

auto-switch and through the up galvanometer to the up line. A series of signals causes both the down relay tongues to move in accordance with those signals, and, as the momentary disconnection of the auto local circuit does not release the armatures, the signals are accurately transmitted to the up station.

If the down station turns his switch to receive and the up station commences to send, the latter's current passes through the up galvanometer and up relays to earth. The local circuit of the up auto is closed and the up transmitting relay consequently repeats the signals received to the down station.

Inspection of the figure will show that the receiver and leak coils are connected to the up or down line according to whether the repeated signals are being sent out on the up or the down line. The receiver, therefore, serves for observing the character and condition of the marks leaving the repeater station. The adjustable resistance coils in series with the receiver have a total resistance of 20,000ω, and by this means the current through the leak circuit may be regulated. The resistance of the leak circuit has but little effect upon the value of the current received at the terminal stations. On a circuit of 5000ω resistance with a battery resistance of 500ω, the current received is reduced by less than 6 per cent when the leak circuit resistance is reduced from 20,000ω to 5000ω.

A 1 m.f. condenser is placed in series with a 2000ω resistance coil, and the combination joined across the terminals of the leak coils, in order to balance the self-inductance of the receiver, and so reduce the tendency to sparking at the contacts of the transmitting relays.

On all fast-speed repeaters a galvanometer is now inserted in series with the receiver in the leak circuit. The galvanometer gives a means of determining the neutrality of the repeated signals, and any bias detected can readily be eliminated by adjusting the transmitting relay.

Duplex Repeater. The neutral relays and auto-switches are unnecessary for duplex working. The

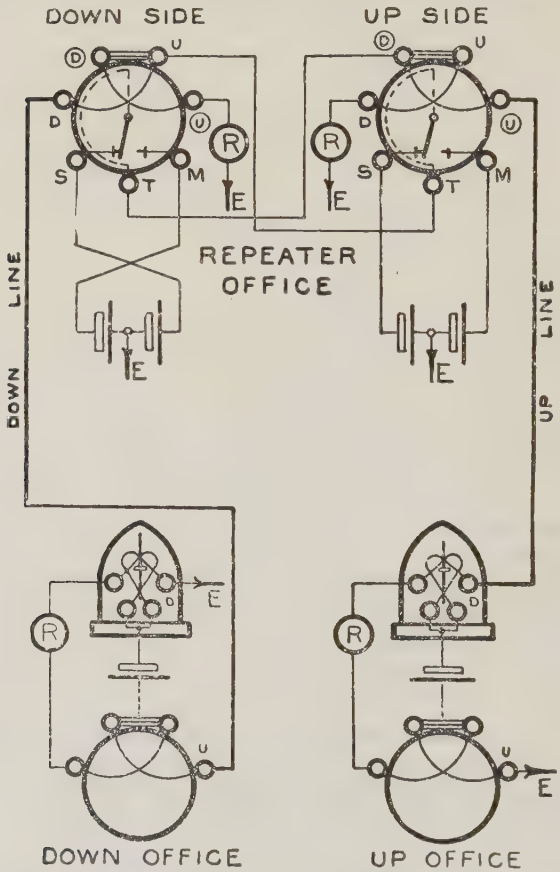

Fig. 510. Skeleton Connections of Duplex Repeater Showing Terminal Stations with Their Keys at Rest

tongues of the up and down transmitting relays are respectively connected to the splits of the down and up relays. The compensation circuits are arranged as

in ordinary duplex working, and the condensers, rheostat, retardation and condenser coils are denoted by " R " in the conventional diagram given in Fig. 510.

At the up and down offices the skeleton connections, when the keys are at rest, are given in order to correlate the various parts of the complete circuit. The connections (Fig. 510) are essentially those of two duplex circuits with all four compensation circuits balanced as in ordinary duplex working. The up side transmitting relay acts as if it were the key working to the down office and the down transmitting relay controlling the currents sent to the up office. The theory of duplex working has been very fully dealt with in Chapter IX, and the possible combinations are similar. If, for instance, the up office key is depressed, the tongue of the up transmitting relay moves over to M. This reversal causes the up battery to oppose that at the down office, and a mark is made at the down office by the compensation circuit passing from U to D. In Fig. 510 both transmitting relays are responding to spacing currents from the up and down offices. The important point to be observed is that the key at the up office determines the position of the tongue of the up transmitting relay, whilst the down key controls the tongue of the down relay.

The Duplex and Simplex Switch. This is of the 8-bar type, and is equivalent to eight two-way switches operated by a single lever or handle. Its functions in changing from simplex to duplex are as follows—

1. To disconnect the neutral relays.
2. To place the galvanometer coils in series with the relay as in Fig. 493.
3. To tee the leak receiver and leak relay to the T terminals of the transmitting relays.
4. To place the keys in series with the split wires for balancing and speaking purposes.

Two battery resistance coils and six-terminal two-position switches are provided, as in Wheatstone

duplex sets, for balancing purposes. The rheostat, condenser, and its timing resistances upon each side are used as the shunted or reading condenser in simplex working. Two sets of leak coils placed in a single box are used in conjunction with the leak relay and receiver, and each is supplemented by the usual leak condenser, etc., as shown in Fig. 513.

A view of a duplex repeater is given in Fig. 511.

The Leak Circuit. It is essential that the repeater station shall be able to observe the condition of the marks sent out upon either side, so that either office shall always be able to gain the attention of the relay clerk. This is provided for by means of the leak receiver and leak relay, which are connected through the leak switch to the up and down transmitting relays in accordance with the position of the peg. In this way, the receiver may be used to observe the marks sent out upon either side, whilst the two sounders, attached to the leak receiver and relay, serve to indicate calls. In simplex working, either the receiver or the relay may be joined up as in Fig. 513.

The switch consists of fourteen mounted springs (marked 1 to 14 in Fig. 512) and a peg bearing four springs upon either side. The peg may be inserted either vertically between contacts 7 to 14 or horizontally between contacts 1 to 6. The two sides of the peg are marked "receiver" and "relay" respectively, and the switch is so joined up that the engraving upon the peg denotes the sides to which the receiver and relay are connected when the peg is placed vertically. When in the horizontal position, the engraving upon the front side of the peg indicates whether the receiver or relay is in circuit.

The connections of the leak circuit and switch are indicated in Fig. 513. When working duplex, the peg is inserted vertically, and when the relay side faces the left the following connections are made: 7 to 8 by *h* and *d*, 9 to 10 by *g* and *c*, 11 to 13 by *f* and *e*, 12 to 14 by *b* and *a*. The springs *d* and *h* and *c* and *g* are respectively connected together by screws passing through the body of the peg.

Reversal of the peg joins 7 and 9, 8 and 10, 11 and 12, 13 and 14, so connecting the receiver to the down and relay to the up transmitting relay.

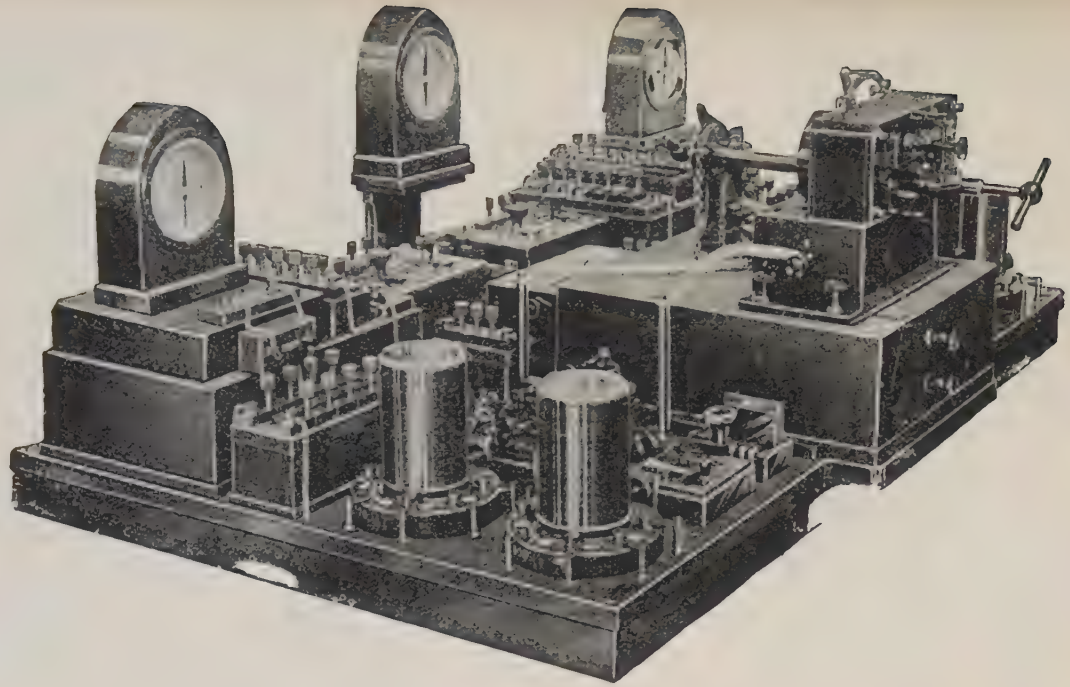

Fig. 511. View of a Simplex and Duplex Repeater

At simplex the peg is placed horizontally and with the receiver side of the peg facing the front 1 and 2 and 4 and 6 are joined.

The general arrangement will, however, be quite apparent from Fig. 513. In later forms of repeater the peg switch is replaced by a key of telephone type (*vide* p. 796).

It may be pointed out here, that should the distant stations be reversed, as frequently happens with the system of night concentration now in use, they are able

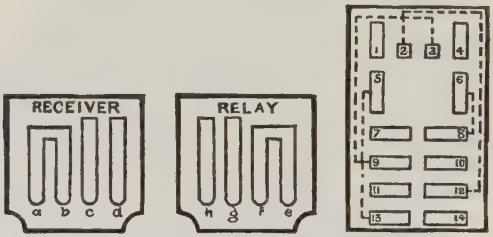

Fig. 512. Peg Switch Used in Connection with the Leak Circuit of Duplex Repeaters

to work to one another through a repeater, as the transmitting relays repeat the currents in the direction they are received. At the repeater station, however, the signals in the leak circuit would be reversed.

Standard Universal Connections. At the moment, there are three systems of apparatus connection, viz. the standard universal connections, the concentrator universal connections (*vide* page 366), and the original up and down station connections. The last must be retained for all circuits worked with the stations in series, but may be abolished when leak working is adopted. The concentrator connections might then at the same time be changed to standard universal connections, with the result that telegraph circuits throughout the world would be identical in this respect at least.

This Standard method adopted on all Continental and newspaper circuits, devised by A. C. Booth, sends negative to line to mark and similarly receives negative

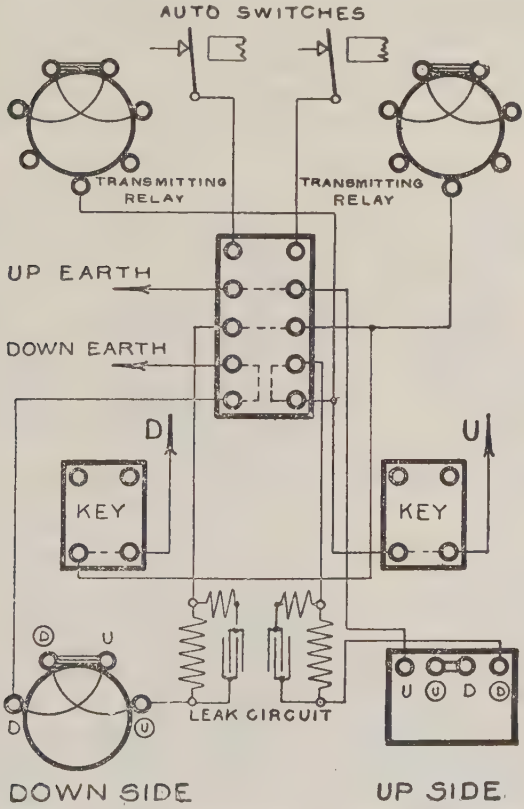

Fig. 513. Leak Circuits upon a Duplex Repeater

for marking. Duplex circuits are worked on the opposition method with a resultant saving in current and absolute uniformity of connections. A skeleton diagram of a duplex circuit with a repeater in circuit is shown in Fig. 514. The connections of the sets of

galvanometers and relays are identical, and normally positive is applied to the line at each point.

In the conditions shown all the relays space by reason of the current in the compensation circuits. The depression of the key at the station on the left causes its battery to combine with the repeater battery in the line circuit, and as the result the left repeater relay applies negative to the split of the right-hand

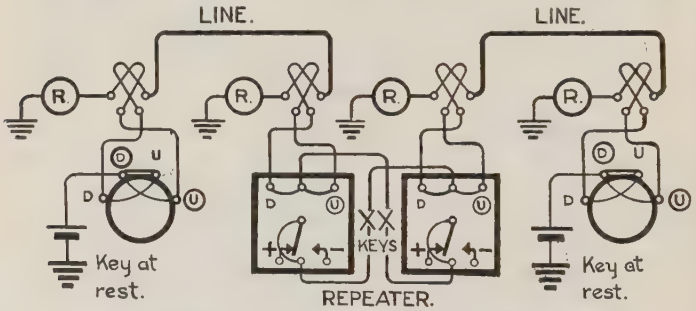

FIG. 514. PRINCIPLE OF DIFFERENTIAL DUPLEX REPEATER, UNIVERSAL CONNECTIONS

repeater relay, and so produces a mark at the right-hand station.

S.C. keys with switches are interposed between the tongues of the transmitting relays, hence, by turning the switches to send the conditions of two separate duplex circuits are obtained. This is, of course, necessary for balancing and for speaking purposes.

In the case of simplex circuits with standard universal connections, it is necessary only to remark that the spacing current is positive and, consequently, Z and C of the key are connected to positive and negative respectively. Since negative is used for marking D of the relay must be connected to line.

Simplex and Differential Duplex on Both Sides—Universal Connections. The arrangement of this Repeater is somewhat complex, and it is therefore dealt

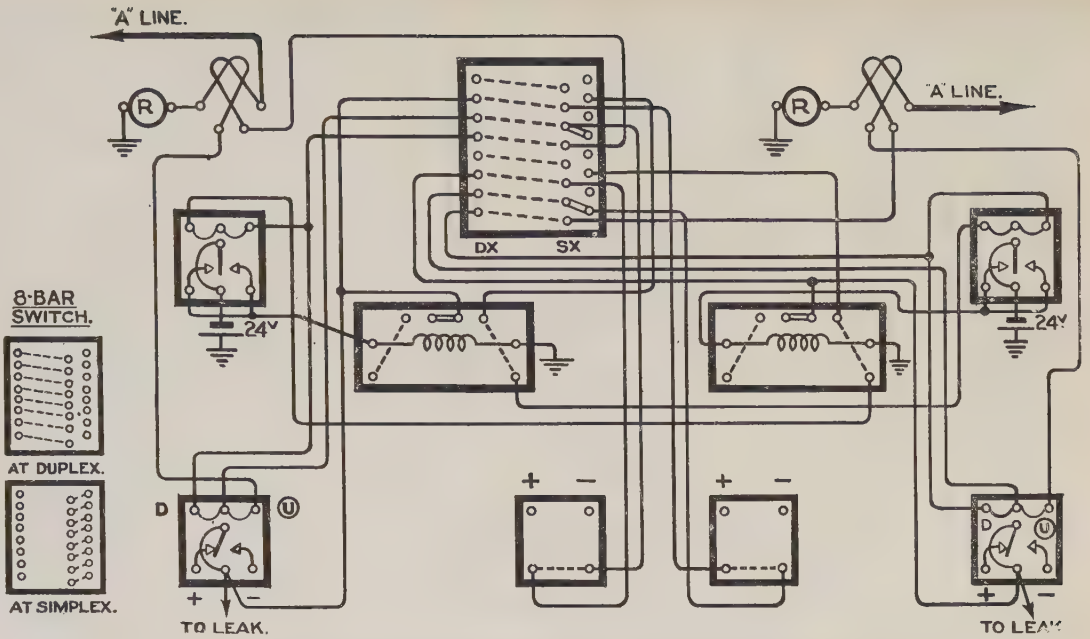

Fig. 515. Duplex and Simplex Repeater Switch Connections at Duplex

with in sections. The apparatus is fitted on two decks as in Fig. 520, the upper containing the galvanometers, sounders, leak coils, battery switches, rheostats, and resistance lamps, etc. The lower deck contains the relays, auto-switches, keys, condensers, and timing resistances.

The duplex and simplex switch is of the 8-bar pattern which consists of eight two-way switches operated by

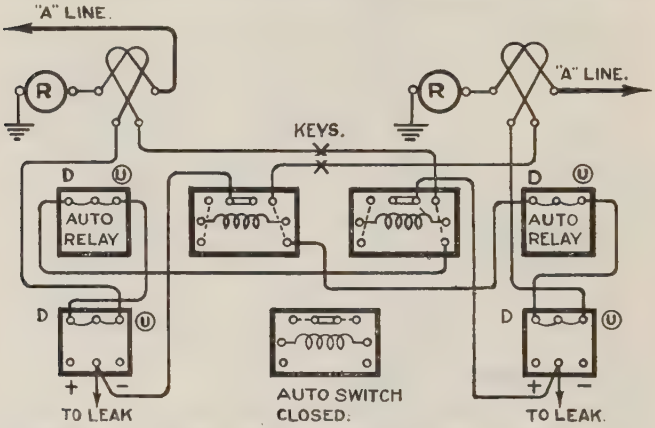

Fig. 516. Duplex and Simplex Repeater Connections at Simplex

a large knurled screw handle. In the position shown by the dotted connections in Fig. 515, the duplex conditions illustrated in Fig. 514 are produced, the auto-relays being disconnected.

When the switch is turned to simplex, its internal connections are as shown in the lower left-hand side of Fig. 515. The resulting connections of the set are then as in Fig. 516. The local circuit of the auto-relay has been omitted for the sake of clarity.

Relays with Rectangular Bases.* All modern Repeaters are equipped with relays of this type (see page

* "Telegraph Repeaters," by A. C. Booth, *P.O.E.E. Journal*, Vol. VII, p. 317.

240), having contact plates for automatically making all the required connections on being slipped into position. Spare relays, already cleaned and adjusted, are kept at hand for the immediate replacement of any working relay that may show signs of sparking, sluggishness in action, or definite bias.

Resistance Lamps. Separate positive and negative voltage leads from the fuse case pass through resistance lamps on each side of the repeater, and thence via 6-terminal 2-position switches to the transmitting relays. When either switch is turned to resistance, *S* and *M* of the transmitting relay are earthed through a resistance lamp. There is, however, a two-way switch placed beside each key on the lower deck which will, when turned, earth the split of the relay through a resistance lamp and thus avoid any effect which may result from defective contacts on the transmitting relay concerned. The key switch must, of course, also be turned to send, and the key be at rest to obtain this condition.

The Leak Circuit. Two separate leak circuits are connected to the tongues of the transmitting relays. One of them contains a Wheatstone receiver mounted in the centre of the lower deck and the other is worked by a standard relay. A 24-point switch enables the receiver to be used to observe the signals on either side at will. This switch is of the telephone key type and consists of two sets of four central springs, each of which makes contact with one of two springs according to the position of the handle.

The springs are represented by small circles in Fig. 517, and the dotted connections result when the handle is in the position shown. Reversal causes all the central circles to be connected to their immediate right-hand neighbours.

Inspection of Fig. 517 will show that when the receiver and relay are reversed, the sounder connections are also reversed, thus securing that the station on the

left always works to the left-hand sounder, while the station on the right always works to the right-hand sounder, irrespective of the position of the receiver and relay.

The local contacts of the leak receiver and relay are connected to the alarm repeater No. 3 (*q.v.*).

Adjustments. The transmitting and neutral relays should be carefully adjusted before being fixed on a repeater board.

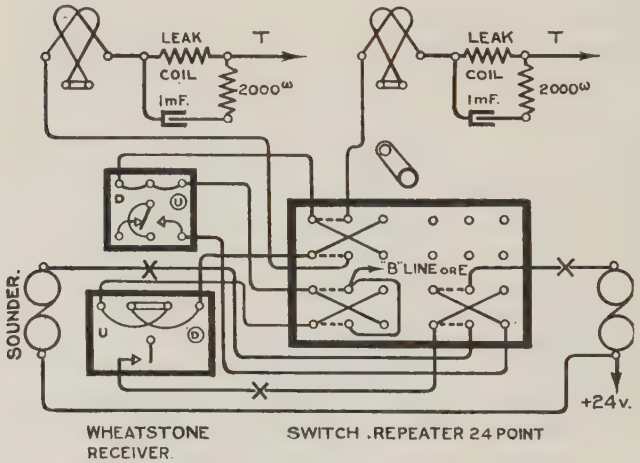

Fig. 517. Leak Circuit

The working parts should move freely and the relay should respond readily to a current of $\frac{1}{2}$ mA. To obtain the best adjustment it is necessary to place the permanent magnet fairly close to the armatures. A suitable distance is about double the thickness of a Morse slip, and if the magnet is not an unusually strong one it will be found that the spindle is not magnetically pivot bound. It is well also to place the contacts in a neutral position so that the tongue will remain against either contact. Neutral relays in addition require the springs adjusted to keep the tongue midway between the contacts. To do this put the spring on the spacing side over the tongue first, and put just sufficient tension on this to hold the tongue against the spacing contact. The other spring is then put on the tongue and tension put on sufficient to bring

the tongue midway between the points. For a very fine adjustment for fast-speed working close up the spacing contact till the local circuit is closed on that side, opening a trifle to break the connection, and then similarly on the marking side.

In adjusting the auto-relay with spiral springs care should be taken that the least possible tension is given to the springs. A considerable amount of tension should not be given to the springs. Where the adjustment has been carefully made it is by no means unusual for the relay to work for some weeks without readjustment.

The working speeds of all the most important Wheatstone circuits are tested each day, in order that the adjustments may be verified or corrected before the heavy traffic commences. The maximum working speed, known as the "standard speed" of each circuit, is stated at the time of its installation.

Prior to commencing the daily speed trials the contact points of the transmitting relay should be burnished, and too much care cannot be exercised in this respect as sparking contact points necessitate repetitions and result in a reduction of speed through the points having to be opened to eliminate the sparking. In fixing a speed it is well to endeavour to prevent a short-circuit of the contact points. While the transmitting relay is responding to reversals experience will soon enable one to close up the points to the finest possible adjustment without short-circuiting by placing the tip of a finger against the back of the relay tongue, thus readily noting the amount of play as the points are closed up.

Before putting a repeater to duplex it is advisable to see that resistance is put in the rheostats, otherwise fused apparatus may result.

Faults. Whilst it is scarcely possible to schedule every fault which can occur upon a repeater-board, there are a few defects of common occurrence which may with advantage be here recorded. It is well not to interfere with the adjustments of the spiral springs of the neutral relay more than is actually necessary when once a satisfactory adjustment for general working has been obtained.

When a fault appears, it is unwise to alter any adjustment until the nature of the defect is known with certainty.

FAULT. *Auto-switch jumping whilst stations working.*

1. Observe the incoming currents to see that both currents are received from the sender's key or if there is a line failure.

2. If incoming currents are weak adjust both contact points of auto-relay to give a finer adjustment.

3. Failing with these it may be necessary to clean the contact points of the auto-relay.

There should be no resistance in the rheostats of repeaters in circuit on newspaper wires worked by key.

FAULT. *Auto-switch jumping whilst circuit at rest.*

This is probably due to induction or contact. If due to induction—

1. Insert resistance in rheostat.
2. Open contact points of auto-relay.

Lightning discharges also cause the auto-switch to jump. Possibly other repeaters would then be affected, the kick of the auto-switch is sharp and pronounced.

FAULT. *Auto-switch sticking whilst circuit at rest.*

1. Faulty adjustment of auto-relay.
2. Faulty adjustment of auto-switch armatures.

When a station reports a current being left on at the repeater a glance at the galvanometers will usually suffice to show whether this is so or not. If both galvanometers show a deflection, the current is probably coming into the repeater from one side or the other. To make certain of this, put over both switches to "send," and if the armatures of the auto switches are at once released the fault is not at the repeater. If, however, the levers fail to return to their normal position, the fault is with the repeater and must be at once attended to.

FAULT. *Signals running together or failing.*

1. Line fault.
2. Sender's key faulty.
3. Misfitting slip,
4. Contact points of transmitting relay dirty.
5. If duplex, the balance should be verified.

FAULT. *Sending batteries short-circuiting.*

1. Contact points of transmitting relay too close and shorting through tongue.
2. Line to earth very near.
3. Lightning protector short-circuited.
4. Key screwed down.

This fault would cause the indicator bell to ring.

FAULT. When an office advises that they are *unable to gain the attention of the repeater clerk*, and it is found that no call is being received, the key switch should be put to "send," and if the terminal station's current is received on the galvanometer the fault is likely to be in—

1. The right-hand lever of the auto-switch. If not there—
2. Examine switch of key.
3. Arms of rheostat.
4. And all other connections of the incoming current.

FAULT. *Weak signals in the leak circuit* might be due to—

1. Too much resistance in leak coils.
2. Faulty receiver adjustment.
3. Earth on line, close up to repeater. This latter fault might cause the indicator bell to ring.

FAULT. *Signals unreadable at terminal station although good marks are obtained on the leak receiver.*

1. Line fault.
2. Instrument fault at the distant station.
3. Right-hand lever of auto-switch not making good contact. (This is somewhat improbable.)

An earth fault is frequently caused by lightning discharges short-circuiting the protectors.

Faults occasionally occur in the galvanometers. Most frequently these are due to short-circuiting of the coils, as one coil of the galvanometer is always to earth. Galvanometer coils are often fused by lightning, and in some cases vacuum protectors have been placed across the galvanometer coils to protect them from injury. A disconnected shunt on the galvanometer would not permit a perfect balance to be obtained at duplex by means of the galvanometer, and would be detected by balancing to clear the slip with reversals passing to line.

Loss of Speed in Repeating. The following results were obtained in experimental work. The tests were taken between three offices, *A*, *B*, and *C*; *B* being the intermediate point.

Working direct *A* to *B*, the latter station, using a receiver, obtained a speed of 375 words per minute; *B* to *C*, under similar conditions, the speed was 363. With a repeater at *B* and *A* sending by transmitter to *C* the speed was 310, but the repeater station could now read 400 words per minute. The loss of speed *A* to *B* with a receiver at *B* would appear to be solely due to the mechanical inertia of the receiver. If it became desirable then to get the highest possible speed out of a wire, it would be advisable to make the receiver part of the local circuit of a relay. The fact that the relay repeats 400 words a minute which can be read in the leak circuit, whereas the distant station can only read 310, brings to light a fact which is generally overlooked, and this is that the leak is nearly a perfect circuit. Capacity being practically a negligible quantity in the leak and the self-inductance of the receiver being suitably balanced not only by the condenser but by the very high resistance in the leak circuit, the steady current value is almost instantly attained. The speed *B* to *C* direct from a transmitter is 363 as compared with 310 from *A* to *C* relayed at *B*. Even with the elimination of the galvanometer, neutral relays, leak circuit, etc., merely

leaving the transmitting relay at B, the speed A to C could not be increased beyond 310. The only conclusion in determining where the loss of speed takes place would appear to be that it is due to the difference in the nature of the impact at the transmitter points as compared with those of the transmitting relay contact points.

Bridge Duplex Universal Connections. Long cable circuits are usually worked on the Bridge duplex

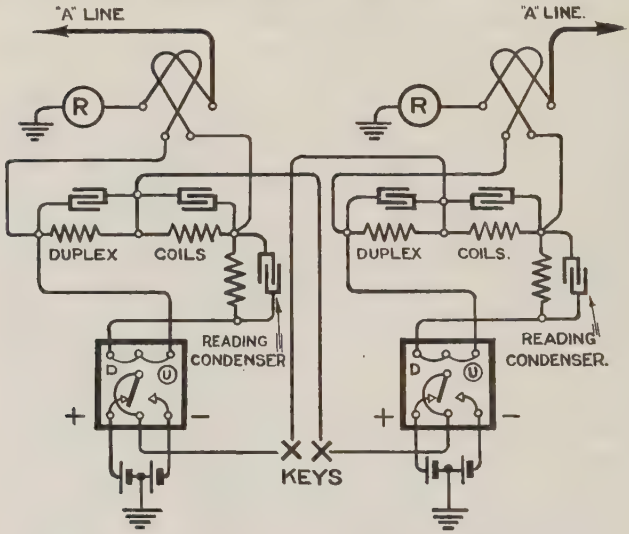

Fig. 518. Bridge Duplex Repeater Skeleton Connections

system in order to obtain a higher speed of working than is possible with the differential duplex. Long underground circuits working with high-speed apparatus have to be fitted with repeaters when the lines exceed about 200 miles in length. In some cases the required speed is obtained with differential duplex connections on both sides, but, in others, when the repeater cannot be installed at or near the electrical centre, it may be necessary to fit differential duplex

on the shorter side and Bridge duplex on the longer side. In certain instances as, for example the repeaters at Preston on the Northern underground, both sides have to be arranged for Bridge simplex-duplex working.

The skeleton connections of a repeater working as a Bridge duplex on both sides are shown in Fig. 518. The connections are on the standard universal plan in which negative is sent and received from line for mark-

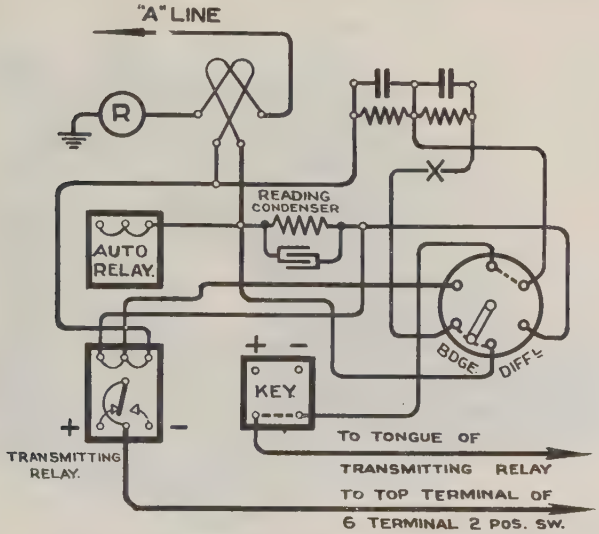

Fig. 519. Bridge or Differential Duplex on Either Side

ing. Hence, the terminal stations must be similarly connected. The required connections will be produced by reversing the battery and the lines on the galvanometer in Fig. 277.

Many of these circuits are worked on metallic loops and, in this case, separate batteries for each circuit are required. The *B* line is connected to the end of the balancing apparatus and to the centre of the divided battery which, of course, is not earthed in this case.

The tongue of each transmitting relay is connected to the split of the other relay and, consequently, the signals received on one side of the repeater are sent out from the tongue of that relay to the other station.

A galvanometer is included in each of the leak circuits so that the signals on both sides may be continuously and simultaneously observed when necessary.

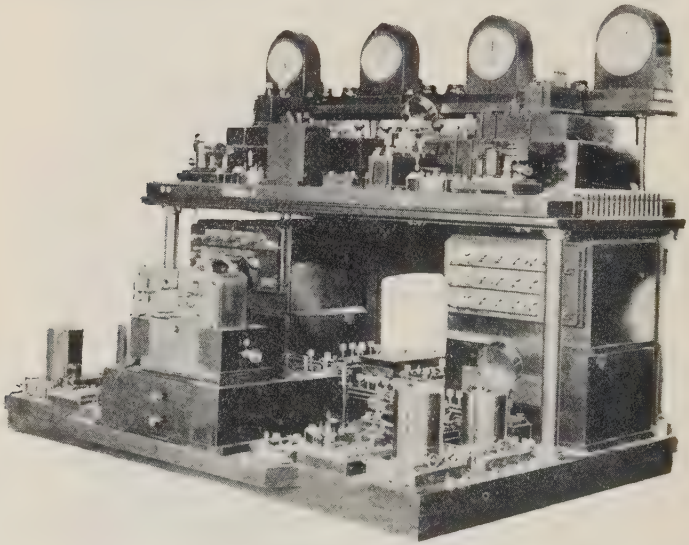

FIG. 520. DUPLEX REPEATER BRIDGE OR DIFFERENTIAL ON EITHER SIDE

Duplex, Bridge or Differential on Either Side. By means of a 6-terminal 2-position switch on each side of the repeater the connections may be made either for bridge or differential duplex working as required. This facility gives greater flexibility in the use of the various repeaters* since *either* side may be worked bridge or differential independently.

* "Telegraph Repeaters," by A. C. Booth, *P.O.E.E. Journal*, Vol. VII, p. 317–327.

Fig. 519 shows the skeleton connections of the switch on the left side of the repeater. With the handle to " Bridge " the connections shown in Fig. 518 are established. When turned to " Differential," the reading condenser is short-circuited by the bottom, and bottom left terminals of the switch and the duplex coils are disconnected. The tongue of the transmitting relay (not shown) on the right is joined to the split of the transmitting relay. Thus, the connections of Fig. 514 are produced.

The change over for simplex working is made by an 8-bar switch and this presents no features which have not been previously dealt with on page 822. The leak circuits are also similar, each containing a galvanometer and the leak relay and leak receiver being reversible by moving the 24-point switch.

The connections for bridge duplex on one side and differential duplex on the other present no difficulty. The tongue of the bridge side transmitting relay is connected to the split of the differential side transmitting relay and its tongue to the centre of the duplex coils. Needless to say, if a terminal station is joined up as a differential duplex, the side of the repeater connected to it should also be worked differential. A view of the repeater is shown in Fig. 519.

Permanently Duplex Repeaters* (Figs. 521 and 522). When simplex working is not required, the repeater can be very considerably simplified. For example, on the Anglo-German cables passing through North Walsham, the Baudot circuits are not at any time worked simplex. Both sides are worked on the differential duplex system.

The repeater is, however, required for simplex Hughes working at night, thus necessitating provision for single current working, which is arranged by turning a switch to cut off the spacing voltage and replace it by a resistance. The cable section is kept always at

* " Telegraph Repeaters," by A. C. Booth, *P.O.E.E. Journal*, Vol. VII, pp. 317–327.

duplex, and the aerial section is put out of balance sufficiently to avoid return signals to the cable.

Forked Repeaters. There are cases in which it is required to repeat on to two circuits which have no direct connection, i.e. *A* (up office) may transmit to *B* and thence to *C* and *D* over wires connecting *B*

Fig. 521. Permanently Duplex Repeater

and *C* and *B* and *D*. This may be done by joining the circuits from *C* and *D* to the down side of an ordinary simplex repeater, but since *C* and *D* are both down offices, any signals sent out by *C* would be received reversed at *D* and vice versa ; *A* would, of course, read both correctly. The forked repeater was designed to enable the " fork " offices to read each other's signals, and, in the apparatus about to be described, provision is made for Wheatstone working from all offices.

By means of a 6-bar switch the forked repeater may

be converted into a simplex repeater of the type illustrated in Fig. 509. It will, however, suffice to indicate the principle of the arrangement by means of a skeleton diagram.

The forked repeater contains four galvanometers (one in the leak circuit), three transmitting, three auto-relays, three auto-switches, and two auto-relaying sounders.

Path of Current. Referring to Fig. 523, it will be seen that a current from the up station passes to earth

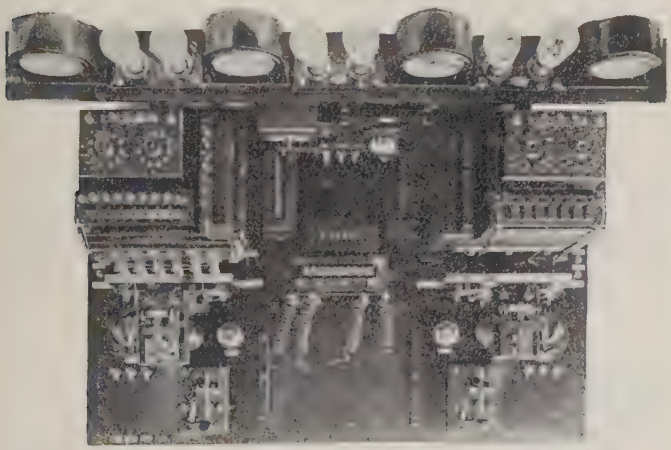

FIG. 522. PERMANENTLY DUPLEX REPEATER
View from above with the Receiver and Transmitter Relays removed

via the right-hand lever of auto-switch 1, up transmitting relay, rheostat, and up auto-relay. The latter relay closes auto-switches 2 and 5. The current from the up transmitting relay passes to the down line 1 via the right-hand lever of auto-switch 2 and to down line 2 via the left-hand lever of auto-switch 5. A portion of the total current also passes through the leak circuit via the left-hand lever of auto-switch 2. A current from down line 1 passes to earth via the right-hand

levers of auto-switches 2 and 3, the left-hand down auto-relay in parallel through the down transmitting relays and the rheostat. The left-hand auto-relay closes auto-switches 1 and 4 and the current from the left-hand down transmitting relay passes to the up line via the right-hand lever of auto-switch 1, whilst the current from the right-hand down transmitting relay passes to down line 2 via the left-hand lever of auto-

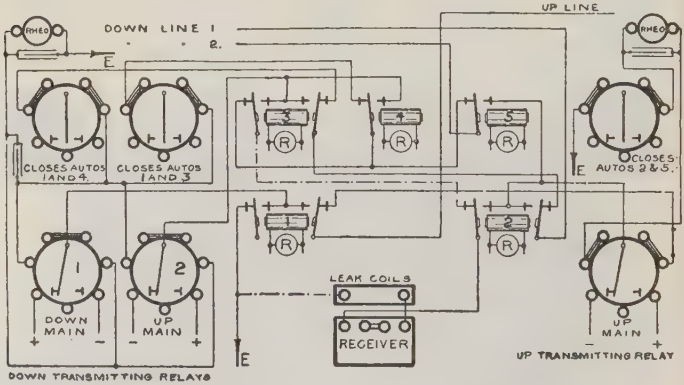

Fig. 523. Principle of Forked Repeater

switches 4 and 5 and to the leak circuit via the left-hand levers of auto-switches 4, 3, and 2.

A current from the down line No. 2 passes to earth via the left-hand levers of auto-switches 5 and 4, right-hand down auto-relay, in parallel through the down transmitting relays and the rheostat. The right-hand down auto-relay closes auto-switches 1 and 3, and the current from the left-hand down transmitting relay passes to the up line via the right-hand lever of auto-switch 1, as in the case of the current from the down line 1, whilst the current from the right-hand down transmitting relay passes to down line No. 1 via the right-hand levers of auto-switches 3 and 2 and to the leak circuit via the left-hand levers of auto-switches 3 and 2.

It will thus be seen that the signals are " straight " to all stations, and that the down stations are enabled to read each other's signals.

A 6-terminal 2-position switch is added to the board in order that the condition of the signals sent out, upon either of the down lines, may be observed. The key for corresponding with the terminal stations is of the reversing key pattern, but has a send and receive switch equivalent to three mechanically connected two-way switches. This is necessitated by the fact that signals are simultaneously sent out to the three lines ; one side of the key is used for the down lines, whilst the other side sends out currents upon the up line.

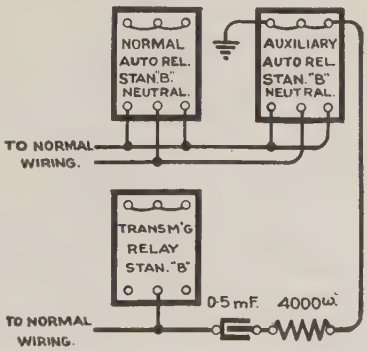

FIG. 524. AUXILIARY AUTO-SWITCH

Auxiliary Circuit for Auto-switch.* This arrangement (Fig. 524) is used when difficulty is experienced in obtaining a sufficiently fine adjustment of the normal auto-relay for fast speed simplex working. The precise values of the condenser and series resistance are determined by experiment for the particular circuit ; those shown in the figure are designed to indicate the order only of the values required.

Hughes Repeaters. These repeaters, which are of the single current type are extremely simple, for, shorn of all the auxiliary apparatus, the simplex type consists merely of a pair of standard relays and batteries. In the simplex type (Fig. 525) the down line cable is taken to T of the up relay and via the S contact through the

* " Simplex Working on Fast Speed Repeaters," by E. Lack. *P.O.E.E. Journal*, Vol. XIX, p. 101.

coils of the down relay, whilst the up line passes through the T and S contacts of the down relay and thence through the up relay coils. The transmitting batteries are joined to the M contacts of the relays. A current sent out from the down station passes through the coils of the down relay, thereby moving T over to M, and thus applying a positive current to the cable.

At the points marked X keys of the single current type with switch are inserted to enable Morse signalling

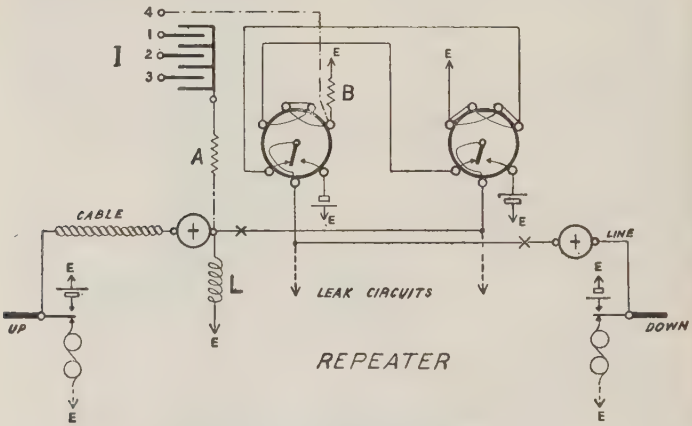

Fig. 525. Hughes Repeater

to be used between the repeater station and the terminal offices. In addition two relays with sounders connected with their local circuits are joined in leak, and two Hughes sets also are provided in leak. The S contact of the leak relays are used in connection with the silencer (*q.v.*).

The 1000^{ω} inductance coil L is joined to the cable in leak in order to sharpen the signals. Its action is similar to that of a signalling condenser, for when an E.M.F. is applied to the cable it is, owing to the opposing E.M.F. set up, equivalent to a path of very high resistance, and this resistance gradually diminishes

whilst the current is rising in its coils, until finally it would fall to its ohmic resistance. This condition is, however, never reached owing to the short duration of the signals. On the cessation of the signalling current the E.M.F. of self-induction acts in the same direction as the cable discharge and thus more rapidly discharges the cable.

The Hughes duplex repeater does not involve any new principles, and when the 8-bar switch is turned to simplex the connections become those illustrated in Fig. 505. At duplex the conditions are comparable with those of the ordinary fast-speed duplex repeater with bridge working on the cable side save that the spacing battery on the transmitting relay is replaced by battery resistance coils. An inductive leak is applied to both line and compensation circuits.*

Anti-induction Device. The Anglo-German cables are roughly 300 miles long with resistances of 1600$^{\omega}$ to 2700$^{\omega}$ and capacities of 71 to 93 m.f., and it was found that, notwithstanding the brass taping of the cores, there is a certain amount of inductive interference between the four wires in each cable. This was not of great moment in simplex working, but in duplex working it is necessary to counteract it. The anti-induction device applied by A. C. Booth is shown by the broken lines in Fig. 525.†

Each signalling current sent from the repeater station into any one of the four wires in the cable produces inductively a corresponding, but very much smaller current impulse in the reverse direction on each of the other three wires. These impulses pass from the cable through the up transmitting relays, but by applying to the relay a fraction of the original or disturbing current impulse a considerable reduction

* The full connections are given on plate 92, *Connections of Telegraphic Apparatus and Circuits, G.P.O.* (1906).

† "A Method of Reducing Inductive Interference Between Wire and Wire of a Telegraph Cable by means of Condensers," by A. C. Booth, *P.O. Electrical Engineers' Journal*, Vol. II, p. 209.

in the amount of inductive interference is obtained. To accomplish this each cable wire is connected through a resistance coil having a resistance of several thousand ohms to one side of three condensers the other sides of which 1, 2, and 3 are respectively connected to the relays on cable wires 1, 2, and 3. The induced current, therefore, is opposed and neutralized by the current sent from the condenser, the latter dividing between the resistance coil *B* and the relay. Consideration will show that the condensers on set 1 are joined to the relays on sets 2, 3, and 4, that those on set 2 are joined to the relays of sets 1, 3, and 4, and on set 3 to 1, 2, and 4 relays.

In the case of duplex circuits the wire connecting resistance *B* is joined up as in simplex working ; but the condenser connections are taken to a point between the relay and rheostat of the disturbed circuits. The induced currents from the cable in the line coil of the relay are then opposed by the condenser currents in the compensation coil.

The precise values of the condensers and the resistance coils *A* and *B* are determined experimentally. Each condenser consists of twelve ·1 m.f. condensers, which may be arranged to suit the requirements of each case ; the usual capacity is three ·3 m.f. condensers on each circuit.

Quadruplex Repeater.* The principle of such a repeater is illustrated in Fig. 526. It differs from all the repeaters previously considered in the method of observing the condition of the transmitted signals.

The up and down lines are joined to quadruplex sets at the repeater station ; each *A* or transmitting relay determines the direction, and the corresponding *B* relay, with the aid of the incrementers, the voltage applied to the split of the other set of relays. In this way the signals received on each relay are repeated onwards.

* An interesting account of the evolution of the quadruplex repeater is given in " The Quadruplex Repeater : Experiments and Working at Nevin," by J. N. McCurdy, a paper read before the I.P.O.E.E., January 28, 1907.

In the compensation circuits a non-polarized relay is included for the observation of the *B* side signals sent out in each direction whilst the *A* side signals are judged by the up and down leak relays or receivers joined to the tongues of the *A* or transmitting relays. A galvanometer is also concluded in the *A* leak circuit, and by this means both the *A* and *B* currents can be noted.

The condensers connected across the incrementers are to prevent breaks in the signals due to the *B* kick effect, and the

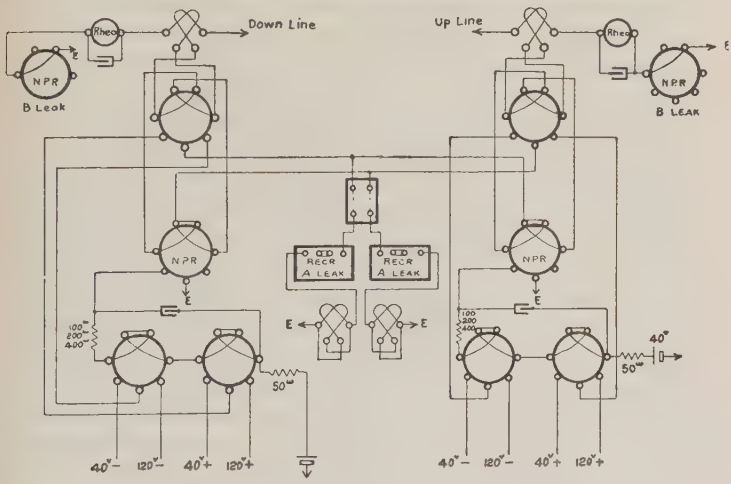

FIG. 526. QUADRUPLEX REPEATERS

resistance coil included serves to prevent large currents flowing through the relay contacts at the moment of closing the circuit. The device is in principle identical with that applied to the *B* side sounder on an ordinary quadruplex circuit.

Drop Indicators in Main Battery Leads. These indicators are non-polarized and are of the drop shutter type. The coils, in multiple, have a resistance of 100^{ω}, and are shunted by a 10^{ω} coil. One indicator is joined in series in each main negative battery lead. The indicator is unaffected by ordinary working currents, but when a short-circuit of the battery occurs either at the transmitting relay contacts or by a full earth

on the line near the station the heavy current which then flows through the indicator is sufficient to actuate it. The shutter falls and closes the circuit of the 24^{v} local battery through a trembler bell. A further indication of the fault is given by the glowing of the lamp resistance in the battery lead.

ALARM REPEATER No. 3

Considerable difficulty would be experienced in detecting calling signals for the repeater station from amongst the fifteen or twenty repeaters working simultaneously in a small room. Consequently, arrangements have been devised whereby the sounders are normally cut out of circuits, but may be cut in at will—by either of the terminal stations—to call the repeater station, or by the latter when required for the active observation of passing signals. In order to call the repeater station, the terminal office holds down the key for twenty seconds and then gives the calling code.

The first device of this character was the clockwork sounder silencer* invented by A. Eden. Clockwork was next replaced by various air and oil dash-pot arrangements† but none of these were entirely satisfactory. The final form, known as an alarm repeater No. 3‡, has been evolved from plan suggested by Donald Murray.

An appreciable time is taken to charge a condenser fully through a high resistance ||. By choosing suitable values this time may be made very much greater than the length of a marking current. The condenser is

* Described in earlier editions of this work.

† "Sounder Silencers at Telegraph Repeater Stations," by J. J. Hardie, *P.O.E.E. Journal*, Vol. II, p. 121.

‡ "Alarms Repeater No. 3," by J. B. Laidlaw, *P.O.E.E. Journal*, Vol. XVIII., p 18.

|| $Q = KV\left(1 - \epsilon^{-\frac{t}{KR}}\right)$. If $t = KR$, then $Q = KV\left(\frac{\epsilon - 1}{\epsilon}\right)$ i.e. ·634 KV. Hence, with a condenser of 2 m.f. capacity in series with a resistance of 6 megohms, the condenser is charged to ·634 of the full charge in ·000002 × 6,000,000 = 12 sec.

discharged through a drop indicator every time the tongue of the relay touches the spacing stop. Hence, ordinary marking currents are not long enough to charge the condenser to a sufficient extent for its discharge to operate the drop indicator. But when the marking current is prolonged by holding down the key for twenty seconds, the condenser becomes fully charged and its discharge operates the drop indicator. The local circuit of the indicator rings a bell and lights

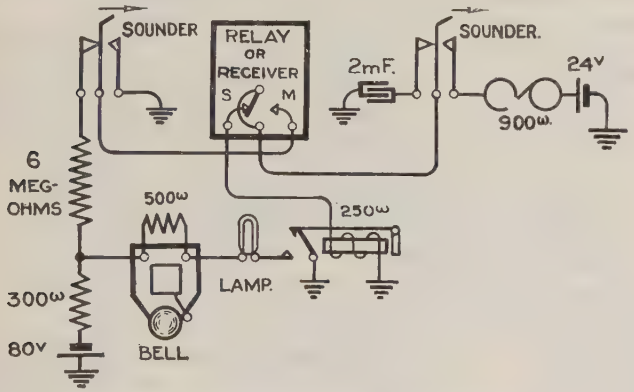

Fig. 527. Principle of Alarm Repeater No. 3

a calling lamp. The sounders are then switched in by moving over the Key No. 73.

The principle of the alarm is shown in Fig. 527, and the full connections in Fig. 528. From the former it will be seen that the 80v battery charges the condenser when the relay tongue is on *M* and discharges it through the drop indicator when it touches *S*. The prolonged marking current when the terminal station holds down the key for 15 or 20 seconds suffices to charge the condenser fully, i.e. to 80v, and on release of the key the discharge through the indicator causes the shutter to fall. The local circuit is made causing the bell to ring and lighting the calling lamp fixed on

the alarm box. The shutter is restored to normal and the switch is moved over to " sounder," which connects the sounder and battery to T and earths M so that the signals on the relay are registered on the sounder.

Each alarm deals with both leak sounders, and, therefore, contains two circuits. The Key No. 73 has

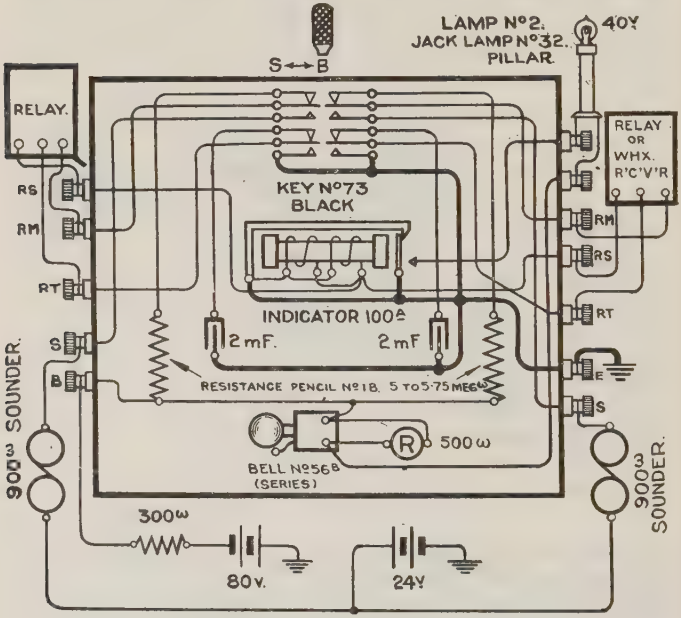

Fig. 528. Connections of Alarm Repeater No. 3

twelve springs and in the normal position makes four contacts, and when actuated breaks these and makes four. When thrown to this position the key locks and so remains until replaced.

Hughes Silencer.* Since the normal signals consist of short currents separated by unequal intervals of

* " Sounder Silencers at Telegraph Repeater Stations," by Jas. J. Hardie, *P.O. Electrical Engineers' Journal*, Vol. II, p. 121.

time, an extremely simple form of silencer requiring neither clockwork nor spacing currents can be used. It consists of a large wheel *w* mounted on a common base with the sounder. Near the edge of the wheel an adjustable counterweight is fixed so that the projecting pin *p* holds up the sounder armature by means of the

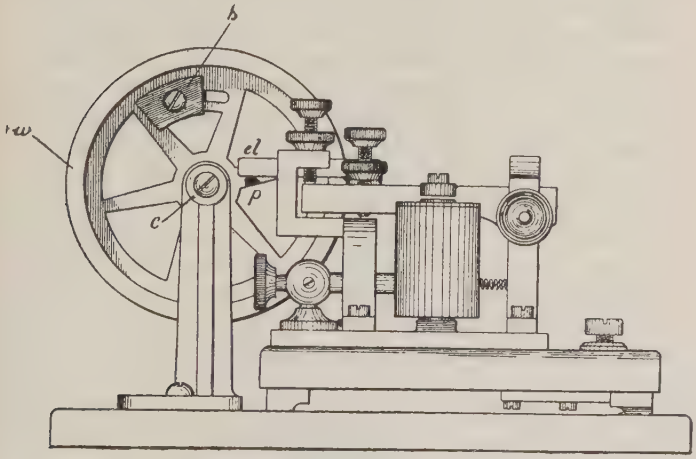

Fig. 529. Hughes Silencer

armature extension lever *el*. Hughes signals tend to push the pin *p* downwards, but the inertia of the wheel is such as to prevent the depression of the armature. When a dash or Morse signal is sustained sufficiently long to depress the lever fully, and thus to turn the wheel, leaving the pin *p* on the left, the sounder armature is freed to receive the signals. The wheel is reset by hand on conclusion of the communication.

It will be observed that the sounder is brought in without the usual " wait " of 20 seconds. The instrument was designed by the German Telegraph Administration and has been in use at Emden for many years.

REGENERATIVE REPEATERS*

All the repeaters described so far consist essentially of the reception on a relay of the signal from the sending station and its retransmission from the tongue of that relay to the receiving station. Hence, any distortion of the received signal at this relay is repeated onwards and may be still further distorted by the line and receiving apparatus. The principle of the regenerative repeater consists in such an arrangement as will ensure that any signals received will direct such mechanism as will ensure that perfect undistorted signals are transmitted onwards. In the case of the Baudot, the problem is quite simple since it is necessary only to let the signals received at the repeater determine the positions of five transmitting levers, and when this has been done to send out the signals represented from other segments on the distributor. The signals are not sent simultaneously as they are received, but after an interval during which the transmitting levers are set. This delay is of no consequence, and is merely a time lag or phase difference of perhaps ·15 second between the transmitting and receiving stations. The Divided Baudot circuits (page 587) are examples of this principle. There are also some circuits to France equipped with retransmitters in the Foreign Gallery in London.

Unless this arrangement is essential to obtain good working, the ordinary permanently duplexed repeater already described is preferable on account of its greater simplicity.

Creed Auto-repeater.† F. G. Creed has applied the regenerative principle to repeating Wheatstone signals. This has been made possible by taking advantage of the regularity of the machine sent signals.

The Creed Auto-repeater consists of a mechanical relay with a half-revolution escapement driven by a

* "Regenerative Telegraph Repeaters," by H. H. Harrison, *Electrician*, 7th January, 14th January, and 21st January, 1927.

† *Ibid.*

small motor. This mechanical relay is controlled via a power relay by the incoming signals received on an ordinary line relay. The result is that perfect signals are transmitted onwards at the same speed at which they are received.

On a shaft (Fig. 530) yieldingly driven by a slipping clutch, is provided an eccentric E and a cam. The shaft is restrained from motion by a pawl P_1 pivoted

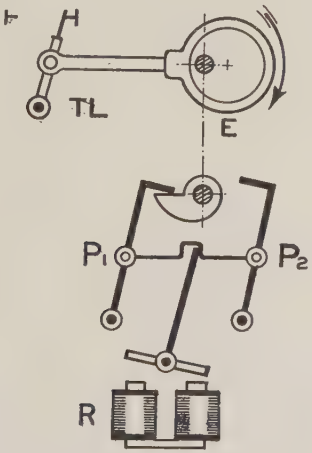

FIG. 530. PRINCIPLE OF CREED AUTO-REPEATER

to the frame of the receiver and connected by a horizontal link to a second similar pawl P_2. The horizontal link is provided with a slot in which the end of the armature of a power relay R engages. R is controlled by the local circuit of the line relay. If a marking dot signal is received P_1 is lifted clear of the cam and P_2 into the path of the cam, the shaft being allowed to escape for half a revolution. The eccentric E, during the half revolution moves TL from its spacing on to its marking stop. On the receipt of the dot spacing signal P_1 and P_2 are moved back to the position shown in the figure, the shaft makes a second half revolution

until it is caught by P_1 and everything is normal again. For dashes or long spaces the shaft is restrained from rotation for a length of time forming the necessary multiple of the duration of the dot impulse. The arrangement secures firm contacts and low transit time. The motor must be adjusted to the correct speed and held there by some form of governor, the system of pawls constituting the synchronizing means. In America, rotary distributors and re-transmitters are in general use.

CHAPTER XIX

*THE THERMIONIC VALVE AND VOICE FREQUENCY TELEGRAPHS**

INTRODUCTORY

THE idea of obtaining several channels of communication over a single circuit by the use of alternating current of several frequencies, and suitable receiving apparatus to sort out each frequency, has engaged the attention of many inventors during the past sixty or seventy years. Its practicability depends on the possibility of separating the different frequencies at the receiving end of the circuit. The Mercadier system did this effectively but had some practical disadvantages. It was used on some circuits in France, and was given an extended trial in this country; but it was not until the advent of the thermionic valve that the problem could be solved satisfactorily.

The following recommendation has been made by the *Comité Consultatif International*—

" It is of real economic importance and desirability to allocate circuits in long cables to both telephone and telegraph purposes. These circuits should preferably be worked by means of alternating currents of voice frequency, provided that the sum of the effective voltages corresponding to the frequencies used simultaneously on the same circuit be less than 2 volts or that the sum of the effective currents corresponding to the frequencies used simultaneously on the same

* The description of voice frequency telegraphs in this chapter is taken from " Voice Frequency Telegraphs," by W. Cruickshank, Paper No. 113, *I.P.O.E.E.*, 8th February, 1927; and " Voice Frequency Telegraphs," by W. Cruickshank, *Journal of the I.E.E.*, Vol. 67, p. 813. See also "A Voice Frequency Multi-channel Telegraph System," by J. M. Owen and J. A. S. Martin, *P.O.E.E. Journal*, Vol. 21, p. 267, January, 1929, and " Composited Telegraph and Telephone Working," by J. M. Owen and J. A. S. Martin, *P.O.E.E. Journal*, Vol. 22, p. 89, July, 1929.

circuit be less than 2 milliamperes. When it is required to use currents or voltages greater than the above values, it is desirable for preference to choose the circuits allotted to telegraph purposes in the outer layer of the cable and to balance them in separate groups."

There are now several systems available which fulfil these conditions, and ultimately it seems probable that all main telegraph circuits will be worked on pairs in telephone cables. In Germany, this condition is accomplished, since at the termination of the Great War, the whole telegraph system had perforce to be re-established, and there was practically no existing telegraph line plant which could be utilized.

Such a circuit working in a telephone cable produces no audible effects on adjacent pairs beyond that produced by speech induction, nor is it affected even by the ringing currents used on the telephone trunks. The voltage impressed on the circuit at the sending end varies from about ·25 to ·6^{v} according to the number of voice frequencies simultaneously sending. At the receiving end the E.M.F. received is less than a tenth of a volt.

The voice frequency currents are attenuated to such a value that a repeater is required at intervals of about 100 miles ; the ordinary telephone repeater may, however, be used, as the frequencies employed are well within the range of those repeaters.

The voice frequency system provides up to twelve channels, in one direction only, on a metallic circuit, the number depending upon the nature and spacing of the loading on the line. Each of these channels may be worked at 100 words per minute with Wheatstone or Wheatstone-Creed apparatus. On a six-channel circuit, six start-stop telegraphs can be used, or six Siemens-Halske automatic circuits may each be worked at 106 words per minute. A Baudot can be worked on each frequency, but the receiving plate must be oriented sufficiently to allow for the time-lag in the

loaded line. Hence on two pairs of wires, six simplex quadruple Baudots may be worked in each direction, the duplex balance apparatus and the *G* relay arrangements being omitted. Yet another possibility is to use different frequencies for each of the elements of the five-unit code, thus multiplying the Baudot channels by five. The sixth frequency might be used for securing synchronism or, alternatively, to eliminate the letter-figure changeover by the use of a six-unit code.

PART I—THE THERMIONIC VALVE*

The thermionic valve used as a relay differs from an ordinary electro-magnetic relay in that (i) there are no moving parts, and it is, therefore, free from mechanical inertia ; (ii) it has no inductance ; and (iii) it supplies an amplified current which approximates very closely to the incoming current, whereas an ordinary relay merely makes a contact which introduces into the local circuit a fixed value of current quite unrelated to the value of the incoming current, subject to the qualification that the latter is of sufficient value to work the relay. It is, therefore, capable of repeating and amplifying telephone currents from one circuit to another without appreciable distortion of the wave form. It is, moreover, possible to introduce many repeaters into a very long circuit, such as that between San Francisco and New York. Thermionic valves may be connected in cascade to obtain amplification on amplification.

The broad general principle of the thermionic valve is that incandescent bodies at a temperature of 1500° C. or so give off electrons, but two conditions are essential: (1) the body must be in a fairly good vacuum;

* The description is abstracted from the following papers read before the Institution of P.O. Electrical Engineers : No. 76, " Gas Discharge Telephone Relays and Their Application to Commercial Circuits " ; " Technical Developments of Telephonic Repeaters since 1917," by C. Robinson and R. M. Chamney ; and No. 75, " Telephonic Repeaters," by A. B. Hart.

and (2) there must be a positively charged body near to create the electric force necessary to attract the electrons. This is achieved in the two electrode valve by the use of an incandescent filament in an exhausted bulb (which J. A. Fleming invented and used as a rectifier, hence the term valve). The modification introduced by De Forrest consisted in placing a grid between the filament and the plate.

The filament (Fig. 531) is maintained at a constant temperature by a 6^{v} battery A, and the normal current (rather less than 1 amp.) is adjustable by means of the slide resistance SR. The anode is maintained at a constant high potential, generally about 150^{v}, by the battery B, which is in series with the A and C batteries. The C battery consists of three or four small dry cells.

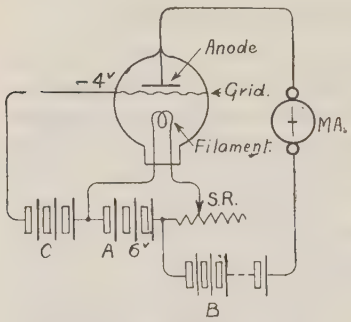

Fig. 531. Thermionic Valve Circuit

With the connections of Fig. 531 and an anode battery of fixed value, it will be found (as the filament is gradually brought up to incandescence by cutting out resistance in SR) that at a certain critical value the milliamperemeter begins to indicate a current in the anode-filament or plate circuit; this current will increase as the heating current is increased until a maximum value is reached, after which any increase in the heating current causes no change in the anode circuit. The normal value of this current is about 5 mA with present valves and 150^{v} plate battery, so that the impedance of the plate circuit is of the order of 20,000$^{\omega}$.

With the grid omitted and the B battery potential gradually raised from zero to its full voltage, the

milliammeter MA would indicate an increasing current. Electrons are driven off the heated filament on to the anode, since they are negative as compared with the positively charged anode. As the potential of the anode is raised, an increasing number of electrons reach the anode until the saturation point is reached, when practically every electron leaving the kathode is drawn into the anode (Fig. 532).

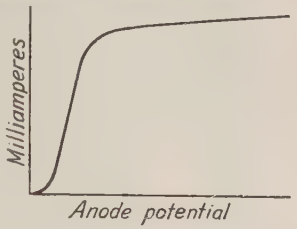

Fig. 532. Characteristic Curve of Two-electrode Valve

In the triode circuit (Fig. 531), with a fixed voltage applied to the anode, the grid is charged negatively with respect to the filament, and consequently repels the electron stream. If the charge is great enough, the grid will prevent any electron from passing it and so reaching the anode. If the charge on the grid is gradually reduced, the grid becomes more and more easily penetrable until the point is reached when the grid is at the same potential as the filament, and practically the whole electron stream is absorbed in the anode—subject, of course, to the potential of the H.T. battery being sufficiently high. If the grid is made positive to the filament, current will begin to flow between the grid and the filament (Fig. 533). Hence variations in potential, provided they are within the limits of g_1 and

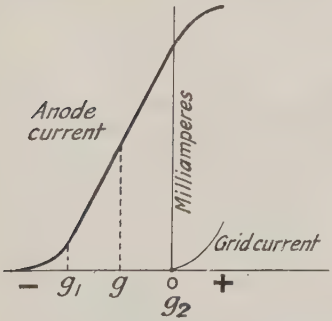

Fig. 533. Characteristic Curves of Three-electrode Valve and Grid Current

zero, will be faithfully and accurately reproduced in current output in the anode circuit.

The current in the anode circuit is influenced to a very great extent by the presence of minute quantities of impurities within the exhausted bulb, and consequently hard (i.e. very high) vacuum lamps are now exclusively used so as to obtain a pure electron discharge.

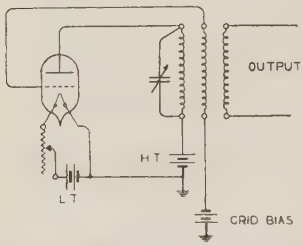

Fig. 534. Valve Alternating Current Generator

Thermionic valves of many varying designs are available. They differ only in the precise arrangement of the filament, the type of open electrode used as a grid, and the plate which may be a cylinder surrounding the grid or plates on either side of the grid. Particular designs differ in impedance and in output under given conditions.

THE THERMIONIC VALVE AS A GENERATOR OF ALTERNATING CURRENT

Alternating current of various frequencies may be generated by using the circuit shown in Fig. 534. The transformer has three windings, the last of which is the output circuit. Various frequencies are obtainable by using different values of capacity and inductance. The action of the circuit is due to the reaction between the anode winding and the grid winding, a grid bias being added to reduce the normal emission current to small limits. The start of a flow of current from the high-tension battery via the anode winding induces an E.M.F. in the grid winding, which modifies the current in the anode circuit. This modification results in a reverse E.M.F. in the grid winding, and the process goes on at a rate depending on the capacities and inductances employed. Hence alternating current of

a definite frequency is generated in the output winding, and this may be used for signalling purposes by the intervention of a key. At the receiving end these minute currents can be suitably amplified and employed to work a receiver by the use of valves as rectifiers. With such a circuit, one-way communication can be maintained at 100 words a minute over a line 100 miles long and 40 lb. conductor, with an impressed E.M.F. of about a tenth of a volt and a received current of the order of a dozen micro-amperes.

ELECTRICAL FILTERS*

The term "filter" designates circuits containing inductances and capacities so arranged as to permit the passage of an alternating current of a certain frequency, whilst offering an almost infinite resistance to other frequencies. The principle is familiar under the name of tuning to every one interested in wireless. The design of such circuits is beyond the scope of the present volume, and it is possible only to indicate a few general principles.

If a condenser and inductance are joined in series, the circuit is non-reactive when $pL = \frac{1}{pK}$ (*vide* p. 209). When such a condition exists, the circuit is said to be resonant, and the frequency p passes as though the circuit had ohmic resistance only. At any frequency differing widely from p, the impedance is very great.

If an inductance and a capacity are placed in parallel for a given frequency, the impedance of the combination is very large when $pK = \frac{1}{pL}$. This is the principle

* The theory and fundamental equations of filter circuits are given in J. G. Hill's paper of 16th March, 1922, before the I.E.E. : "Phantom Telephone Circuits and Combined Telegraph and Telephone Circuits Worked at Audio Frequencies," Vol. 60, p. 675 ; also "The Design of Filters for Audio Frequencies," by Beer and Little, *Journal I.P.O.E.E.*, Vol. 17, p. 298. The argument, however, involves a working knowledge of hyperbolic functions.

of the wave trap used on wireless sets to cut out the near-by local station when attempting to pick up very faint signals.

A network can readily be designed which will cut

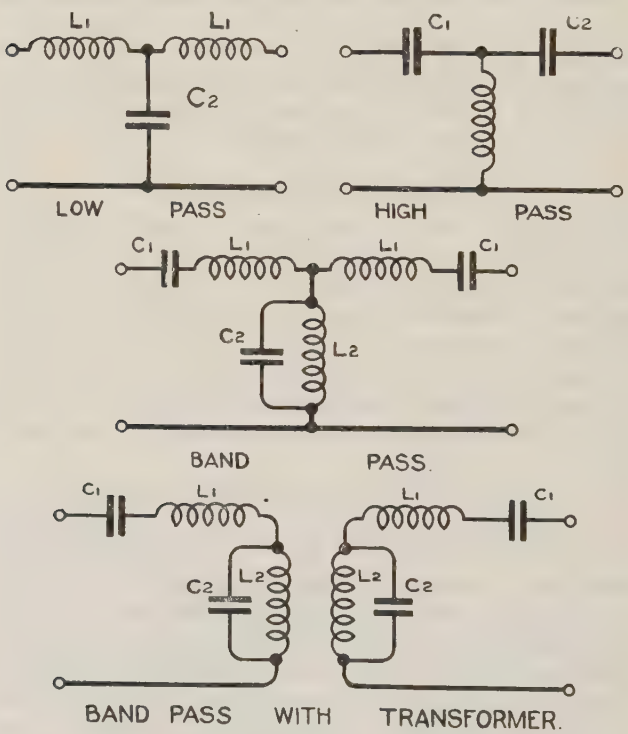

Fig. 535. Types of Filter Circuits

out all frequencies above a given value and pass only frequencies below that value, or it can be designed to cut out all frequencies below a given value and pass only those above the selected figure. The former is termed a low-pass filter and the latter a high-pass

filter. The two general types are shown in Fig. 535. In general terms it will be appreciated that an alternating current of high frequency will encounter very great impedance in the first inductance and have a comparatively low resistance path through the condenser, the second inductance still further choking out the alternating current. But for a current of low frequency, the inductance and capacity have much less effect. In the second case, the high frequency currents pass through the condensers, and the inductance prevents the shunting of any appreciable amount of current.

There is one other condition which often requires to be met, viz. to pass all frequencies between definite limits, and for this purpose the filter is arranged as in Fig. 535. This is known as a band pass filter.

Two or more of these filter networks may be placed in series to effect greater selectivity, but each one adds its quota of lost power or attenuation.

The inductance may be in the form of an induction coil or transformer, and examples of this are to be seen in Fig. 535.

Filters of all these three types can be built of varying degrees of efficiency as regards the sharpness with which they cut off the undesired frequencies at the nominal cut-off points, and also with varying degrees of freedom from attenuation of the desired frequencies. The efficiency depends largely on the freedom from alternating current energy losses of the condensers and inductances used ; and, of course, on the number of filter sections employed. Inductance coils, therefore, may have to be made with air cores or with finely divided iron cores designed to avoid losses. Constancy of inductance is also of great importance, since, if the values change, the band of frequencies passed will alter.

Examples of such filters are shown in Fig. 536, together with the measured results obtained expressed

in miles of standard cable. The low-pass filter passes all frequencies below 828 cycles per second, with attenuation amounting to less than 2 miles, and the high-pass filter acts similarly until the frequency falls to 872 cycles.

Speed of Working. The side bands extend outside the passing bands of the filters, so that, in fact, the filters do not

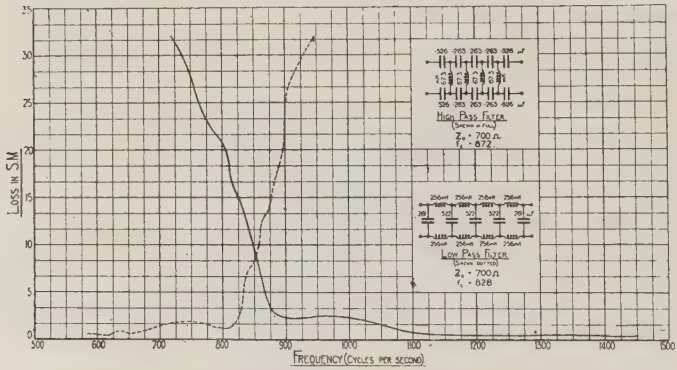

Fig. 536. High and Low Pass Filters Showing Cut-offs

pass the whole telegraph signal; and the extent to which they cut off the signal may be looked upon as due to the time that elapses after the application of the signal before the full current builds up in the filter. This is known as the transient time, and has been shown by Kupfmuller * to be equal to $\frac{\cdot 87}{f_1 - f_2}$. He has also shown that signals may be received when the transient time is from one to one and a half times the duration of a dot. With a transient time equal to twice the dot time, signals are unreadable. There is, therefore, a direct relation between filter band breadth and speed of signalling; and, since band breadth clearly governs the spacing of the channels with any particular line or cable, the speed of signalling and number of channels are closely connected.

* *Electrische Nachrichten Tecknik*, 1924, Vol. 1, Part 6.

W. Cruickshank* has shown that a very simple relation exists between the speed of working and the width of the band, viz. the number of dot elements per second $x = 1{\cdot}25 \times$ band width in cycles. For example, a channel working at 595, with a passable width 510 to 680, has a band width of 170 cycles per second. Theoretically, the filter should allow 212 dots per second to pass, which is equal to a frequency of 106 or about 265 words per minute. Something a good deal less than this speed will be obtained in practice owing to line transients, interference between frequencies, and rectification losses.

It may be well to state that every coil-loaded cable has similar properties to a filter, and the higher frequencies involved in the transmission of speech are cut off. This produces slight distortion, which passes unnoticed during telephone conversations, but it renders such circuits unsuitable for the transmission of music. The fact that a heavily loaded coil line eliminates all frequencies over 2500 places an upper limit on the value of the highest frequency which can be used on a voice-frequency channel.

PART II—SYSTEMS

SIEMENS AND HALSKE SYSTEM

The design provides for six sending channels on one pair of wires, and six receiving channels on another pair. The equipment is mounted on two racks, one sending and one receiving ; and, with the exception of the batteries, each rack is self-contained (Figs. 537 and 538). The lines to and from existing telegraph sets are terminated on a connection frame on the racks ; the ordinary outgoing telegraph signals operate the sending relays ; the receiving relays transmit the incoming signals to the telegraph sets.

Sending End. Oscillations are generated by means of three electrode valves with a reactance coupling

* "Voice Frequency Telegraphs," *Journal I.E.E.*, Vol. 67, p. 816.

between their grid and plate circuits. The reactance constants are so selected that, when the heating and plate batteries are switched on, the circuits 1–6 will

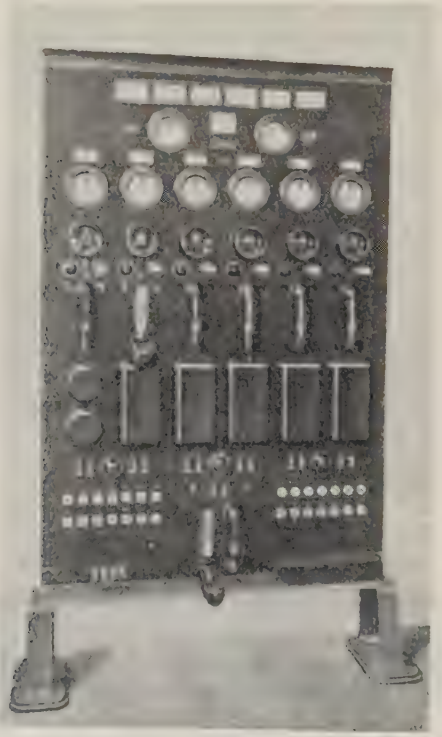

Fig. 537. Siemens and Halske: Sending Rack

oscillate continuously at frequencies of respectively—

$$\frac{2500}{2\pi} \cdot \frac{4000}{2\pi} \cdot \frac{5500}{2\pi} \cdot \frac{7000}{2\pi} \cdot \frac{8500}{2\pi} \cdot \frac{10000}{2\pi}$$

The direct current signals, which, when the six keys are operated, arrive from the six transmitting

instruments situated in the telegraph instrument room, traverse 300 ohm resistances, the galvanometers and both windings of the telegraph relays *TR* to earth.

Fig. 538. Siemens and Halske: Receiving Rack

(See Fig. 539.) In each case the telegraph relay is actuated, the tongue being carried over to marking. This closes the secondary of the oscillatory circuit, and energy is taken from the amplitude resistance, part of which is included in the common grid circuit of the sending amplifying valve. The energy thus taken is

carried to the grid and, similarly, energy is imparted to the grid from the other oscillatory circuits. It will be seen that the six amplitude resistances are in series on the grid of the amplifying valve. The amplified oscillations are passed to line from the anode via an output transformer, the secondary of which is coupled to the primary of a toroidal transformer by a distortionless line. The secondary of this transformer is connected to the sending voice-frequency loop, and the centre point is taken to one side of the secondary of a superposing transformer.

An adjustable iron plunger is capable of projection into the hollow centre of the reactance coils. Its movement, which is controlled by a knob on the front of the frame, increases the amount of iron which projects into the coils and, therefore, slightly lowers the frequency. This adjustment allows for any slight divergence between the frequency actually generated and the point of maximum admittance in the corresponding band-pass filter at the receiving end.

Receiving End. The amalgamation of frequencies transmitted over the loop connecting the two offices is received on the primary of a toroidal transformer, and reaches the grid of the receiving amplifying valve via the secondary and the input transformer. The alternating currents thus received are amplified and pass via the output transformer to the several band-pass filters. Each frequency is passed by its respective filter and reaches the grid of the rectifying valve via an input transformer, the secondary of which is shunted with a high resistance of the grid leak type. The alternating current is rectified in the valve, the circuit of the rectified current being from high-tension positive, the primary of the output transformer, anode galvanometer, anode to filament. Across the primary is a condenser, the function of which is to by-pass the alternating current component of the rectified current. The initial rise of the current in the primary induces

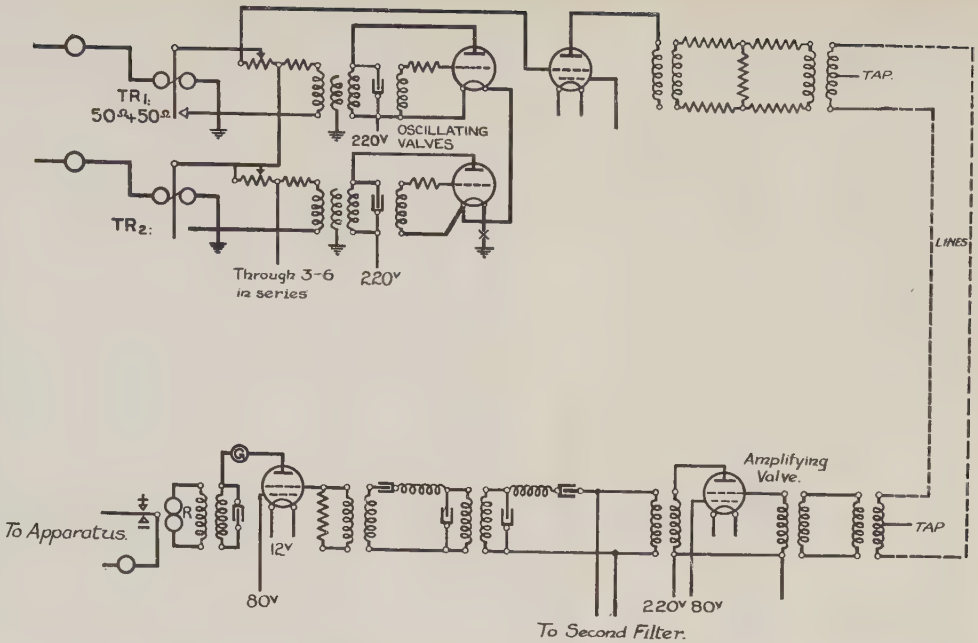

FIG. 539. SIEMENS AND HALSKE: TWO SENDERS SHOWN

an impulse in the secondary, which actuates the receiving telegraph relay connected across its terminals. When the current in the primary decreases in value, an impulse in the opposite direction restores the relay tongue to spacing. It is obvious that under those conditions the relay must be adjusted neutrally for satisfactory working.

Telephone-speaking System. For the purpose of service communication between the two-voice frequency stations, a superposed circuit is formed across the two-voice frequency loops. By means of a switch a ringing current can be applied either to the superposed line or to the telegraph room and, similarly, a hand telephone set terminated on a plug can be connected to either point.

Battery Supply. One End—

Filaments 24^{v} :

Two groups of three oscillating valves in series.

One group of two amplifying valves. (One sending reserve.)

Six rectifying valves separately heated.

One group of two receiving amplifying valves. (One reserve.)

Current consumption, 10·8 amp. + 0·49 amp. per alarm.

Anodes, 220^{v} : Current consumption, 0·090–0·120 amp.

Space charge grids : 80^{v} tap : Consumption, 0·44–0·47 amp.

Grid priming, 2–20^{v} : Negligible current.

Supplementary Safeguards and Alarms—

(*a*) Telegraph relay tests for neutrality.

(*b*) Earthed screen for couplings and oscillating valves.

(*c*) Measuring voltmeter and ammeters.

(*d*) Complete fusing scheme.

(*e*) Alarm relays to indicate failure of filament, anode and space charge currents. Duplicate valves are fitted on common points. If one fails, the other is brought in automatically.

(*f*) In series groups, equivalent resistance is brought in circuit to replace broken filament.

(*g*) In addition to bell alarm, lamps light behind frosted windows which bear name of circuit.

(*h*) Ringing facilities with cut-off relays are provided to maintain communication between telegraph instrument room and attendant.

The telegraph sending relays ($50^{\omega} + 50^{\omega}$) repeat Wheatstone signals at 150 words per minute with 36 mA ; the receiving relays ($500^{\omega} + 500^{\omega}$) repeat Wheatstone signals at 150 words per minute with 4 mA.

The amplifying and rectifying valves are 4-electrode valves (type OR) with two grids, which are used in the manner first introduced by Langmuir. The 4-electrode valve behaves as a low impedance power valve with a relatively large consumption of current via the space charge grid.

WESTERN ELECTRIC CO.'S SYSTEM

The main differences between this system and the one just described lie in the method of producing the alternating E.M.F.'s, and in the use of sending, as well as receiving filters. Instead of using oscillating valves as sources, the American company has designed an inductor alternator, suitably governed for speed control, in which the various frequencies required by the system are produced. This arrangement has the advantage that one machine can be used as a source of energy for the whole office. It is understood that a current of 40 mA, at a terminal voltage for each frequency of about $0{\cdot}7^{v}$, can be taken from the machine, and that the current output can be varied within wide limits without appreciably affecting the speed. The motor is driven from a 24^{v} battery, which also supplies current to the two field coils of the alternator, which are common to all the stators. The rotor consists of ten soft iron discs mounted and equally spaced on a common shaft. Round the periphery of the discs a number of slots are cut, the number depending on the frequency required. On the pole arc of each stator, facing its associated disc, is cut a corresponding number of slots, and in these slots the stator windings are fitted. The flux in any stator tooth is a maximum when a rotor tooth is opposite it, and is least when a slot is opposite.

The varying flux induces voltages in the stator windings, which are tapped off to the sending circuits.

Sending End. The sending relay armature normally short-circuits the sending filter, but when the relay tongue moves off the spacing stop, the alternating current passes into the filter. After passing through the filter, which is designed to pass only frequencies within a narrow band on either side of the generated frequency, the current is combined with the currents from the other channels, and the complex wave is impressed on the line through an amplifier (Fig. 540).

Receiving End. After amplification by the common line amplifier, the mixed currents are impressed on the receiving filters which are connected in parallel. Each filter passes only the narrow band allotted to its own channel, and has practically an infinite impedance to other frequencies. The individual current frequency is then amplified alone, rectified, and operates the receiving telegraph relay. A special device, called an accelerating or "kick" circuit, has been tried to improve the operation of the receiving relay. A transformer is introduced, the high voltage side of which is connected in series with the anode of the rectifier valve and with a winding on the relay. The low voltage side is connected to the other winding of the relay, and as long as the current is in the high voltage side, no current flows in the low voltage side. If, however, the anode current changes suddenly at the beginning or the end of a signal, a comparatively large rush of current takes place in the operating winding, which causes the relay armature to move promptly and positively.

The frequencies used on the first installation on the New York-Pittsburg circuit were ten in number, ranging from 425 to 1955 cycles per second in steps of 170, but these have now been increased to twelve by means of two extra steps on the higher side. To convert a 4-wire telephone circuit to voice-frequency telegraphs, the terminal hybrid coils and balances are disconnected

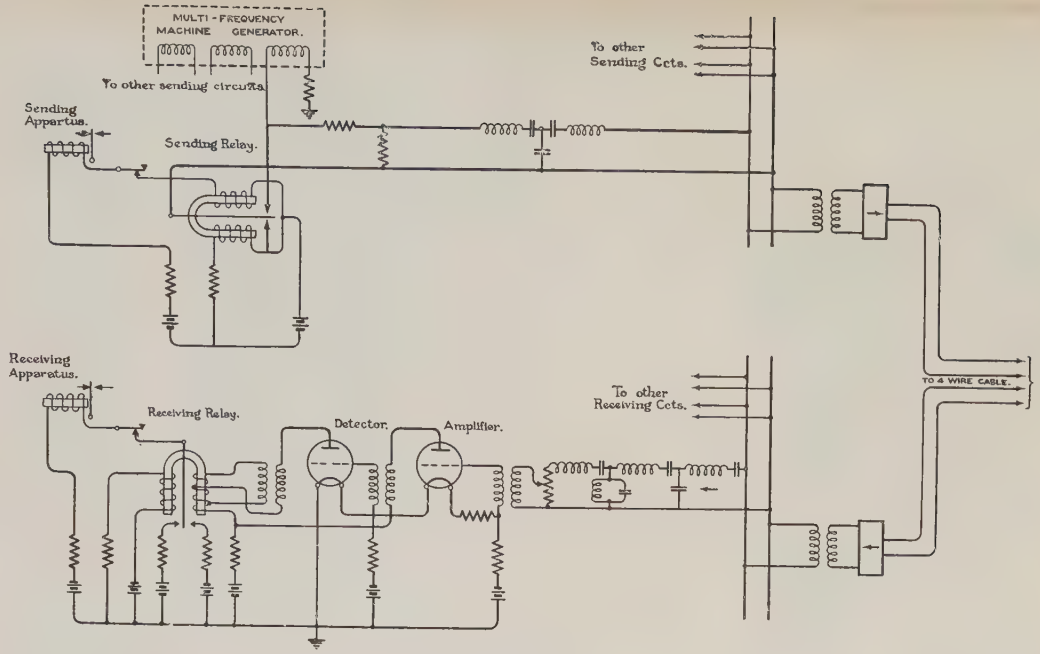

FIG. 540. WESTERN ELECTRIC SYSTEM
Two senders and two receivers shown

from the two pairs, and the telegraph senders connected to one pair and the telegraph receivers to the other pair. The 4-wire repeaters along the cable function as before.

Current Consumption.

		Motor drive and stator fields
Inductor alternator	24v.	3·5 amp.
Filaments	24v.	0·5 amp. per channel.
Plate circuits	125–135v.	0·015 amp. per channel.
Grid priming	24v.	Negligible.

THE GENERAL ELECTRIC CO.'S SYSTEM

A 6-channel voice frequency system specially designed to meet Post Office requirements has been developed by the General Electric Co. in co-operation with the Post Office Engineering Department, for use on 4-wire telephone cables of the type provided in this country. The frequencies used in each direction are the same as those of Siemens and Halske, increasing from 2500 by steps of 1500. The source of current for each frequency is a valve maintained tuning-fork. The tuning-fork is mounted on a massive brass base, which rests upon a thick slab of Sorbo rubber to provide mechanical insulation. Polarization is effected by an electro-magnet, and the complete tuning-fork unit, excluding the tuning-forks which, of course, vary in length for the different frequencies, but including anode, grid, and output coils, is similar for all frequencies, the support for the tuning-fork proper being adjustable to deal with tuning-forks of different length.

It is said to have been found possible to obtain a sufficient output free enough from harmonics to provide for transmission to the line direct without the use of filters. The tuning-fork unit itself is readily detachable for test or replacement, and the necessary condensers for anode and grid coils are fitted in the tuning-fork mounting.

Fig. 541. General Electric Co. Fork Unit

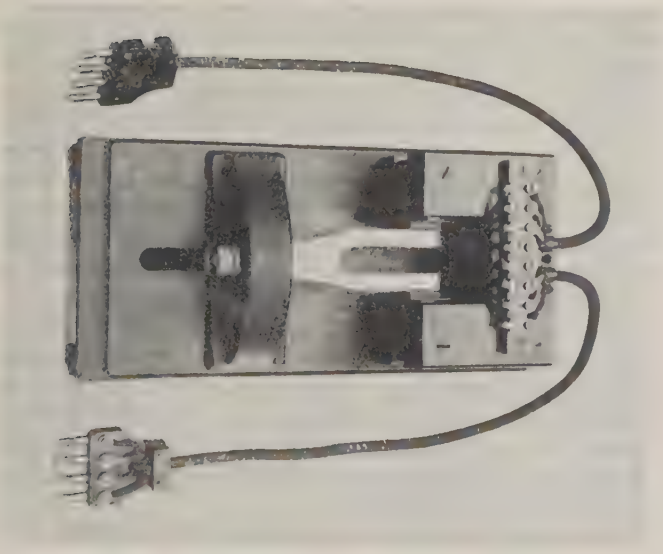

Fig. 542. General Electric Co. Fork Unit
Showing fork fixing and clearances

The receiving unit consists of an amplifying valve and a rectifying valve, the latter being coupled through a transformer to a relay standard *B*. The receiver unit is the same for all frequencies.

Fig. 542 shows a view from above of the unit for $\omega = 10{,}000$, the spring plate which holds the coils in position having been removed to show the clearances adopted. Fig. 544 gives a general idea of the complete system.

The transmitting frequencies are applied to the input windings of six input transformers, whose secondaries are coupled in series to the grid of the transmitting master amplifier (Fig. 543).

At the receiving end the incoming signals pass through the receiving master amplifier to the input side of six band filters connected in parallel. The output of each filter is again amplified and then rectified to operate a telegraph relay standard *B* transmitting to the local telegraph circuit. An artificial non-reactive cable at the transmitting end and a potentiometer at the receiving end (whose impedance is equal to that of the characteristic impedance of the line) (Fig. 543) provide for any necessary adjustment in transmission level of the mixed frequencies. Provision is made for voltage adjustment of each transmitting frequency at the sending end by a potentiometer in series with the telegraph relay contacts, and at the receiving end by a potentiometer across the output of the filter.

The valves used for the master amplifiers and for the tuning-fork units are the P.O. valves, thermionic, No. 25. The receiving unit amplifier and rectifier are respectively valves L.S.5.B and L.S.5.A, both of which operate on the same filament and plate voltages as the valves, thermionic, No. 25, and are readily obtainable in the open market.

Branching jacks, in conjunction with a valve voltmeter, enable the respective voltages at various points in the circuits to be adjusted as required. The voltage

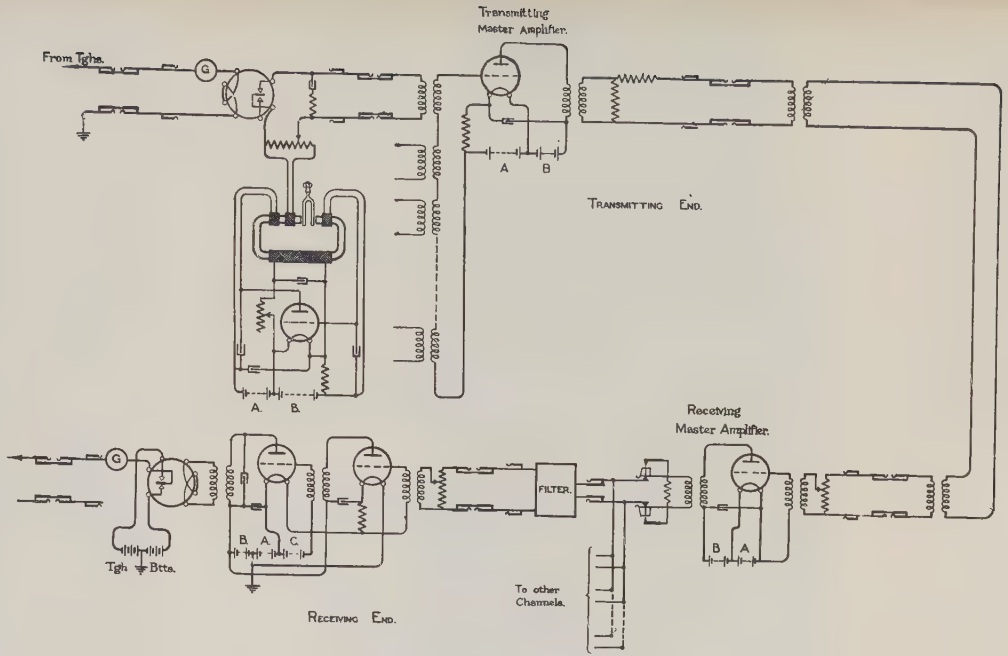

FIG. 543. GENERAL ELECTRIC CO.'S SYSTEM
Skeleton connections

from each tuning fork unit applied to its input transformer is of the order of 0·12^{v}. The voltage of each frequency as applied to the input of its receiving filter is of the order of 1^{v}. Under these conditions, operating on artificial lines, each of the six channels can handle

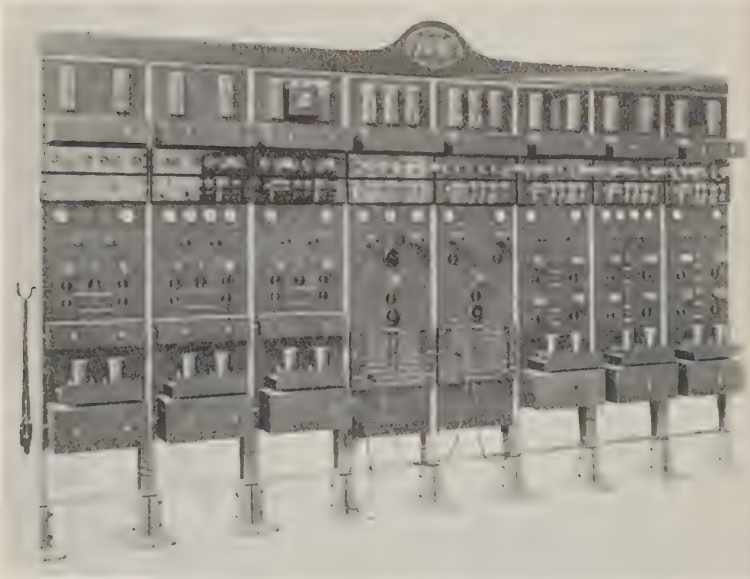

Fig. 544. General Electric Co.'s System
Sending and receiving rack with test panels in the centre

about 150 words a minute Wheatstone, which is well above the requirements of a quadruple Baudot simplex.

A considerable improvement in the operating of the system, both in stability and in speed, has been obtained by the use of the standard Post Office relay fitted with flexible tongue contacts, which was suggested to the Company by the Research Section of the Engineer-in-Chief's Office. The armature of the ordinary standard relay is predisposed to chatter on its contacts before it

settles down for a mark or space, which in a voice-frequency telegraph system may produce disconcerting transient effects. The system is now in operation between London and Glasgow with satisfactory results.

THE SELT SYSTEM

This is a system which works in both directions, four channels being used in each direction on a loaded pair of wires. The frequencies used are 5000, 7000, 9000, and 11,000 in one direction, and 6000, 8000, 10,000, and 12,000 radians in the other. The line is balanced in a similar manner to that used in 2-wire repeater telephone systems, so that the outgoing signals may not interfere with the incoming ones (Fig. 545).

Sending. Valve oscillators are used as generators. The oscillations are transmitted to a common circuit by means of a transformer, in the secondary of which is interposed the tongue and contact of a Baudot relay, which is operated by signals from the telegraph office. The four oscillators are grouped in parallel and, in order to prevent appreciable deviation in any one, a large resistance is interposed between each of them and the common circuit. The receiving master amplifier is joined to the centres of the balance, hence this is not affected by the outgoing trains of signals.

Receiving. The receiving apparatus is made up of a master amplifier and two stages of individual channel reception. The first stage is one of selected amplification, in which the following conditions are fulfilled—

(*a*) A high selectivity and sensitivity for the required frequency ;

(*b*) A low time-constant to permit high-speed reception without distortion ; and

(*c*) A high input impedance to frequencies other than itself.

In this stage the plate circuit is tuned to its proper frequency, and reaction is used to strengthen the trains of that frequency and to offer high impedance to the

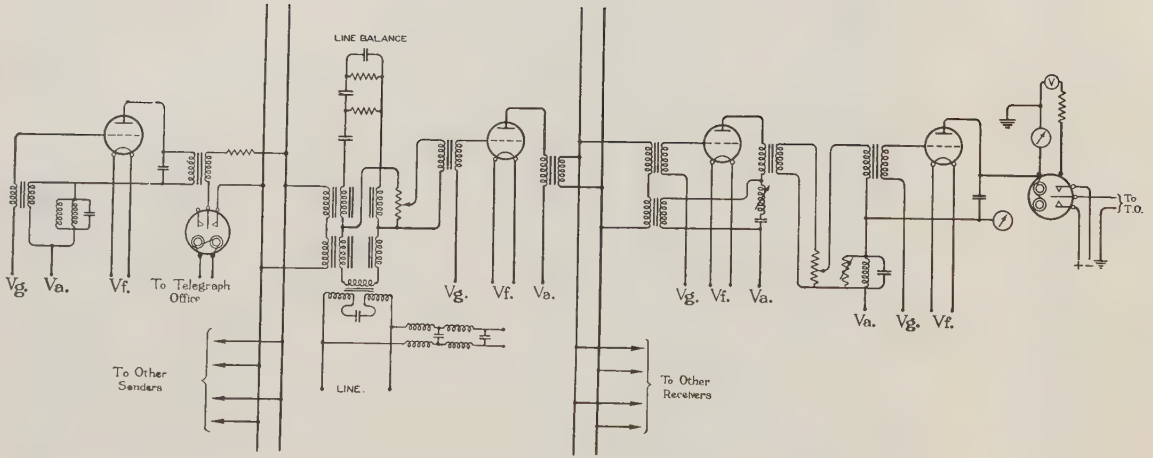

FIG. 545. SELT SYSTEM

others. The second stage is also tuned and is primed to act as an amplifier rectifier. In the plate circuit is connected one coil of a Baudot relay, the other coil of which is connected through an adjusting resistance to a 40^{v} bias battery for the purpose of maintaining the tongue against the spacing contact and restoring it thereto when the signal ceases.

THE WALD SYSTEM

This system is in use in Austria and is remarkable for its simplicity and the entirely different manner in

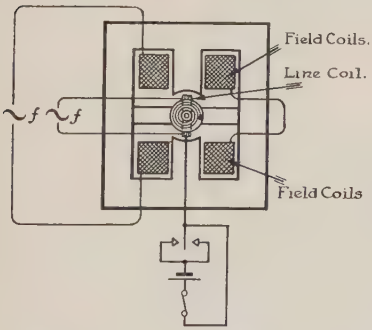

FIG. 546. DYNAMOMETER TYPE OF RELAY WITH BATTERY AND RECEIVER IN THE LOCAL CIRCUIT

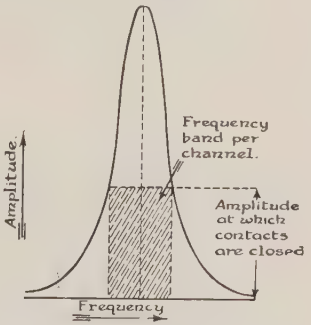

FIG. 547. CURVE ILLUSTRATING SELECTIVITY

which the frequency selection is effected. In brief, it consists essentially in the use of relays of the dynamometer type. The complex frequencies in the line circuit pass through one coil of the relay, Fig. 546, the other, or field coil, being supplied locally with current at the frequency it is desired to select. When alternating current at f cycles per second is flowing in both coils, the tongue of the relay follows the current and the contacts are closed as shown in the torque curve (Fig. 548). By using two relays with their field coils supplied with alternating current at the same

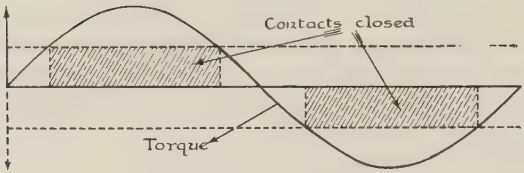

FIG. 548. TORQUE CURVE

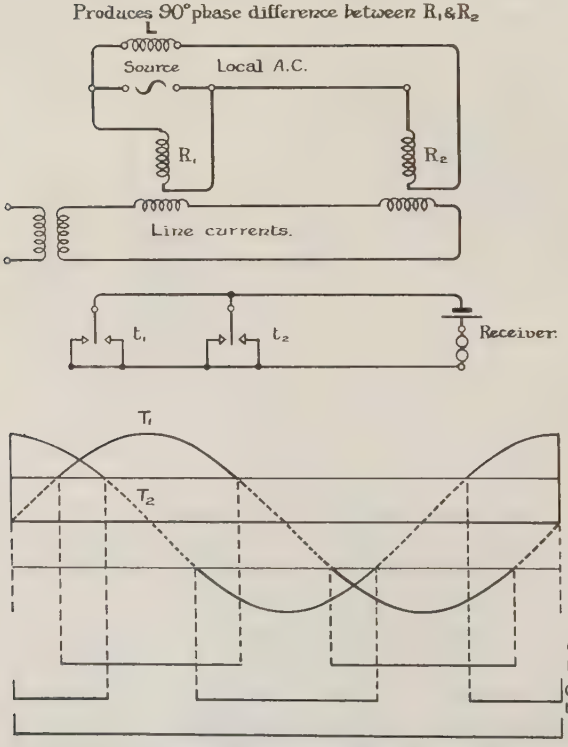

FIG. 549. ARRANGEMENT OF RELAYS AND RESULTANT CLOSURES OF LOCAL CIRCUITS

frequency but differing by 90° in phase, the conditions shown in Fig. 549 are obtained. Hence, the local circuit is kept constantly closed during the continuance

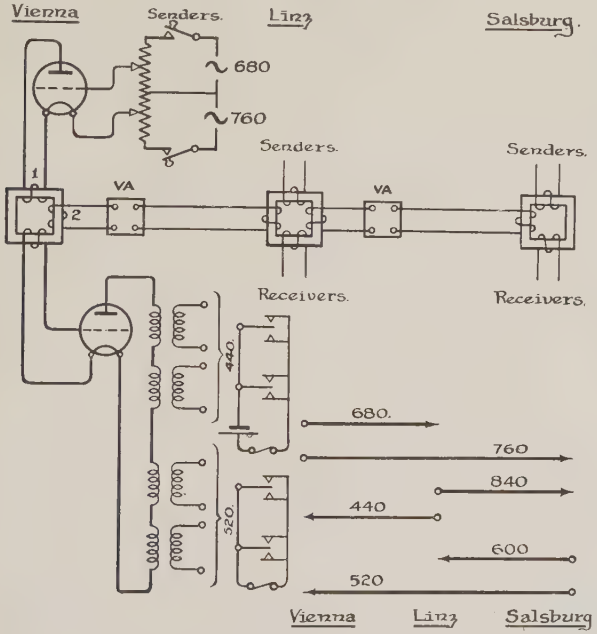

FIG. 550. SCHEMATIC DIAGRAM OF CHANNELS BETWEEN VIENNA, LINZ, AND SALSBURG

of a signal while the relays are vibrating in response to the incoming alternations.

A schematic diagram of the circuit between Vienna, Linz, and Salsburg* is shown in Fig. 550, together with the channels obtained.

CONCLUSION

Although often spoken of as a carrier or wired-wireless system, the voice-frequency telegraph does not use a carrier frequency in the sense in which the

* *Electrische Nachrichten Technik*, October, 1928.

term is used in radio work and in wired-wireless telephony. It is true that each local oscillating source of energy is of the continuous wave type ; but, when any individual channel is sending, the signals are transmitted from the source by the single frequency without modulation. When more than one channel is sending, however, the wave shape becomes complex. The fact that the alternating current wave is impressed on the line when a signal is sent, produces two phenomena which are antagonistic and irreconcilable. In order to secure high speeds of working, it is essential that the wave should build up rapidly and collapse quickly at the cessation of the signal ; if, however, the building-up process be too rapid and the wave front steep, serious transient effects are produced which encroach on the space bands between adjoining frequencies. When an E.M.F. is impressed on a circuit, the resultant current wave contains many frequencies besides the fundamental, and the lower harmonics of a low fundamental may be of sufficient amplitude and be near enough to the higher working fundamentals to cause interference and consequent distortion. In the American system these effects are minimized by the insertion of filters at the sending end in each frequency channel ; Siemens and Halske had to follow this practice in their duplex system to ensure a good duplex balance. In the German 6-channel one-direction system already described, the frequencies were wide enough apart to function without disturbance ; but when the range was narrowed to increase the number of channels, filters with loose inductive couplings had to be used to maintain the high speed of the 6-channel system.

POST OFFICE RESEARCH*

Duplex. The problem of duplexing a voice frequency circuit is similar to that involved in telephone 2-wire

* "Voice Frequency Telegraphs," by W. Cruickshank, *Proc. I.E.E.*, Vol. 67, p. 823.

repeating circuits, and it has been demonstrated that at least ten channels at 100 words per minute can be obtained over a loaded 40-lb. conductor loop 100 miles long, without the intervention of a repeater. No duplex circuit is in actual operation in this country.

Single Channel High-speed Circuit. A system of voice frequency telegraph has been developed by the Post Office, which worked at 300 words per minute between London and Grimsby on a light gauge loaded telephone circuit. On an experimental circuit, Dollis Hill–Catterick–Dollis Hill–Grantham–Dollis Hill, a distance of 864 miles, a Western Electric multiplex, running at 240 r.p.m., gave perfect reception on the four arms, and no difficulty was found in maintaining this speed. In the circuit, telephone repeaters functioned at TSX, Fenny Stratford, Derby, and Leeds. The voltage impressed on the line at the sending end was 0·25^{v}.

The circuit connections are shown in Figs. 551 and 552.

Sending. A valve-controlled tuning fork is used for generating oscillations at a frequency of 1275 cycles per second. The vibrations of the fork are controlled by a D.E.5*b* valve, the control coils in the grid and anode circuit consisting of the magnet and coils of a 4000 ohms headgear receiver tuned by the necessary capacity. A condenser is inserted in series with the anode coil, the high tension being fed to the valve through a choke coil. The control valve is coupled to the grid of an amplifying valve (D.E.5) by a condenser of suitable value, grid bias being fed to the grid through a tuned circuit. The anode battery is fed to the amplifying valve through a choke coil and a tuned circuit, the primary of a transformer 4006 A. being connected across the latter. A 2 μF condenser is in series with each wire of the transformer to prevent direct current from flowing through the transformer primary. The secondary of the transformer is shunted by resistances for varying the output, and short-circuited by the

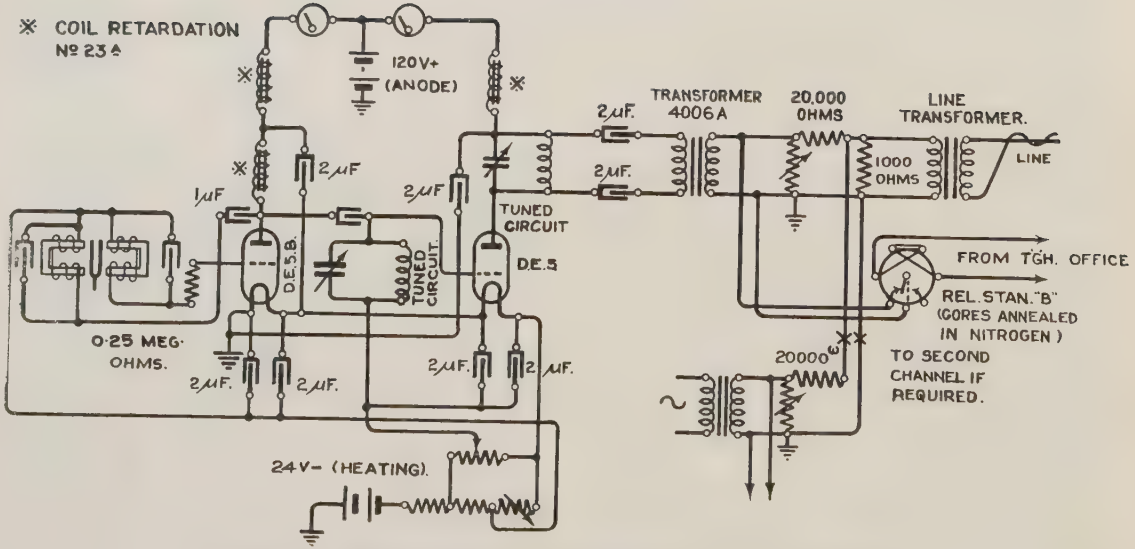

FIG. 551. SINGLE CHANNEL HIGH-SPEED CIRCUIT– SENDING END

tongue and spacing stop of a Post Office Standard "B" relay modified to suit the present conditions. The line-transformer is connected across the 1000 ohms resistance. It will be seen from the foregoing that when the telegraph relay is operated by direct-currents rom the telegraph office, the short circuit is removed from the output circuit as soon as the tongue leaves the spacing stop, and alternating voltage is impressed on the line for the period of time that the relay tongue is kept off the spacing contact. As soon, however, as the tongue is restored to the spacing stop, the output is again short-circuited. It is extremely important that no chatter should take place at the relay contacts, as this produces split signals and extras, and also that the relay should remain neutral when once set. To ensure this, a Post Office Standard Relay "B" fitted with a flexible spring tongue and having cores annealed in nitrogen is used.

Receiving. The incoming voice-frequency loop is connected via the line transformer to a potentiometer, the impedance of which will depend upon the type of line associated with it. Across the potentiometer is the primary of an input transformer, the secondary of which is connected to the grid of an amplifying valve (D.E.5), suitable grid priming being connected to the other end of the secondary. The anode battery is fed to this valve through the primaries of two Marconi "Ideal" transformers, 1–6 ratio, joined in parallel, suitable grid priming being applied to the grids of two rectifying valves (D.E.5B) through the secondaries connected in series between the grids. It will be seen, therefore, that a "push pull" arrangement exists, and that both halves of the wave are rectified. The anodes of the two rectifying valves are commoned, and the anode battery is fed through a megohm resistance across which is connected a by-pass condenser ·004 m.f. to by-pass the alternating component of the rectified current. The junction of the plate and the megohm

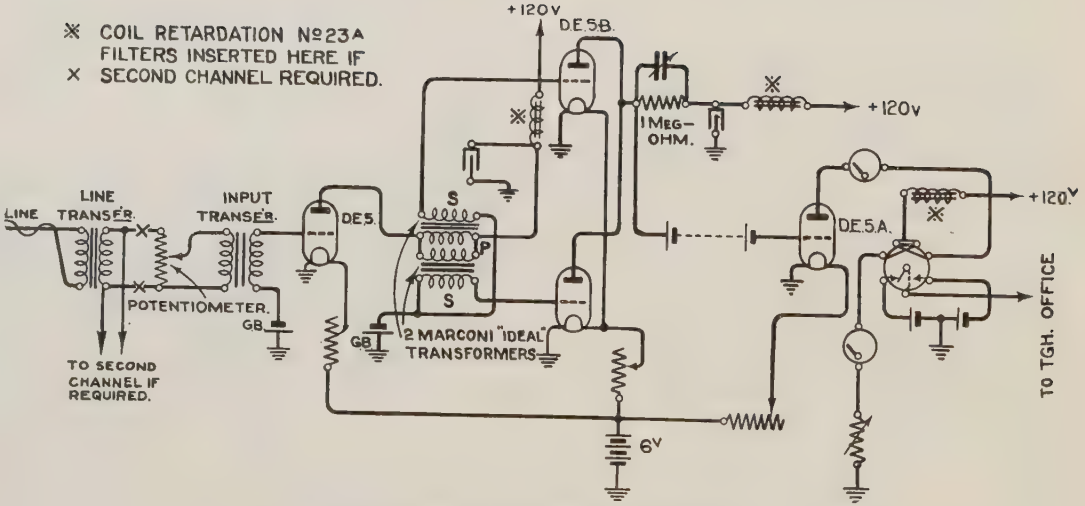

FIG. 552. SINGLE CHANNEL HIGH-SPEED CIRCUIT—RECEIVING END

resistance is coupled to the grid of another valve (D.E.5A), termed the relay control valve, by a battery, the voltage being of such a value that the correct priming is given to the grid of the relay control valve. The positive pole is connected to the junction of the plate and megohm resistance, and the negative to the grid of the relay control valve. The anode battery for this valve is connected to the differential point of a Post Office Standard "B" relay, and is so coupled to the plate through one of the relay coils, i.e. to U-circle, that the emission of the valve passes through one coil of the relay in a spacing direction. Current from the anode battery also passes through the other coil of the relay in a marking direction, through an adjustable resistance connected to *D* of the relay and to earth. The marking current is so regulated that its value is half that of the current in the spacing coil due to the emission of the valve. Obviously the marking current is steady and does not vary as long as the anode battery is kept constant. Whilst the valve is emitting, the relay is held over to spacing. When no alternating current is being impressed on the line, and consequently the amplifying and rectifying valves are controlled by their negative grid bias, the relay control valve is conductive. When, however, the transmitting relay is operated and alternating current is impressed on the line, the rectifying valves become conductive, resulting in the anode becoming less positive; and, therefore, the grid of the relay control valve becomes more negative, suppressing or reducing the emission of the valve. Providing that the emission be reduced to a lower value than the current in the marking coil, the relay is operated. As soon as the alternating current on the line ceases, the relay control valve again becomes conductive and the relay tongue is restored to the spacing contact. This method of reception is used at the Radio Receiving Station at St. Albans.

The four valves of the receiving unit are heated in

parallel from a 6^{v} battery. This is necessary, as the heating of the two rectifying valves is critical and requires a separate filament control. The receiving telegraph relay is similar to that used in the transmitting circuit. An earthed battery is connected to the battery contacts, for repeating the signals to the telegraph office via the tongue.

CHAPTER XX

SIMULTANEOUS TELEGRAPH AND TELEPHONE WORKING

Superposing. There are several systems by which a telephone circuit may be used for simultaneous telegraph and telephone work. The Van Rysselberghe system, which enables two telegraph circuits to be obtained from a metallic telephone circuit, is shown in Fig. 553, the telegraph apparatus at F and G being arranged precisely as that at C and D.

The principle of the system consists in slowing down the rate at which the telegraph currents rise and fall to such an extent that no audible effect is produced upon the telephone receivers, whilst the telephone speaking currents are, of course, so small as to be quite incapable of affecting the telegraph apparatus. In order to separate the two telegraph circuits, four condensers, each $\frac{1}{2}$ m.f. capacity, are inserted in the lines. Since the telephonic speaking currents are of a rapidly alternating character, the interposition of these condensers does not appreciably affect the talking between the telephones at A and B. An inductance termed a " graduator " (Fig. 553) is inserted between the centre of the key and the line, whilst a second and similar coil is joined between the battery and front stop of the key, a 2 m.f. condenser being connected between the centre of the key and earth. When the key is depressed the battery commences to charge the condenser and the difference of potential between the centre of the key and earth rises slowly, while the graduator in the line circuit tends still further to reduce the rate at which the current increases. The current therefore rises very slowly, and the portion which passes through the nearer condenser, telephone A, condenser and telegraph apparatus F upon the other

line while the current is rising, is far too small to affect the telegraph apparatus, and since it rises so slowly the telephone is likewise unaffected. Hence, the two telegraph circuits may be worked simultaneously upon the metallic loop without interference with telephonic speech or with each other.

The only point to be remarked is that, for calling purposes upon the telephone circuit, it is necessary to

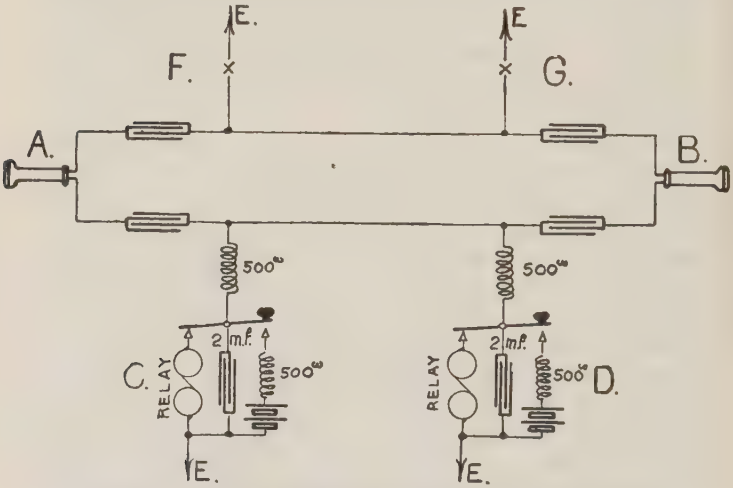

FIG. 553. VAN RYSSELBERGHE SYSTEM OF SIMULTANEOUS TELEGRAPH AND TELEPHONE WORKING

The apparatus at *F* and *G* is precisely similar to that at *C* and *D*

adopt a special device which will not affect the telegraph circuits as would the use of an ordinary generator. This is accomplished by the low frequency current from a small induction coil acting upon an extremely sensitive form of relay at the distant end.*

Successful results have been obtained in this country over circuits of roughly fifty miles in length with a modification of the arrangements of Fig. 553. The

* See Chapter IV, "Telegraph Switching Systems," by T. F. Purves.

apparatus at C, D, F, and G consisted of double current duplex sets worked with polarized sounders, a 10 m.f. condenser being connected across each set. The inductance coils used in place of the 500^{ω} graduator coils have a resistance of 40^{ω} with very high inductance, and instead of the lines being taken through condensers to the telephone a toroidal repeating coil (*q.v.*), having a 2 m.f. condenser in the centre of its secondary coil, is

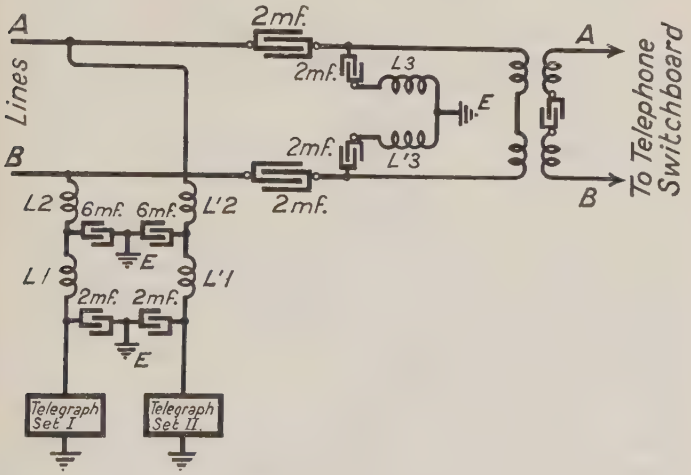

FIG. 554. AMERICAN COMPOSITE CIRCUIT

inserted, the primary being connected to the trunk switch section. In order to improve the ringing, which is by ordinary generator ringing current, the condenser normally associated with trunk-line calling relay is short circuited.

Composite Circuits.* The modern variant of Van Rysselberghe, developed in America, is termed a composite telegraph and telephone system. The capacities

* "Composite Telegraphy and Telephony on Open Wire Lines," by A. E. Thompson, *Electrical Communications*, Vol. 5, p. 250, April, 1927.

and inductances employed form filter circuits which can be subjected to mathematical analysis and can consequently be designed to obtain the maximum efficiency.

The frequencies used for telephone speech range between 100 and 2500 cycles per second, and the most important is round about 800. Morse signalling at 40 words per minute is approximately equivalent to 16 cycles per second, and it is because of the wide differences in the essential frequencies involved in telegraph and telephone transmission that the two systems can be separated into a higher frequency circuit for telephony and a lower frequency circuit for telegraphs.

The telephone line (Fig. 554) passes through 2 m.f. condensers inserted in the A and B lines, and these separate the two lines for direct currents. A toroidal repeating coil is also inserted on the switchboard side with a condenser placed in the centre of the windings. The 2 m.f. condensers and inductances L_3 and L^1_3 form filter circuits which offer practically zero resistance to an alternating current of the frequency used in Morse signalling.

The capacities and inductances inserted between each telegraph set and the line wire are designed to round off the current wave. Indeed at 25 cycles per second (62·5 words per minute) the wave becomes a sine curve plus its third harmonic. The condensers in the lines offer very high impedance to the slow alternations of the telegraph currents and any enfeebled current which passes them is shunted away to earth via L_3 or L^1_3.

So far as the telephone circuit is concerned, the inductances L_1, L_2, L^1_1 and L^1_2 offer high impedance, and the efficiency of the circuit is not seriously affected. It is necessary however to employ ringing current of 135 cycle frequency instead of the usual 16 cycle.

Two such circuits as shown in Fig. 554 will yield a third superposed or phantom telephone circuit. This

is connected between the central points of the repeating coils on the two loops. Hence, the two loops will provide three telephone speaking circuits and four telegraph circuits between the terminal points.

Composited circuits on long overhead loops have not proved entirely satisfactory in this country owing

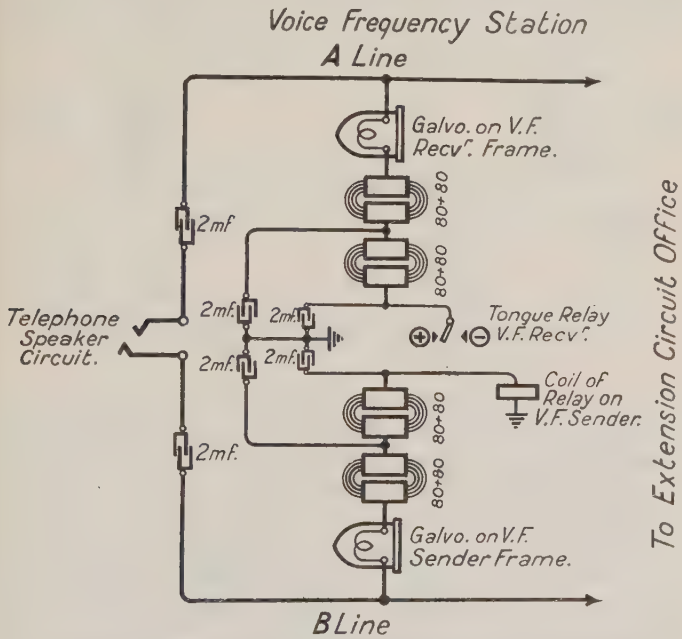

FIG. 555. COMPOSITE CIRCUIT BETWEEN VOICE FREQUENCY TERMINAL AND CHANNEL EXTENSION STATIONS

to the variability of the climate. Over comparatively short loops not exceeding 40 or 50 miles in length the arrangement works quite well. In other words, the system fails just where its economic advantages would be greatest.

An example of the application of these principles is shown in Fig. 555, where a composite arrangement is

used between the voice frequency terminal station and the office to which a channel is extended. In this way telephone communication is provided between the voice frequency office and the extension over the same pair of wires used for sending and receiving.

Superposing with Repeating Coils. One telegraph circuit can be worked over a metallic telephone circuit, without in any way affecting the arrangement of the

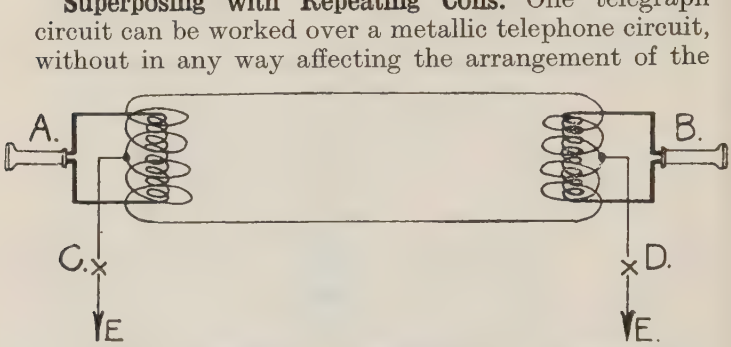

Fig. 556. A Telegraph Superposed upon a Telephone Circuit with Repeating Coils

telegraph apparatus or the system of ringing over the telephone loop. If the circuit is in perfect condition there will be no effect upon the telephones when the telegraph stations are working. There are two methods of arranging for superposing, one with the aid of transformers and the other by means of bridging coils.

A telephone circuit, conventionally depicted in Fig. 556, has a telegraph circuit superposed upon it by means of repeating coils (an induction coil of special design with a closed magnetic circuit formed by fine iron wires).

The speaking currents from A (Fig. 556) pass through the primary winding and induce corresponding currents in the secondary. These pass through the secondary at B and induce currents in the primary, so actuating the telephone at B. The speaking in the reverse direction (i.e. B to A) is effected similarly. The central points of the two secondaries are connected to telegraph

sets joined up in the ordinary manner. The telegraph currents from C divide equally through the two sides of the secondary, and as these two halves of the windings oppose each other the core of the repeating coils is not magnetized and therefore no E.M.F. is induced in the primary. The two halves of the total current pass along both lines in parallel, reunite at the centre of the coils at B, and pass through the apparatus at D

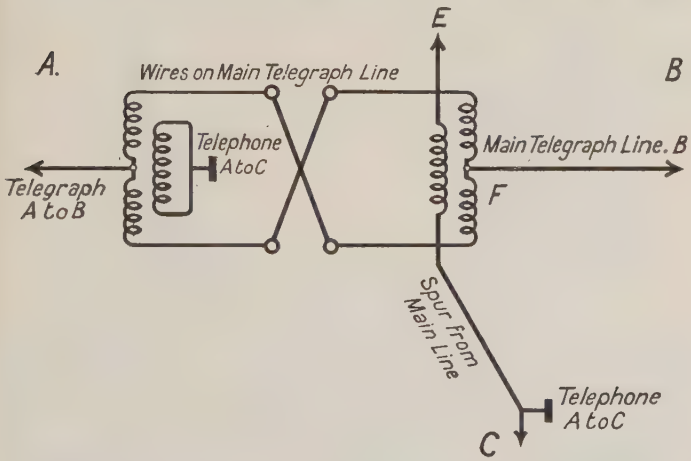

FIG. 557. A SINGLE WIRE TELEPHONE CIRCUIT COMBINED WITH A TELEGRAPHIC WIRE TO FORM A METALLIC TELEPHONE CIRCUIT UPON A MAIN TELEGRAPH LINE

to earth; consequently, there is no interference between the telephone and telegraph circuits.

The two lines must, however, be equal in conductor resistance, in insulation resistance, and in static capacity.

This system was utilized by W. J. Medlyn to combine a single wire telephone circuit and a telegraph circuit upon a main line route, so as to cut off the inductive disturbances upon the telephone circuit. In country districts, where there are neither electric tramways nor other telegraph and telephone circuits in the vicinity,

a single wire circuit is quite adequate for the transmission of messages over a short distance.

An example of such a circuit is given in Fig. 557, where the A—B telegraph circuit allied with a section of the A—C single wire telephone circuit provides a metallic telephone circuit between A and F with the telegraph superposed upon it. There is therefore only the inductive disturbance and earth current effects between C and F upon the line, and in many cases this

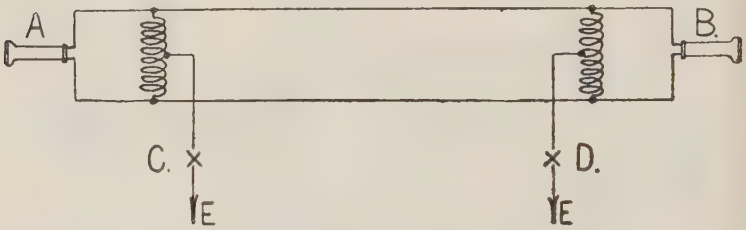

Fig. 558. A Telegraph Superposed upon a Telephone Circuit with Bridging Coils

is quite of an insignificant character. It is, however, necessary to cross the two wires so as to eliminate inductive disturbances from the other circuits working upon the main line between A and F.

Superposing with Bridging Coils. A telephone circuit upon which telegraph working is superposed by means of bridging coils is shown in Fig. 558.

This plan has the advantage that it avoids the insertion of repeating coils, but it carries with it the disadvantage that when the telephone circuit is extended to another trunk the latter will, if unbalanced due to slight defects, cause the telegraph currents to affect the telephone receivers.

Owing to the fact that the ringing current is derived from a dynamotor, which is also used to ring upon other circuits, it is necessary to prevent its direct connection to the trunk line. Many of the circuits upon which it is ringing have earth connections or

possibly actual faults so that the generator becomes partially earthed—on the common battery system one side of the generator is always to earth—hence, a portion of the ringing current would find its way through and produce interferences with the telegraph circuit. In order to avoid this, ringing current is applied through a transformer.

It should be stated that telegraph superposed circuits involve the abandonment of automatic signalling upon

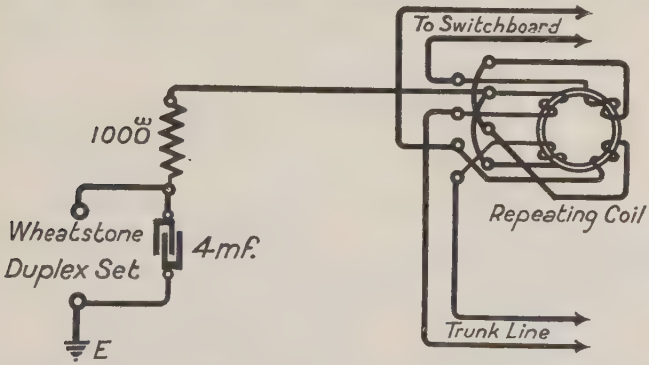

Fig. 559. Wheatstone Duplex Superposed on a Trunk Line

the trunk lines upon which they work and, as has been seen, involve the insertion of transformers at the terminal offices. In the case of offices with but one telegraph outlet the temporary abandonment of automatic signalling and the reduction of the speaking efficiency over the trunk line is far less serious than the total dislocation of the telegraphic traffic.

By either of the two methods considered any form of telegraph may be superposed upon a telephone loop. For example, a Steljes recorder or an A.B.C. may be superposed upon a terminated telephone circuit, e.g. a private wire telephone circuit.

An example of a Wheatstone duplex circuit superposed on a trunk line is illustrated in Fig. 559. A 1000ω

resistance coil is inserted in the line and the apparatus shunted by a 4 m.f. condenser.

Telegraph Superposed on Telegraph Loop. A Wheatstone circuit is sometimes worked round the loop with a key-worked duplex superposed (Fig. 560).

Consideration will show that, since the key duplex set is worked with an earth connection over both lines in parallel, the Wheatstone circuit must be worked from an individual or independent battery, and for this purpose a set of small secondary cells is provided for each circuit. It will also be realized that there is no inter-

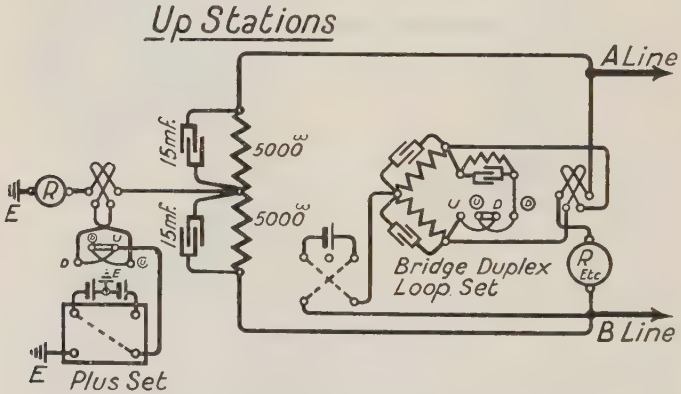

Fig. 560. Wheatstone Duplex Loop with Key Duplex Superposed

ference between the circuits, since the operation of the key circuit does not affect the difference of potential between the ends of the Wheatstone circuit, nor does the latter, working round the loop, affect the earth-connected duplex. The duplex is known as a "plus circuit."

Four telegraph circuits (three loop and one earth return) can be obtained on a four-wire cable by the arrangements indicated in Fig. 561. The sets L_1 and L_2 work round loops 1 and 2 respectively. P_1 uses

loop 1 as A wire loop, 2 as B wire and EP_2 uses all four wires in parallel and earth return. If the electrical constants of the wires are well balanced, no interference between the sets will occur.

Between London and Penzance, in emergency, seven telegraph circuits were obtained by superposing on four physical loops of the cable.*

SUB-AUDIO TELEGRAPHY†

This system is the modern development of the Van Rysselberghe arrangement. It is a method of com-

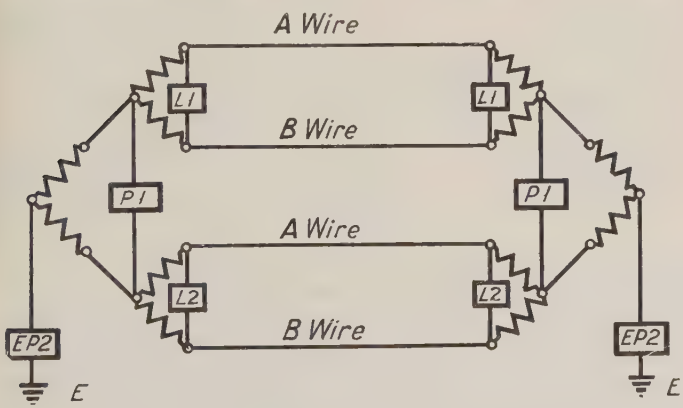

Fig. 561. Three Loop and One Earthed Circuit on 4-wire Cable Circuit

positing a telegraph circuit on a telephone loop or loops. From an alternating-current point of view, all important telegraph frequencies are below voice range, and that is why the system is sometimes called infra-acoustic working. It relies on the fact that speech

* "Telegraph Superposing on Underground Cables," by A. C. Booth, *P.O.E.E. Journal*, Vol. xviii, p. 115.

† "Die Telegraphie auf Fernkabeln, mit besonderer Berueck-sichtigung der Unterlagerungs und Impulstelegraphie," by A. Jipp and H. Nottebrock, in *Telegraphen und Fernsprech Technik*, August, 1928, p. 228.

frequency range is from 0 to 2000 cycles of which the band 300 to 2000 is sufficient, hence the band 0 to 300 is available for telegraphy. High and low pass filters are used. Fig. 562 serves to visualize the behaviour of a loop carrying telegraph signals and telephone speech.

In the system being developed by the Post Office, the low pass filter is arranged to have a cut-off frequency of about 40 cycles, its function being to keep the telegraph signals well within the sub-audio ranges. Incidentally, 40 cycles represents about 100 words per minute, and

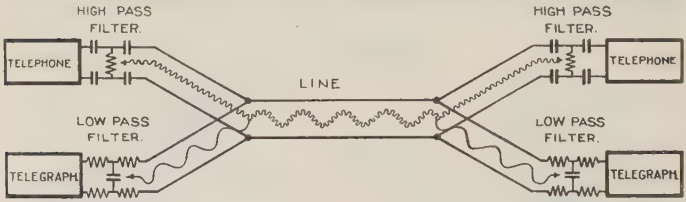

Fig. 562. Principle of Sub-audio Telegraphy

this is the maximum theoretical speed that the filter will pass. In practice, however, the speed obtained is lower.

The high pass filter has a cut-off frequency of 200 cycles, and its purpose is to prevent the telegraph currents from interfering with the telephone circuit.

A diagram of a typical set is shown in Fig. 563. The low pass filter is necessary at the receiving end, as the movement of the relay armature generates an E.M.F. of similar frequency to that of the transmitter, and would cause noise in the telephone unless blocked out. In this arrangement two pairs are used, one for sending and one for receiving, and the scheme is really double simplex working.

In the diagram double commutation is shown, but single commutation gives higher speeds. All the relays are fitted with spark quench circuits. This prevents sparking, and the resulting clicks which would normally result, from interfering with the telephone circuit.

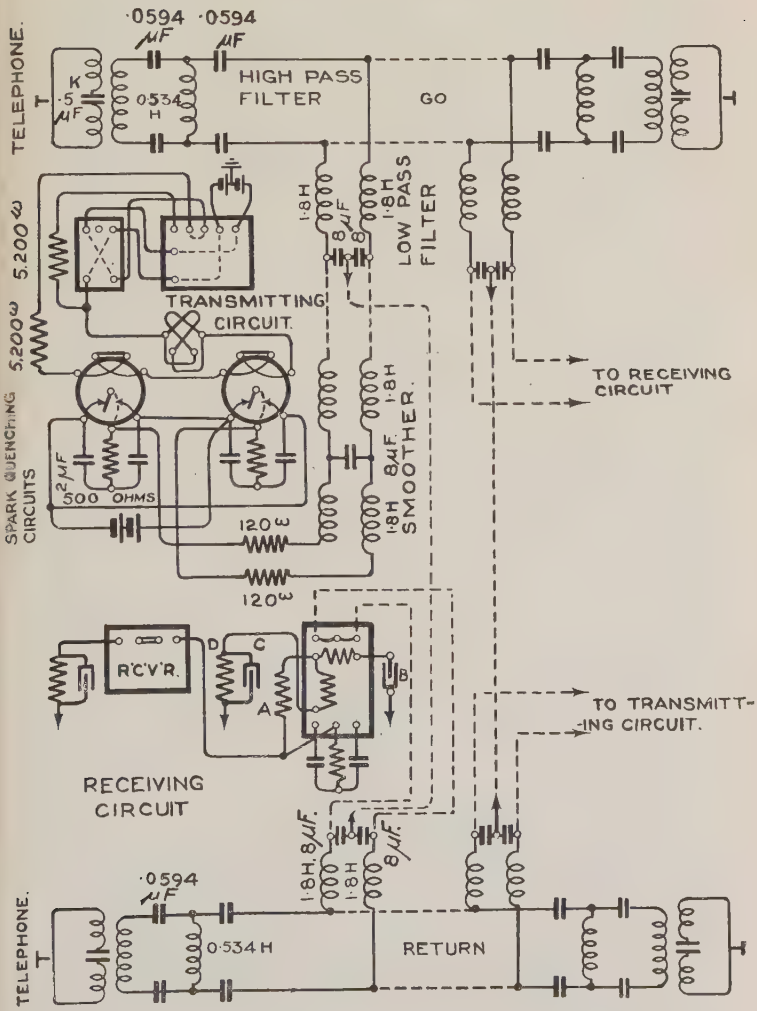

FIG. 563. CONNECTIONS OF SUB-AUDIO CIRCUIT

There is a smoothing circuit at the transmitting end. This is nothing more or less than a filter. It assists the filter in the line unit, inasmuch as it is arranged to have a cut-off of 40 cycles and, further, it rounds down the shape of the sent signal.

The values of the filters are shown in the diagram. All high-pass filters are the same, and all low-pass filters have the same values as shown in the one marked on the diagram.

In the case of the low-pass filters, it is necessary that the inductances should be carefully balanced in order to keep down the " within core " cross-talk. For a similar reason, the condensers in the high-pass filter should be carefully balanced.

It will be seen, therefore, that whilst it is necessary that the values of the respective filter components should compare favourably with the calculated values, it is also very important that the difference in value of (*a*) the condensers in the high-pass filter and (*b*) the inductances in the low-pass filter should be as small as possible. Condenser K (·5 m.f.) is introduced in the line transformer still further to ensure that telegraph currents do not interfere with the telephone circuit. It does introduce a slight loss in the circuit, but this disadvantage is outweighed by the benefit derived.

As this is essentially a weak current telegraph system and, further, as it is worked on loaded conductors, it is obvious that the line current from the telegraph set should be kept as low as possible.

In recent experiments this value has been about 4 mA, with a maximum of 5 mA. Any increase on this produces further increase in the noise in the telephone circuit. The Wheatstone speed obtained is about 50 words per minute. By fixing a " G " circuit arrangement at the receiving end, this was increased to about 80 words per minute (i.e. this would take a start-stop system easily).

There is one disadvantage of this composited system

in that ordinary ringing methods cannot be adopted on the telephone circuit, so that in all cases 500-cycle ringing is used.

At telephone repeater stations, arrangements are made to by-pass the direct current telegraph signals. This is done by inserting high and low-pass filters. In long lines a simple telegraph repeater would be fitted at the telephone repeater station about the middle of the line.

On the two loops of a quadruple wire telephone cable, two physical and one superposed or phantom telephone speech channels are obtainable, as well as the " go " and " return " of a telegraph circuit.

The system is in every day use in Germany, with repeaters spaced at 93 and 186 mile distances, according to the gauge of the conductor (20 lb. or 50 lb. per mile) in the telephone cable.

Transformers are inserted in the lines when trunk lines are subject to high voltage disturbance, and in this case the relays are set neutral and the telegraph signals are made by impulses precisely as in the case of circuits where a condenser is employed to cut out earth currents.

Another interesting development is being tried by the British Post Office on loaded underground circuits equipped with telephone repeaters. In the scheme just detailed, low pass filters are required at the telephone repeater stations to by-pass the low frequency telegraph currents. Many of the telephone pairs carry also a superposed telephone circuit, the two wires of each pair of a quad forming the conductors of the superposed circuit on the quad. A telegraph circuit can be superposed on the " phantom " telephone circuits which are already superposed on the side circuits of the quads. At the telephone repeater stations the only connection required is a wire joining the centres of the " phantom " circuit transformers. The four wires of a quad thus form the " go " path of the telegraph currents, and the four wires of the second quad act as the " return " path. Trials have shown that teleprinter working can be successfully carried out on this " superphantom " over distances up to 250 miles at present, the distance being limited by the high capacity of the quads. The experiments are being continued.

CHAPTER XXI

THE TEST BOARD AND PROTECTIVE DEVICES

A DEFINITE orderly and flexible system of cabling is essential in any large telegraph office : (i) to enable faults to be located and removed without delay ; and (ii) to provide for plant and circuit changes rendered necessary by variations in traffic conditions, improvements in apparatus, or new systems. The essential idea is to secure that alterations can be made without interfering with the permanent cabling which is in general laced up and connected to tags. Flexibility is secured by the interposition of the main distributing frame between the street cables and the test board and by the cross-connection field provided on the latter.

The function of the test box is to provide facilities for testing operations, and for circuit and apparatus changes. At very small offices having but two or three sets of apparatus, the lines and battery leads are taken direct to the instruments. On the other hand, in the Central Telegraph Office, it has been found to be necessary to provide an additional or sub-test board in each division so that circuit changes may be made within the division in accordance with traffic requirements ; in addition, special testing facilities are provided in the basement of the C.T.O. for all circuits carried in underground cables.

There are two main sources of danger to telegraph apparatus, the one by lightning discharges and the other by contact with electric light and power circuits. In the absence of protective devices there would be serious fire risks with danger to life, buildings, and plant generally. The danger from lightning is eliminated by fitting lightning protectors on every overhead circuit at the point of entrance to the building.

The protection of the plant from the results of contact with power circuits is provided by fuses and heat coils, but the risk is minimized by fixing earthed guard wires over tramway trolley circuits or by crossing such circuits with specially insulated wire, known as P.B.J. The insulation consists of a layer of impregnated paper; this is covered with a spiral layer of cotton and finally served with braided cotton impregnated with a weather-proof composition made up of red lead, linseed oil, and paraffin wax (vide page 291).

Where other power circuits are crossed by open telephone wires special guarding is provided. There is also the possibility of power contacts due to street operations, but this is comparatively small and is largely met by the existing devices.

PART I—THE TEST BOARD

In addition to the effects of physical contact with power circuits, there are cases where the telegraphs are affected by currents induced in them by adjacent power circuits. These effects may be minimized by the use of resonant shunts in the manner discussed later. The voltages induced on telegraph circuits running parallel with open wire extra high tension circuits when a fault occurs on the latter may attain very high values, and this problem will become increasingly important as the grid electrification scheme comes into being.

The most difficult problem at the moment is that created by leakage currents from electric tramways and railways. These currents gradually destroy the lead covering of paper insulated cables and thus permit the entrance of water. This matter is discussed in detail in Chapter XXIII.

The old form of test box consists of a number of terminal screws, mounted upon a vertical wooden baseboard, connected together by brass links.

The line portion of the terminal pattern test box

consists of a series of vertical rows, each consisting of seven terminal screws mounted upon a vertical board. The central row of terminals, which are of blackened brass, serve as the common earth connection for two sets of apparatus (*vide* Figs. 564 and 565). Usually, "up" lines are placed at the top and "down" lines

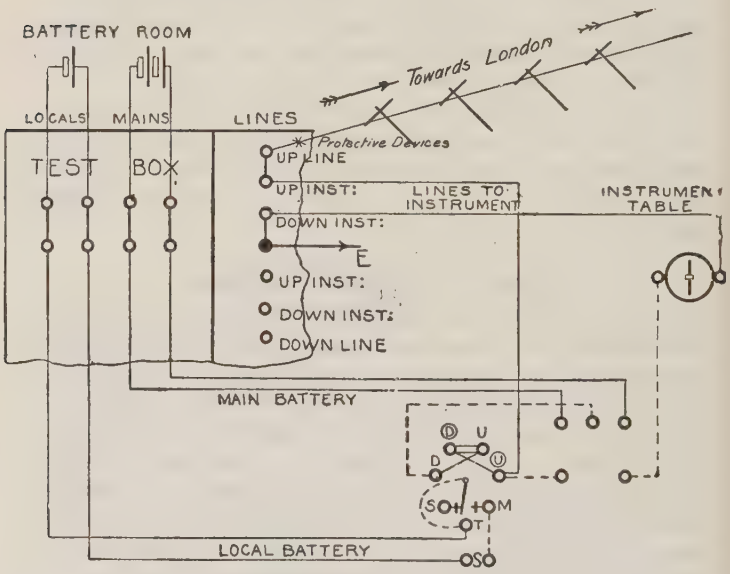

Fig. 564. Test Box Connections of a Double Current Sounder Circuit

at the bottom, but this arrangement is sometimes departed from to economize space.

The connections of one end of a down station double current sounder are shown in detail in Fig. 564. The up and down instrument terminals are respectively connected to *U*-circle of the relay and to the galvanometer by two leads from the test box to the instrument table. Two brass links at the test box connect the set to line and earth, whilst the batteries are linked

up on the battery panel. Each battery occupies four terminals, *Z* being on the left of each pair.

At small offices, separate panels are provided for terminal circuits, through circuits, and batteries. The teak panels are hinged on the left to afford access to the connections at the back and the box is fitted on the

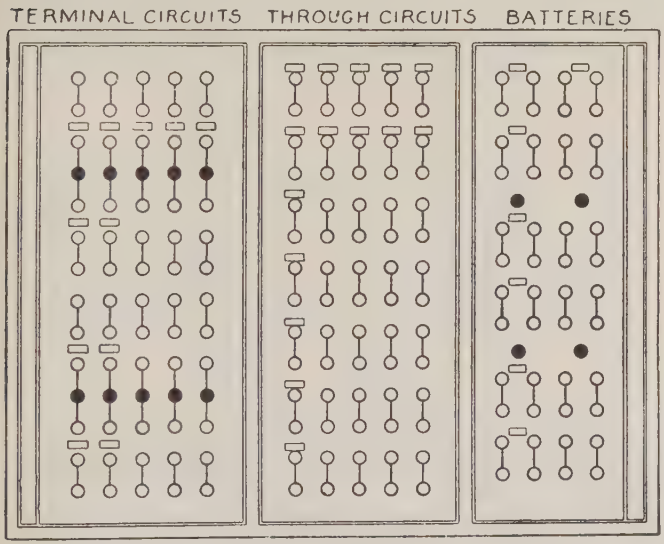

FIG. 565. ARRANGEMENT OF TEST BOX FOR A SMALL OFFICE

wall at a convenient height. The dimensions of the box shown in Fig. 565 are 2 ft. 8 in. high by 3 ft. 4 in. wide. Its terminals are made with a stout pin which projects behind the panel and the wires are wrapped around and soldered to the pin.

Route Order. At larger offices having many circuits, it is necessary to arrange the wires in route order to facilitate the tracing of contact faults and also to preserve orderliness in wiring. In such cases, through circuits and intermediate circuits are placed with the

terminated circuits following the same route, and above each group a label is fixed showing the name of the route. For instance, a route of twelve wires going to " B " via the " Y " canal would be labelled " B via Y canal " to distinguish them from a route on the road labelled " B road." It will therefore be recognized that each through or intermediate circuit occupies two sets of terminals, since the up and down sides are placed with the wires following the same routes. The connections

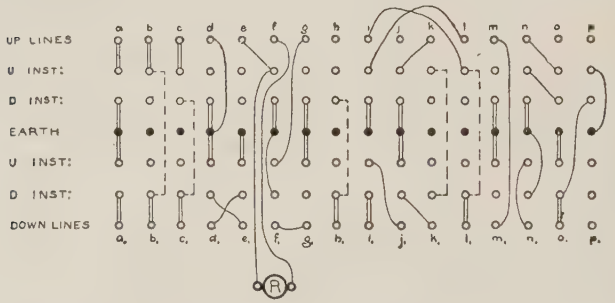

FIG. 566. ILLUSTRATING VARIOUS TEST BOX CHANGES

Terminal circuits.—a down station set, a_1 up station set.
Intermediate circuit.—c c_1 down set on c line ; down instrument terminal connected to c_1 line by connection made behind the box (dotted line).
Through circuit.—b and b_1.
To earth a line.—d is earthed ; the line link is removed.
To disconnect a line.—h ; the line link is removed.
To loop lines.—f_1 and g_1 lines are looped ; line links are removed.
To reverse.—n_1 set is reversed, i.e. made down station.
To join through.—m and m_1 lines are joined through ; m and m_1 sets are spare.
To divide a through wire.—k line is on j set and k_1 line on j_1 apparatus.
To fork lines.—e and f lines are forked on to f set and resistance inserted in line f.
To form a metallic circuit.—i_1 and j_1 lines are used by the i_1 apparatus.
To tap a circuit.—o set is placed in series with the n line and n apparatus.
To come in on a circuit.—Remove one line link and join in the apparatus to be used.
To cross sets.—d_1 and e_1 sets are changed over.
To cross lines.—i and the up side of l lines are changed over.
To terminate k k_1.—Both up and down sides are terminated on j and j_1 sets.
The connections are made with short lengths of insulated wire.

required between the two sets of terminals indicated by dotted lines (Fig. 566) are made behind the box.

Test Box Manipulation. Fig. 566, with the table beneath it illustrate the various changes ordinarily required to be made. The precise object of the various

operations is dealt with under testing in Part III of Chapter XXII, but it may be well here to emphasize the necessity to join up the apparatus correctly as regards up and down stations.

Battery Test Box. The battery test box or panel should need little comment; in fact, a comparison of Figs. 564 and 565 should make the arrangement sufficiently obvious.

To increase the power. Remove the link connecting

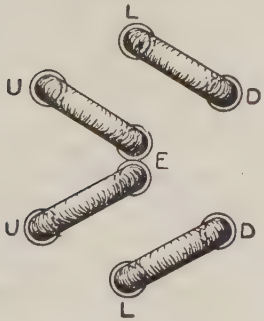

FIG. 567. **U**-LINK TEST BOX, LINE AND INSTRUMENT CONNECTIONS

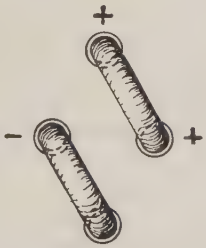

FIG. 568. **U**-LINK TEST BOX, BATTERY CONNECTIONS

C of the battery to the instrument and join the former to the *Z* of the battery to be added. The *C* terminal of this battery is then connected to the *C* instrument terminal.

To cross two batteries. All four links are removed and then *Z* and *C* of the first battery are respectively connected to the *Z* and *C* instrument terminals of the second set of apparatus. Similarly *Z* and *C* of the second battery are respectively joined to *Z* and *C* of the first instrument.

U-link Test Board. The 96-line test board consists of four ebonite tablets mounted in a cabinet of similar general design to that shown in Fig. 569. The two line tablets, each of which consists of 48 sets of four test

holes, are placed side by side, and beneath them are placed two 40 circuit battery tablets. Each line circuit occupies four test holes arranged as shown in Fig. 567, and connected together by U-links. The two sets with the links in the position shown are joined up as up stations. By linking the line with *U* and earth with *D* instrument the set may be reversed, whilst a link vertically placed between *L* and *E* earths the line. The distances *EU*, *EL*, and *ED* are made equal.

In the case of the battery test holes (Fig. 568) the spacing is such that the battery cannot be short-circuited by a wrongly placed U-link. The upper and lower holes are connected to the battery and the central holes to the instrument leads.

The line and battery test holes are connected to cross-connection strips in the base of the test board, and, in the case of the line tablets, cross-connecting facilities are provided by duplicating cross-connection strips of the line test holes. The object gained is explained in detail in the case of switch spring test boards (page 907).

A larger U-link test board accommodates 240 lines, but in this case the terminal circuits are earthed at the instrument table, and two test holes only are provided for each line. Reversing switches are added to a number of circuits which are used for special arrangements. Each of the four tablets contains ten vertical rows of nine test holes. The first six horizontal rows of test holes accommodate 30 lines and instruments, and the three remaining rows are left for intermediate returns, etc. (see page 909). At an office requiring a test board of this size, secondary cell working would be in use, and therefore battery panels are not provided.

These U-link test boards are far more compact than the terminal type.

Switch Spring Test Board. This type saves a large amount of space as compared with a large terminal or U-link pattern board. There are connections on the

face of the board only when it is necessary to make circuit changes or during testing operations.

As in the 240 line U-link board the earth connection

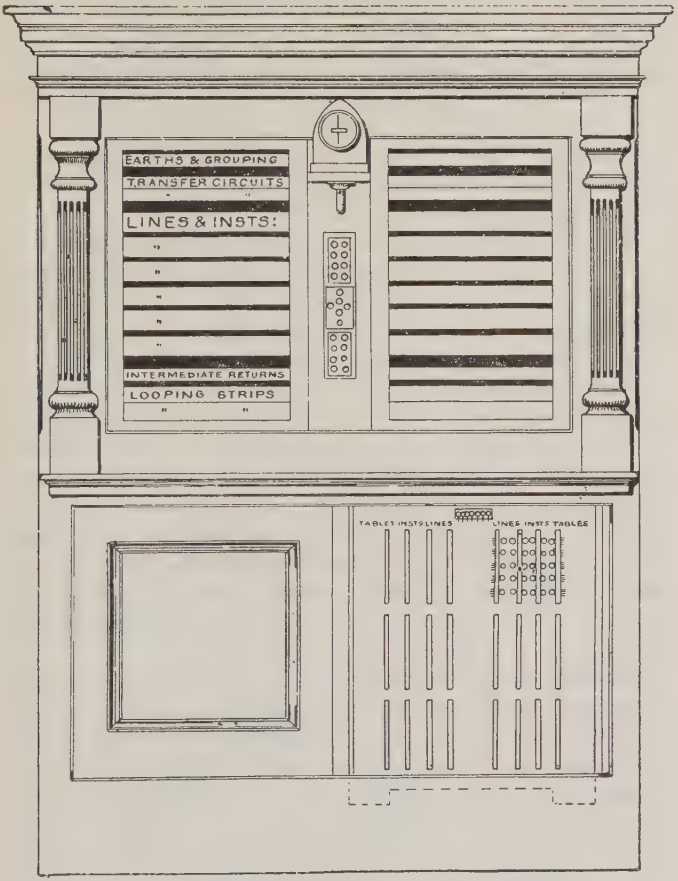

FIG. 569. TWO PANEL SWITCH SPRING TEST BOARD

of each instrument is made at the instrument table, thus saving wiring and test board space. Reversing switches are provided on a number of selected instruments, and

special sets for intermediate working are also provided. In case of urgent need the relay connections could be reversed at the table, and the battery connections made with pegs and cords at the distribution and fuse case.

Each panel of the test board accommodates 120 circuits and also provides for the requisite number of transfer circuits, earthing, grouping, morning test looping, and intermediate return switch springs.

A sketch of the general arrangement of a two-panel test board is given in Fig. 569. It accommodates 240 circuits, and has a total width of but 4 ft. 9 in.

The 120 lines are brought to each panel of the test board in a 127-wire lead-covered cable, the odd seven wires being provided as spares. The conductors are 20 lb. copper wires insulated with silk and cotton, the whole being covered with a seamless sheathing of lead.

Upon the vertical board behind the front apron are placed twenty-four 20-tag cross-connection strips. Each strip consists of a square rod of ebonite with twenty tinned brass stampings placed within the slots prepared for their reception and held in place by thin strips of ebonite screwed down upon them. The brass stampings project upon either side of the ebonite and have a small hole at each end through which the two wires to be connected are passed and soldered upon the top.

Principle. The principle and connections of the apparatus and lines to the switch springs will be apparent from a consideration of Fig. 570. No. 1 line is joined to the right-hand side of the line tag, which is connected through to the opposite tag by means of a bare piece of tinned copper wire soldered between them. The line then passes on to the upper or line switch spring, where it is connected to both long and short springs. The inner springs of the line switch spring are joined to the inner springs of the instrument switch spring, and the latter's outer springs are joined to the right side of the instrument tag. It is there connected

to the left of the tag by a bare wire, and the left end of this tag is joined to the lead to the instrument table. By placing the springs in parallel in the

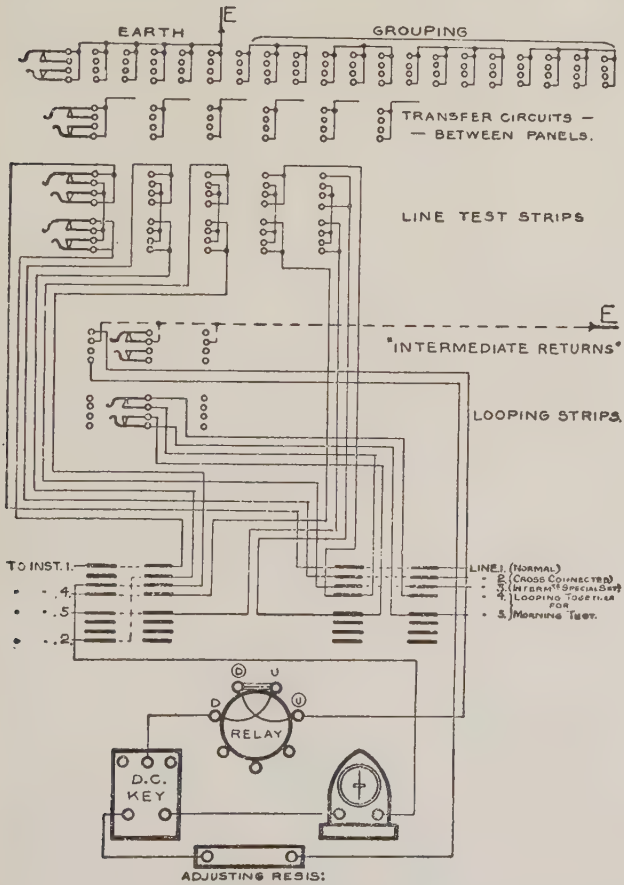

FIG. 570. PRINCIPLE OF SWITCH SPRING TEST BOARD

manner indicated, the risk of a disconnection is greatly minimized.

Cross-connecting Facilities. In each circuit there are

two points bridged by short lengths of bare wire, and by removing them, crosses and changes may be made without disturbing the line cable, cables to the instrument tables, or the connections between the switch springs and the tags. To change the permanent positions of two instruments of similar type, it is only necessary to remove the bare wire connections between the instrument and table cross-connections, and to make the cross with single flame-proof 12½ lb. enamelled conductor. The wires used to form these cross-connections are taken behind the board, where suitable supports are provided for their reception. When it is required to cross two lines the changes are made at the main distribution frame. It will therefore be realized that crosses and changes of every description may be made without interfering with any connections other than those between the two pairs of cross-connection strips. The value of this provision in a large office can scarcely be over-estimated.

Line No. 2, which was originally joined to the apparatus connected to the second instrument tag, is shown cross-connected on to the apparatus in connection with the eighth tag. Without these facilities the lead from the table would have had to be manipulated and probably lengthened, and in the course of quite a short time the cables to the instrument tables would be jointed and would be scattered over the board in chaotic disorder.

Test Board Changes and Transfer Circuits. A number of circular brass pegs with fibre covers, connected together in pairs by flexible cord, are provided for making circuit changes and for connections required for tests. Two switch springs are provided for each terminal circuit, and the insertion of a peg in a line switch spring picks up the line on the outer springs and breaks contact with the inner springs. The other peg may be placed in another instrument switch spring, thereby joining the first line to this apparatus.

The top strip of twenty switch springs is used for earthing and grouping lines or instruments. The first six switch springs are earthed, and thus any line may be earthed by pegging it to one of these switch springs. Two sets of respectively three and four switch springs are connected as indicated for grouping wires together. For example, if it was required to fork No. 1 instrument to lines 2, 3, and 4, it would be necessary to plug No. 1 instrument, No. 2 line, No. 3 line, and No. 4 line on to the first, second, third, and fourth switch springs of one of the groups.

In order to avoid the use of exceptionally long cords to reach from one end to the other of a large test box, a certain number of transfer circuits is provided. Each panel has twenty switch springs for this purpose, and these are connected in such a way as to provide a sufficient number of circuits to each panel of the board. A connection between two switch springs at opposite ends of the board is effected by means of two pairs of ordinary cords, one end of each pair being placed in the switch spring at either end connected to the transfer circuit used.

Special Intermediate Sets. Line No. 3 is shown connected to an instrument fitted for intermediate working. In order to confine the attention to the principles involved, the detailed apparatus connections have not been sketched. The line normally connected to the set passes through the line and instrument switch springs to the galvanometer in the ordinary way, but *U*-circle of the relay and the end of the adjusting resistance are taken to a special switch spring upon the " intermediate returns " strip. Under normal conditions *U*-circle of the relay is earthed through the inner spring whilst the adjusting resistance lead is disconnected. It will therefore be seen that No. 3 instrument normally works as a terminal station. When it is required for special work as an intermediate set, the longer line is connected to the instrument and the shorter one to the

intermediate return switch spring, the changes being made by two pairs of pegs and cords. By inserting one peg in the long line to be used and the other in the instrument switch spring, the long line's instrument is disconnected from the long line, the line normally connected to the intermediate apparatus is disconnected, and the long line joined to the galvanometer of the intermediate set. The short line is plugged through to the intermediate return switch spring which disconnects earth from *U*-circle and, since the plug is solid, connects *U*-circle and the adjusting resistance to the short line. The full connections of the apparatus are given in Fig. 497, which may now profitably be considered in relation to the foregoing paragraph.

Looping Strip. Lines No. 4 and 5 are also shown passing through a switch spring upon the looping strip. No. 4 line passes through the long spring and its inner spring back to the left-hand line tag, and so on to its line and instrument switch springs. No. 5 line similarly passes through the short spring and its inner spring. When an unconnected peg is inserted in the looping switch spring, lines 4 and 5 are looped through the peg. This provides a simple means of looping all those circuits which have to be looped each morning for testing purposes. In some cases the number is very considerable, and the tangle of cords upon the front of the box which would otherwise result is entirely avoided. Moreover, the circuits are arranged upon the looping strip in the order of the times at which they are to be looped.

A test-hole tablet and a differential galvanometer, fixed upon a turntable, are mounted upon the vertical rail between the two panels. These testing arrangements will, however, receive further consideration in Chapter XXII.

PART II—LIGHTNING PROTECTORS

Each set of apparatus is equipped with a lightning protector, the function of which is to prevent the

passage of the discharge through the apparatus when the line wire is struck by lightning. Most forms of protector consist essentially of a small spark-gap placed between the line wire and earth.

A lightning discharge differs from an ordinary telegraphic current in two particulars, viz. its high potential and the suddenness with which it occurs. A spark is produced when the electric strain upon the dielectric (air) reaches such a value that the air breaks down. The potential of a telegraphic current is very seldom more than about 200 volts, and this is insufficient to cause a spark of even the most minute dimensions. The currents are also comparatively slow in their occurrence, i.e. slow in comparison with lightning. Protection which would amply suffice for slow, heavy currents would be quite useless in the case of lightning. In order to make the distinction clear, the following analogies relating to mechanical inertia may prove of value. Let a quantity of gun-cotton be placed upon a slab of stone in the open air. Ignited with a match, nothing beyond a " fizz " will take place, but if fired with enormous rapidity by means of a detonator, the stone will be blown to fragments. The explanation is that, in the second case, the air above the gun-cotton, possessing inertia, will not move instantaneously with sufficient rapidity. The inertia resistance of the air is in this case clearly enormous, and it finds a parallel in the inertia resistance of the electro-magnet to a lightning discharge. Yet another example of a similar phenomenon is the fact that a loose plug of snow in the end of a rifle is sufficient to cause the barrel to burst when the cartridge is fired.

An electro-magnet possesses considerable inductance, the effect of which is to delay the rise of the current through it. The magnetic field, which is produced by a current, in springing into existence, cuts through the windings, and therefore generates an opposing E.M.F. termed the back E.M.F. of self-induction. This effect

may correctly be regarded as electro-magnetic "inertia resistance." The resistance which would pass an equivalent current when the E.M.F. in question was steadily applied to it is termed the "impedance." This quantity depends upon the rate at which the current rises, and means an equivalent resistance to that which would pass the value of current given by Ohm's Law.

The equivalent resistance or impedance offered by the apparatus to a lightning discharge is enormous

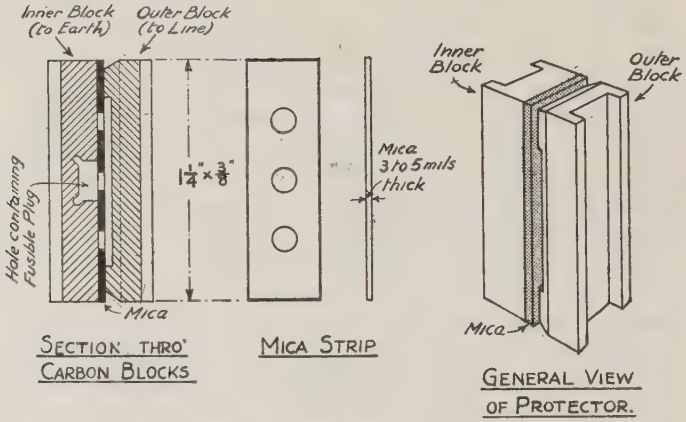

FIG. 571. PROTECTOR "D"

and as the discharge is of sufficiently high potential, it breaks down the insulation of the air, and escapes to earth by the path of less resistance.

"D" Protector. The "D" protector (Fig. 571) consists of two blocks of moulded carbon, $1\frac{1}{4}$ in. long by $\frac{3}{8}$ in. wide, separated by a mica strip 3 to 5 mils thick, with three $\frac{1}{8}$ in. circular holes to form the air-gaps. The back or earth block carries a circular plug of metal, consisting of 8 parts of bismuth, 5 of tin, and 3 of lead, having a melting or fusing point of 200° F. to 210° F. The front or line block is chamfered

to minimize leakage due to dust bridging the gaps. Both blocks are slotted to receive the connecting spring or guide, which serves to make connection with the protector and to maintain its position. Any E.M.F. of 350 volts or more produces a spark across the air-gap and if maintained, the fusible metal melts and bridges the air-gap, thereby earthing the line and blowing the fuse.

"D" Protector, New Type. The "D" protector described above has proved, in service, a very efficient

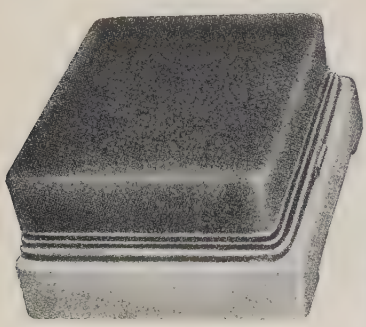

FIG. 572. "C" PROTECTOR

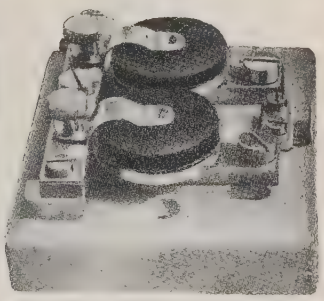

FIG. 573. "C" PROTECTOR WITH COVER REMOVED

unit in protecting the apparatus from damage, but it has several troublesome defects. Unless the spring clips grip the protector the mica has a tendency to slip, resulting in a contact between the line and earth carbons. The line carbon has a recess 3 to 5 mils deep ground out of the carbon block, which has the effect of removing the hard skin, leaving a more or less loose surface which is readily disintegrated by line discharges during thundery weather and results in intermittent earths.

The faults resulting from these defects are easily remedied at the exchange end, but in the case of out stations considerable travelling time is incurred.

The grinding of so small an amount as 3 to 5 mils in the line carbon is a difficult operation, and in consequence, the manufacturing tolerances have had to be increased, reducing the efficiency of the protector.

The necessity for removing the defects mentioned above has received attention for some time, but as the number of protectors of this type runs into millions, it is essential that any new type should be subjected

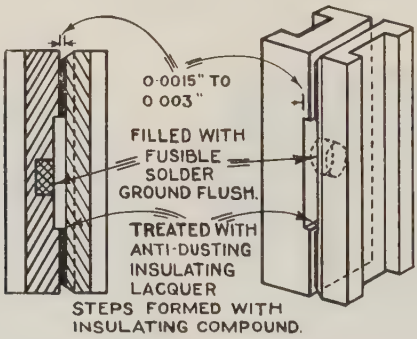

Fig. 574. New Type of "D" Protector

to exhaustive test and prolonged trial in service before adoption.

A new two unit protector, interchangeable with the three unit protector, has been devised which overcomes the objections detailed, and has been standardized by the Post Office.

In the new protector the active surfaces of both carbons are flat and are first sprayed with a varnish of collodion base containing sufficient fusible gum to cause fusion on sparking, but the amount is not sufficient to affect the puncturing voltage. The effect of this coating is to make the active surface self-sealing, preventing, or at any rate sealing, any disintegrated carbon dust.

Instead of a mica separator, the carbon blocks are coated at each end with a thin layer of varnish of a

cellulose acetate basis possessing a high electrical insulation when dry. The varnish dries nail hard and is non-hygroscopic. The two blocks are tested to discharge at 500 to 750 volts D.C. and must test " infinity " with a 250 volt D.C. megger. It will be seen that the number of units has been reduced from three to two, and the efficiency of the protector increased.

The protector has received a thorough trial in the British Isles, and favourable reports have been received from the telephone authorities of a number of tropical countries particularly where severe thunderstorms are experienced in combination with very humid atmospheric conditions.

The protector was devised by F. McClarence, of the Post Office Engineering Department, and has been developed on a manufacturing basis by Messrs. Ericsson Telephones, Ltd.

" C " Protector. The obsolescent " C " protector for two lines (Figs. 572 and 573) consists of two protectors mounted on a porcelain stabilit base, with an enamelled iron cover secured in position by a spring clip. Each protector consists of two circular carbon plates, between which three air-gaps are formed by the interposition of a perforated mica disc. The lower carbon plate is mounted on a tinned brass holder, which is fitted with a screw for attaching it to the terminal block. The upper plate is held in position by a clamping spring screwed to the earth-connected bar. The three radial holes in the mica disc are recessed from the solid mica in order to increase the length of the surface over which a leakage current has to travel from plate to plate. With a plain hole the length of surface is equal to the thickness of the mica disc, but with a recessed disc the current travels down the wall of the recess, along and over the centrally projecting web along the recess, and down the wall of the recess to the other plate. In this way the insulation of the protector is greatly increased, and the possibility of carbon dust abraded from the plates causing a connection is minimized.

" G " and " H " Protectors. The " G " protector (Fig. 575), which is more efficient than the " C " or " D " forms, consists of a spark-gap between two carbon electrodes, with serrated edges, contained in a hermetically sealed glass tube, from which most of the air has been removed, thus creating a low

vacuum. It is used in damp situations where the insulation of " C " protectors cannot be maintained, as, for example, in some pole test boxes.*

The " H " type is similar, but is fitted with lugs, by which it may be connected on ordinary instrument terminals. It is employed to protect the transformers used on telegraph superposed circuits, and a protector is placed across each winding, so that lightning discharges may be diverted from the coils.

These protectors, whilst having high insulation, are sufficiently sensitive to provide a path for currents, due to contact with tramway trolley wires, with a voltage of 500. The use of a low vacuum instead of air renders the difference of potential necessary to produce a spark far less than is necessary in air.

FIG. 575. PROTECTOR " G "

Tablet Protector. The tablet protector is used on all Post Office submarine cable circuits at the junction of the cables and land lines. It comprises a plate protector, a 3-ampere glass tube fuse, and a combined inductance coil and reel protector. The latter consists of a coil of fine silk-covered platinum silver wire wound on a metallic earth-connected bobbin. The insulation of the wire forms the spark-gap between line and earth, but the more important function is to provide an inductive resistance immediately before the cable.

The plate protector itself consists of two large oblong brass plates separated by a large mica disc with suitable holes to provide air-gaps.

The land line is connected to the pillar terminal, thence to the plate protector by means of a short length of wire with about six $\frac{1}{2}$ in. turns, from thence to the bobbin protector by another piece of wire having about six $\frac{1}{2}$ in. turns. The terminal of the bobbin protector is pointed and is connected to the lower end of the coil.

* " Protection of Transformers in Pole Test Boxes," *P O. Electrical Engineer's Journal*, Vol. IV, p. 341.

The other terminal is connected to the fuse and thence to the cable. There are thus three points where the lightning has an opportunity to pass, viz., the plate, the point, and the bobbin, while the fuse is a protection against heavy current either from lightning or from power circuits. The weakness of the tablet protector is that lightning generally earths the coil and thus interrupts the circuit for a more or less prolonged period. The best protector is one which does not interrupt the circuit, and a new design known as protector K, having plate, point, and vacuum tube protectors is under trial for this purpose.

Tablet protectors are most efficient, but are, of course, more costly than any other types described.

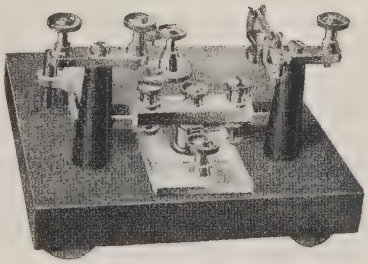

FIG. 576. TABLET PROTECTOR

"F" Protector. This type of protector is but little used. Its function is, however, to provide protection to a cable at the point where it joins an open line and it is fixed in the open air on the terminal pole. It consists of two concentric copper cylinders separated by a mica disc having fifteen circular holes. The top of the under cylinder is closed by an ebonite disc, and the outer cylinder, the top end of which is copper, serves also as cover. The arrangement is mounted on a G.I. bolt, which makes contact with the inner cylinder and is earth connected, the cable being joined to the outer cylinder.

Position of Protector and Inductance Spiral. Protectors are fixed as near as possible to the point at which the wires enter the building. The earth connection from the protectors when there are more than six is made with 7/18, and when there are six or less

with 3/20, bare stranded soft copper conductor, and the route followed by it on its way to earth is made as short and straight as possible, all sharp turns and bends being avoided to the uttermost extent. The wire should also be kept away from gas-pipes, and more especially when they are of lead, in order that the risk of "side-flashing" may be minimized; a lightning discharge jumping from the earth wire to a leaden gas-pipe might readily produce a serious conflagration. In no circumstances should the earth wire be connected to internal gas-pipes or even taken near to them (see page 213).

The lead from outside is first taken straight to the protector and a spiral of about ten turns of wire with a diameter of about $\frac{1}{4}$ to $\frac{3}{8}$ of an inch is formed in the lead to the instrument at the point at which it leaves the protector. This small inductive spiral offers a very high resistance to an impulsive discharge, and thereby increases the efficiency of the protection afforded. In no circumstances should the line wire be taken first to the instrument and then onwards to the protector.

The iron cases of the protectors should be earth-connected, so that lightning discharges side-flashing to them may be safely carried away. Similar remarks apply to the ironwork of test and cross-connection frames, also to the cable connection boxes, and, indeed, to iron troughings and the sheaths of lead cables.

PART III—PROTECTION FROM POWER CIRCUITS*

It is obviously essential firstly to reduce the possibility of contacts between telegraph and telephone and power wires to a minimum; and secondly, to guard against damage to the apparatus and to avoid the risk of fire should such a contact occur. The first

* *Vide Protection from Power Circuits*, by S. C. Bartholomew. A paper read before the Institution of P.O. Electrical Engineers, 14th December, 1908.

condition has been met by various methods of "guarding," and the second by the use of fuses and "heat coils" in the telegraph circuits within the area in which the power circuits are in use. It should be borne in mind that where electric tramways are concerned, the telegraph wires will always be *above* the trolley wires, whilst where electric light and power systems are involved, the telegraph wires may cross either above or below the power circuits. All such crossings are, however, avoided whenever possible.

Guard Wires for Tramways. Where there is a single trolley wire, above which a route of telegraph wires crosses, two wires, of No. 8 galvanized steel, or of seven strands of No. 16 wire, or of bronze or hard-drawn copper wire of equivalent strength, are erected at least 24 in. above the trolley wire. The two guard wires overlap the centre of the trolley wire by 8 in. upon either side, and both are efficiently earthed by connecting them to the tram rails with insulated cable taken down the inside of the pole.

Where the guard wires exceed 200 yd. in length, at least one earth connection per 200 yd. should be made to the wires. The supports for the guard wires should be rigid, and at every support each guard wire should be securely bound in, or terminated.

In order to avoid electrolytic damage (*q.v.*) by leakage currents, it is essential that the maximum separating distance should be maintained between the rails and any lead-covered cables following the tramway route. Hence, it is most undesirable that any tramway pole should be bonded to the rails, and it is for this reason that it is specified that guard wires should be connected to the rails by insulated cable, i.e. the guard wires should not be bonded to the pole and the latter bonded to the rails (see page 1029).

The number of guard wires erected is in accordance with the gauge of the wires crossing, and the number of, and distances between, the parallel trolley wires. For instance, each trolley wire requires two guard

wires when the distance between them is over 4 ft., whilst for a distance of from 16 to 48 in. three guard wires are used for the two trolley wires.*

The guard wires serve to prevent a broken telegraph line from falling directly on to the trolley wire. Where the wire happens to curl over and so to make contact with the trolley wire, it is also in contact with the earthed guard wire. Usually the current flowing to earth through the wire which forms the contact is sufficient to burn it up, or, with heavy gauge wires, is sufficient to operate the tramway section cut-out. Another serious danger which the guard wires obviate is that a fallen telegraph wire in contact with the trolley wire would, of course, give electric shocks to any one who, without the aid of india-rubber gloves, was unwise enough to touch it. It may be said that efficiently maintained guard wires very greatly reduce the risk due to falling telegraph wires, but it must not be overlooked that the breakage of telegraph wires is a comparatively rare occurrence, especially when the wires are terminated upon either side of the crossing. Guard wires are also provided in every case in which an open route runs parallel with a trolley circuit, if the trolley circuit is within the triangle drawn at 45° with the vertical from the top wire horizontally nearest to the trolley wire.

At tramway crossings covered wires are generally erected so that guard wires may be dispensed with. The covering of this wire is of some interest. It should be explained that it is difficult to obtain a satisfactory insulated wire for use in the open. Rubber covering is best when new, but its life when exposed to the atmosphere is short, and although when first erected the covering may be a perfect safeguard against contact with power wires, in the course of a few years the covering is a snare in that it gives a sense of false

* The precise arrangements are governed by the Electricity Commissioner's "Regulations for Overhead Power Lines."

security. The special wire used at tramway and other power circuit crossings consists of bronze wire, 55 lb. to the mile, insulated first with two lappings of manilla paper treated with linseed oil, over which is a spiral wrapping of cotton, and finally cotton braid, both of which are thoroughly impregnated with a mixture of litharge, linseed oil, and paraffin wax. The completed wire is also drawn through a bath of paraffin wax. The paper is the foundation of the insulation, the impregnated cotton and braid being primarily for the weather-proofing, but they have also good insulating properties.

The insulation of this wire appears to improve with age, due to the oxidation of the mixture closing up the pores of the material. The wire has behaved well in districts where chemical fumes play havoc with ordinary bare and rubber-covered wires.

Guarding Electric Light and Power Circuits. The voltage employed on electric light and power circuits vary within wide limits. The systems are classified according to voltage by the Board of Trade, as follows—

Up to 250 volts . . .	Low pressure
Above 250 volts to 650 volts	Medium pressure
,, 650 ,, 3000 ,.	High pressure
,, 3000 volts . . .	Extra high pressure

Guarding is not required by the Post Office where telegraphs are endangered by power circuits worked at pressures below 120 volts direct current and 60 volts alternating current. Fuses and heat coils are, however, fitted in the telegraph circuits endangered. It should be remarked, in passing, that shock from alternating current is more dangerous than from direct current—investigations have shown that, roughly, the severity of a shock from an alternating current of a certain voltage is the same as that from a direct current system of double the alternating current voltage.

With power systems between 120 volts and the limit of medium pressure (650 volts), the guarding arrangements vary according to whether the telegraphs or power circuits are uppermost, the number and formation of the power wires, and the separating distances between the power wires. The detailed arrangements are too lengthy to give here, and the following general description should suffice.

Where the telegraphs are uppermost, independently earthed guard wires may be erected above the power system, as in the case of tramways. There is a slight difference in that the overlap is governed by the distance between the highest and the lowest power wires, and does not keep the constant 8 in. as with tramway systems. It may vary between 4 in. and 24 in. according to the formation of the power wires.

Where a three-wire power system is concerned, with the neutral conductor earthed at the power station, the neutral conductor may consist of two wires arranged to take the place of guard wires. This method has advantages, in that, if arranged for when the power system is installed, the addition of telegraph crossings subsequently does not involve changes and consequent expense.

Where the power system is uppermost, the usual guarding may be cradling arrangements, which prevent the high potential wires falling on the telegraph wires.

The cradling can be made with independently earthed wires, or by utilizing the earthed neutral conductor, if the system is three-wire. Figs. 577 to 579 indicate the arrangements.

As in the case of tramways, covered conductors for the telegraphs are erected where the routes and circuits are unimportant. Similar wire to that previously described is employed.

If covered conductors, supported by earthed suspending wires, are used on the power system, additional guarding is not required. The earthed suspending wire,

in addition to acting as a safeguard in itself, ensures that the coverings of the power wires will be maintained in good condition by the owner of the power circuit, as, otherwise, current will be lost.

Where power systems are worked at high and extra high pressures, it is now the practice to ensure that

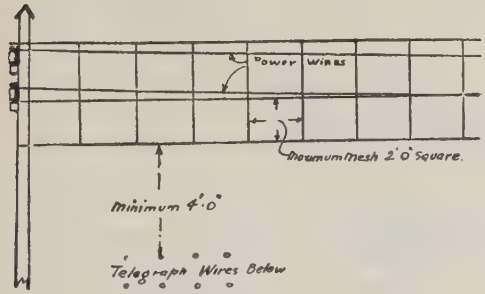

FIG. 577. SIDE VIEW OF CRADLE GUARDING

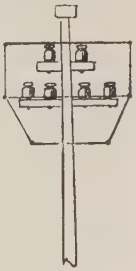

FIG. 578. END-ON VIEW OF CRADLE GUARDING

contact between the telegraphs and such systems is rendered impossible by placing either the telegraph wires or the power wires underground at the danger points. As the grid electrification scheme is to be

FIG. 579. SKETCH OF CRADLING UTILIZING THE NEUTRAL CONDUCTOR

worked at a pressure of 132,000 volts, the need for stringent precautions requires no emphasis.

Use of India-rubber Gloves. Whilst men are working upon wires in the vicinity of a point at which they cross the trolley wires, india-rubber gloves are invariably employed to guard against shocks. There is not only

the danger of the shock itself, which is seldom fatal, but the risk that the man may be startled, and so fall from the pole. This should not, however, occur if the man is wearing a leather " safety belt."

Protection Applied to Circuits. Having described the guard wire arrangements which are applied to the power circuits, it is now necessary to consider the protective devices added to the telegraph and telephone circuits within the affected area. Supposing that a contact between a power circuit and a telegraph wire occurs, the effect of these devices is (1) to protect the apparatus from damage, and (2) to prevent lines passing through the affected area from continued contact with the power wires. The first condition is fulfilled by the provision of a heat coil upon the line side of the apparatus, and the second by the use of fuses.

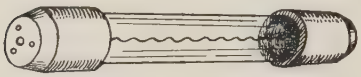

FIG. 580. GLASS-TUBE FUSE

Glass-tube Fuse. The 3-ampere glass-tube fuse (Fig. 580) consists of a fine crimped phosphor-bronze wire, contained within a glass tube 2 in. long, the ends of which are closed by two copper caps cemented with shellac. The fuse wire is passed through two central holes in the caps and soldered. When actuated by a heavy current, volatilized metal is blown through the vent holes, hence the glass tube in the latest type of fuse is replaced by a bare unglazed procelain tube of small bore having ventless caps. The standard fuse mounting is shown in Fig. 598.

The type of fuse (Fig. 581) used on the No. 4028 mounting (Fig. 599) consists of an asbestos tube which contains the fuse wire; this tube is carried by a light bakelite framework, on each end of which a metal cap with knife edges is pressed.

Both types of fuse are specified to operate within 45 seconds of the current reaching 3 amperes after having been increased from zero to 3 amperes during 30 seconds.

Heat Coils. It is impracticable, owing to the exceptionally small gauge of wire needed, to provide a fuse which will be blown by a current much less than 1 ampere. Now, a current of far less than this amount, flowing for a considerable time through a relay or other telegraph instrument, would produce very serious

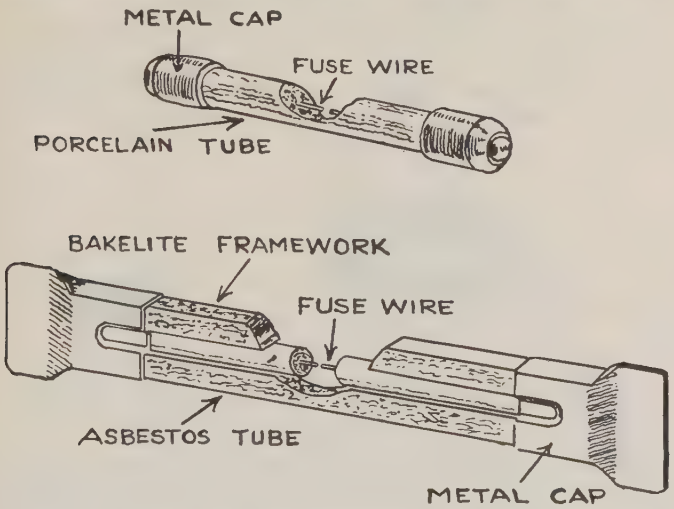

FIG. 581. FUSES FOR FUSE MOUNTINGS NOS. 4001 AND 4028

damage, and it is quite possible that a fire might even be originated in this way. The heat generated by a current in a conductor or system of conductors is proportional to the square of the current, to the resistance of the conductors, and to the time during which the current is flowing. The temperature of the conductors depends upon the difference between the rate at which heat is generated by the current and the rate at which the heat is radiated. When the conductors are in a comparatively confined space, the temperature may rise sufficiently to produce disastrous results.

There are two main types of heat coil, distinguished

as heat coils " A " which break the circuit when operated, and heat coils " B " which earth the circuit when operated.

The " A " type of heat coil (green cover) is specified to carry 300 mA for three hours without operating, but to " strike " when a current of 500 mA flows through it for a period of from 15 to 60 seconds.

A section of a heat coil and a view of its appearance are given in Figs. 582 and 583. The small brass bobbin with fibre cheeks is wound with double-silk covered Nickel silver wire to a resistance of 4·5$^{\omega}$

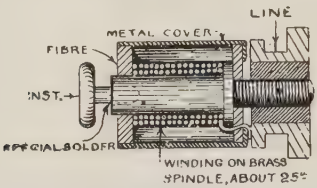

Fig. 582. " A " Form of Heat Coil Drawn to about Twice its Full Size

Fig. 583. Heat Coil (Full Size)

to 5·5$^{\omega}$. One end of the coil is soldered to the bobbin, whilst the other end passes through to the grooved metal washer, which is carried by, but insulated from, the screwed extension of the bobbin. The left end of the bobbin is bored so as to receive the pin, which is secured in its position by a special type of solder having a very low fusing point. When a current of 500 mA passes for at least 60 seconds the heat generated is sufficient to melt the solder, and the pin is then pulled out by the action of a spring and the circuit disconnected.

The collapsible earthing type, known as the heat coil " B " (Fig. 584), is fitted on the M.D.F. in all common battery and automatic telephone exchanges. The coil is fixed to the pin by a special solder having a low melting point. When operated, the coil slides down

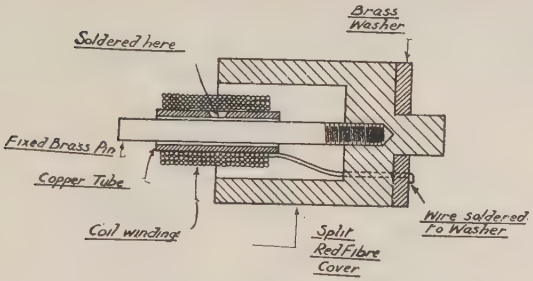

FIG. 584. HEAT COIL "B" (FOUR TIMES FULL SIZE)

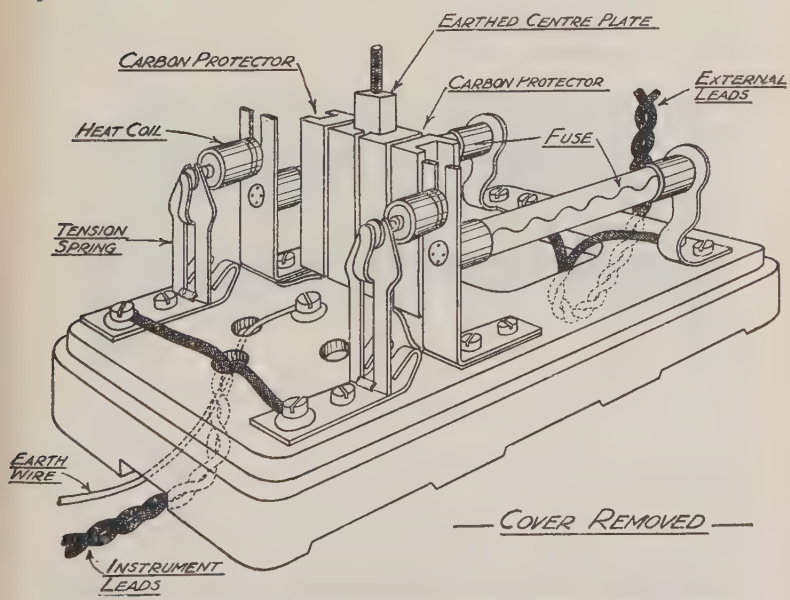

FIG. 585. COMBINED PROTECTOR HEAT COIL, AND FUSE FITTING FOR TWO LINES

the pin under the pressure of the spring upon which it is fitted. The collapse of the coil causes the fixed brass pin to move inwards, which brings the travelling

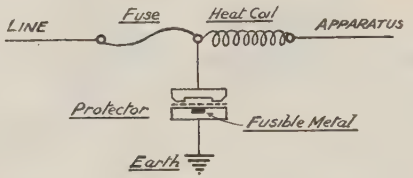

Fig. 586. Sequence of Protector, Heat Coil, and Fuse Fitting

earthing spring into connection with a contact on the earthed central mounting plate of the fitting (Fig. 589).

The coil is wound with double-silk covered Nickel silver wire to a resistance of $3{\cdot}5^{\omega}$ to $4{\cdot}1^{\omega}$ and is specified to carry a current of 350 mA for three hours without

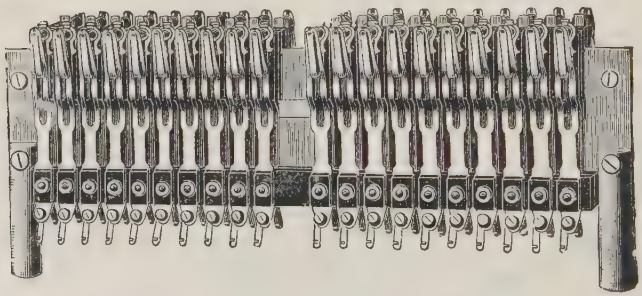

Fig. 587. View of Heat Coil "A" and Protector "D" Strip

operating and to strike with 500 mA within 210 seconds.

The standard fitting using the "A" type of heat coil is shown in Fig. 587.

Combined Protector, Heat Coil "A," and Fuse Fitting. Where the circuit to be protected is located at a sub-office, the heat coil, protector, and fuse are

mounted together upon one base. A fitting, suitable for two lines is termed "Protector, Heat Coil, and Fuse 2/2" (Fig. 585). The base is of porcelain and the cover of iron, lined upon the interior with fireproof material. The protectors are of the "D" type, and fuses of the glass-tube pattern, already described, are employed. The heads of the break heat-coil pins are placed within the slots of the two brass springs, which exert an outward pull upon the pins.

The arrangement of a fuse, protector, and heat coil is indicated in Fig. 586, from which it will be observed that the line wire is connected to the fuse, and that the protector is placed at the junction of the heat coil "A" and the fuse.

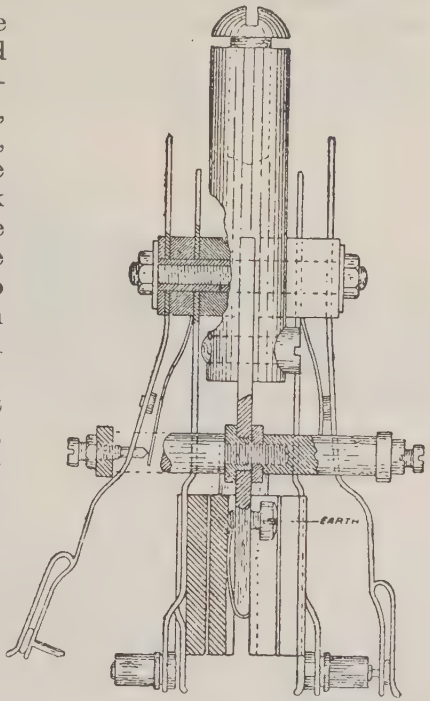

FIG. 588. HEAT COIL "A" AND PROTECTOR "D" STRIP, SHOWING LEFT HEAT COIL OPERATED

It should be added that this sequence is of considerable importance and must never be departed from.

Protector and Heat Coil Fittings. A view of a strip of heat coils "A" and protectors "D," together with a section showing the precise arrangements of the various parts, is shown in Figs. 587 and 588. The

strips are mounted in cast-iron boxes with iron covers, and are made in sizes to take 20, 40, 80, and 160 wires respectively. Fuses are also added.

Protector "D," Heat Coil "B," and Fuse Fittings. The standard unit mounting of forty protectors "D" and heat coils "B" (Fig. 584) is shown in Fig. 589. It is fitted on main distribution frames (*q.v.*)

Testing operations are carried out by removing the heat coils with a special plier-like tool and inserting a

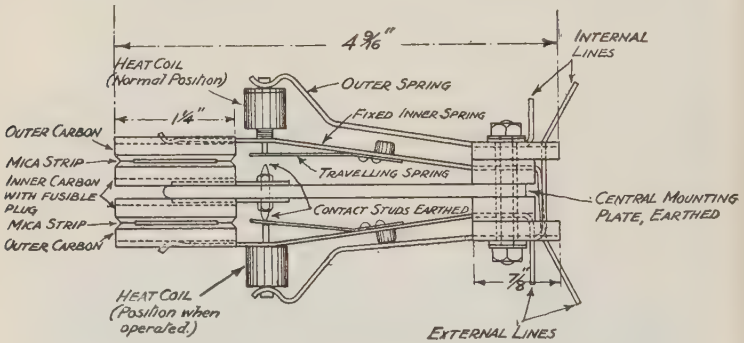

FIG. 589. PROTECTOR "D" AND HEAT COIL "B"

horseshoe plug, which picks up the *A* and *B* lines on the line side and the *A* and *B* lines on the apparatus side. It is, of course, connected to a 4-way flexible cord, the other end of which is joined to four leads to the test desk.

Protectors, Heat Coil, and Test. In order to save the time necessary to remove and refit the heat coils before and after testing, a special fitting has been designed with two additional springs (Fig. 590). A special plug is inserted at this point and picks up the external and internal sides of the two wires. It has the further advantage that the test is made through the heat coils.

Principles Governing the Fitting of Heat Coils and Fuses. Where a route of through wires traverses a

power area, heat coils are provided only at the terminal stations, and fuses are fixed upon specially designed fuse insulators (Fig. 592). The insulator is of the same general pattern as the Post Office terminal type, but the top is shaped to receive a pair of clips mounted on a plate, and a hole is provided for the connecting wire to each groove, the two sides of the line wire being terminated in the upper and lower grooves of the insulator. A black ambroin cap screws on to the top

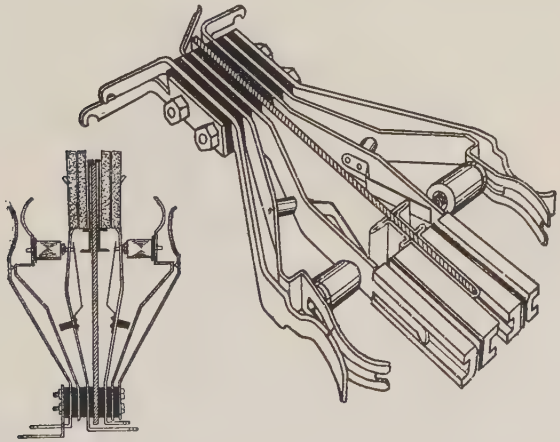

Fig. 590. Section and View of a Protector, Heat Coil and Test

and serves to protect the fuse and clip from the action of the elements.

When a contact with a power wire occurs the heat coil at the office is operated, and the earthing of the circuit blows the fuse at the boundary of the area, and so prevents the length of wire between that point and the office from remaining "live."

The positions of the fuses are governed by the following rules, which may readily be deduced from the general principles already stated.

1. In the case of a single crossing a fuse is fixed at any convenient point upon either side of the crossing.

2. In a power area one fuse is fixed at the office (or at the junction with the underground) and one just beyond the boundary of the area.

3. A wire passing through an office within a power area requires a fuse at each boundary, and two fuses, either at the office or at the ends of the underground.

4. Through wires passing through a power area

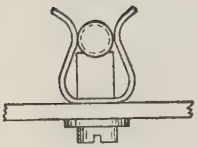

Fig. 591. Side View of Fuse and Clip

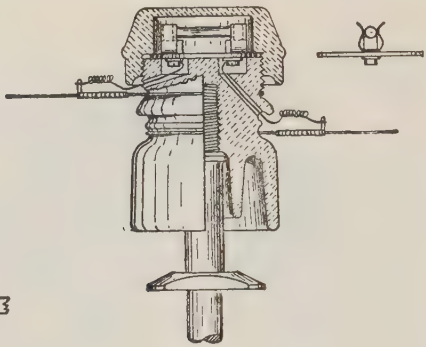

Fig. 592. Fuse Insulator

without entering an office require one fuse at each boundary.

5. In the case of " leak " circuits one fuse is inserted in each wire of the main circuit, or one fuse at each office.

6. The distance between two fuses must not exceed 50 miles, nor must the resistance of the line connecting them exceed 100^{ω}.

A few typical cases may be considered by way of illustration. Consider a head office with a number of telegraph sub-offices served by open wires, all of which are within an area where electric trams are running. Each sub-office would be protected by a 2-line combined

heat coil protector and fuse fitting of the type shown in Fig. 585. At an intermediate office both sides of the fitting would be needed, whilst at a terminal office only one fuse, heat coil, and protector, is required.

Had the wires from the sub-office entered the large office through a length of underground the fuses would be placed in the pole test box at the junction of the open and underground lines.

Conditions 5 and 6 require the addition of a central fuse where the various electric tramway systems form a practically unbroken area of large dimensions. In such cases the 100^{ω} limit for the resistance between the fuses makes it reasonably certain that the fuse will be operated when a contact with the trolley circuit (voltage usually about 500) takes place.

PART IV—POWER CIRCUIT INTERFERENCE WITH TELEGRAPHS*

Electric tramways and railways using uninsulated rail returns for their currents have interfered with the working of telegraph circuits. The Board of Trade limit the voltage drop on the rails to 7 volts, but even with this limitation false signals may be given by the stray currents from the traction systems if the telegraph offices are favourably situated for the current to return to the power station via the telegraph wires. The trouble, if slight, can usually be cleared by increasing the resistance in the telegraph circuit by means of resistance coils, and correspondingly increasing the battery power for working the circuit. The additional resistance reduces the foreign current in the telegraph circuit to a negligible amount, but necessitates, of course, additional battery power to produce the proper working current. Central battery sounder circuits are rarely if ever affected.

* *Power Circuit Interference with Telegraphs and Telephones*, by S. C. Bartholomew. *Proc. I.E.E. Journal*, Vol. 62, No. 334, October, 1924.

The majority of electric tramway and railway systems in this country are worked with direct current, and such systems do not adversely affect telegraph circuits by induction. In some cases, however, railways are worked by single phase alternating current. Extra high tension currents (over 6600 volts) alternating at 25 periods per second are employed, the current being fed into an overhead contact wire and returning to the power station via the train and the uninsulated rails. This system of electric traction has serious inductive influence on telegraph circuits running parallel

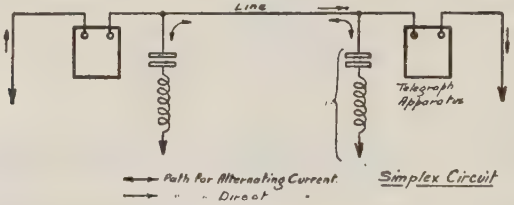

FIG. 593. APPLICATION OF RESONANT SHUNTS TO A SIMPLEX CIRCUIT

to the track, high voltages being induced which cause continuous chattering of the relays. In severe cases it is not possible to bias out the effects, and recourse has to be had to expedients for reducing or shunting the disturbing currents.

As the induced voltages may be very high, the addition of considerable ordinary resistance would be required to cut down the current. Inductive resistances suitable for alternating current are more effective, but where the induced voltages are so great these palliatives are not practicable. The alternative to these methods is the provision of a shunt to the apparatus to take off the induced currents.

Figs. 593 and 594 respectively show the application of such a shunt to simplex and duplex circuits. The method is based on the fact that the current has a definite periodicity or number of alternations per

second, and that an alternating current will flow through a circuit through which a direct current will not pass.

The power circuit inducing the current alternates at 25 times per second and the induced current will also alternate at the same rate. A direct current will not flow through a condenser, whilst an alternating current will flow in a circuit composed of a resistance and a capacity in the form of a condenser, and if the resistance is inductive and the inductance bears a certain relationship to the capacity of the condenser, the resistance of the circuit will be that of the resistance of the inductance only. This state of affairs exists when there is

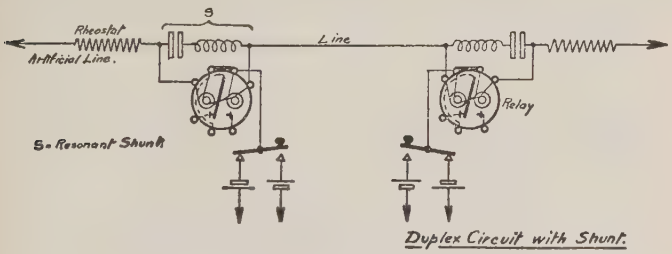

FIG. 594. APPLICATION OF RESONANT SHUNTS TO A DUPLEX CIRCUIT

what is called a resonant circuit, which is expressed in its simplest form in the following formula—

$$n = \frac{1}{2\pi\sqrt{KL}}$$

where n = Alternations per second of the current
K = Capacity in farads
L = Inductance in henries
$\pi = 3{\cdot}1416$

If, for instance, the frequency of the alternating current is 25 per second, then, if K and L are of such values that $\frac{1}{2\pi\sqrt{KL}}$ equals 25, the maximum current will flow through the shunt circuit. Any other value of $K \times L$ will result in a smaller current passing through the shunt with a given induced voltage. Now $K \times L$, with K in microfarads, is a constant figure of roughly 40 which can be obtained in numberless ways. For instance, it may consist of $K = 8$ microfarads

and $L = 5$ henries, or $K = 5$ microfarads and $L = 8$ henries. There are disadvantages with high capacity or high inductance. If a high capacity is employed it will seriously reduce the strength of signals on certain types of circuits, whilst a high inductance involves a high resistance to produce the inductance unless considerable iron is used with the coil, and high resistance will defeat the object of the shunt. Again, if iron is used, then the inductance will vary with the current passing and the shunt will cease to be resonant at all values of current. An air coil inductance is to be preferred on this account, but the resistance would have to be high to produce a reasonable inductance figure. With all these drawbacks, however, it is possible by means of this type of shunt to make circuits workable which would otherwise be unfit for use. Its use is limited to circuits worked at hand speed—as with automatic working alternating current conditions are produced and at certain

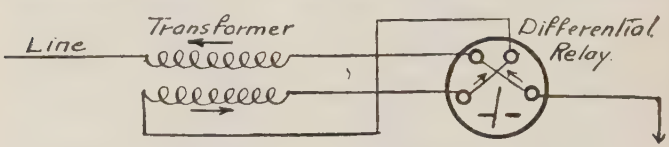

Fig. 595. Elimination of Interference with a Transformer

speeds the signals are distorted owing to the shunt coming into operation and providing a path for the working current. Wheatstone running at about 65 words per minute corresponds to 25 alternations per second, and at that speed and multiples thereof the signals on the slips become multilated and unreadable if a shunt is on the circuit.

A simpler remedy is sometimes effective with simplex circuits. Fig. 595 illustrates the arrangements. It will be seen that the line wire is taken through a transformer and that one coil only of the relay is used for the telegraph working—the other coil being in the secondary circuit of the transformer. The current produced in the secondary circuit of the transformer nullifies or reduces the effect of the induced current in the main circuit at the relay.

There are other variations and refinements of these two methods which cannot be gone into here.

It should not be overlooked that these devices are palliatives only—the efficiency of the circuits is reduced by their presence, and the only really satisfactory remedy is to be found in removing the trouble at its source, which is again a matter outside the scope of this book.

The " H " relay type of circuit (Fig. 500) where underground cable circuits are affected is practically free from inductive disturbances, but its arrangement produces maximum disturbance to neighbouring single-wire circuits.

Inductive interference with telegraphs may attain serious dimensions when the arrangements contemplated by the Electricity Supply Act of 1926 are in being.* Current will be distributed over wide areas by 3-phase 50 periods per second alternating current at 132,000^{v} between the phases. Although the problems created will chiefly concern telephone circuits, it may not be inopportune to point out that serious voltages may be induced in telegraph circuits on the occurrence of faults which necessarily cause large out of balance currents to flow.

PART V—MAIN DISTRIBUTING FRAME AND CABLING

The main frame secures order and permanency of cable terminations by providing a cross-connection field where any desired alterations in allocation of the circuits can be made. The importance of permanency of the cabling in reducing the number of faults can scarcely be over-estimated. The frame carries also the

* " The Construction of the ' Grid ' Transmission System in Great Britain," by Johnstone Wright and C. W. Marshall, *Journal of the I.E.E.*, Vol. 67, p. 685.

" A Critical Study of a Three-phase System of Unarmoured Single-conductor Cables from the Standpoint of the Power Losses, Line Constants, and Interference with Communication Circuits," by E. B. Wedmore, P. D. Morgan, and S. Whitehead, *ibid.*, Vol. 67, p. 359.

fuses, heat coils, and protectors ; it is used also for engineering fault tests.

The standard Post Office main distribution frame is a rigid structure built up of angle iron and is made in units, each of which accommodates 480 wires (Frame Main Distribution $\frac{0}{4\,8\,0}$). Fig. 596 is an end-on view of the frame, from which it will be seen that six fuse and six protector and heat coil fittings are arranged in vertical lines on opposite sides of the frame. Each unit of the frame consists of two such vertical rows arranged side by side. Each fuse fitting (Fig. 598, carries forty fuses (twenty on each side of the iron mounting plate). It will be observed that the fuses are staggered to facilitate removal when required. A protector and heat coil strip is shown in Fig. 597. The protectors are of the " D " type and the heat coils of the " B " pattern (*q.v.*). The underground cables are terminated in cable order on one side of the fuses, and the cables to the test board are similarly connected to one side of the heat coils in cable order. The connections between the two sides of the frame are made with single $12\frac{1}{2}$ lb. enamelled copper wire covered with flame-proof insulation. It will be recognized that any circuit changes may be carried out without interference with the line or instrument cables by means of the cross connecting or " jumper " wires connecting the two sides of the frame. To preserve an orderly cross-connection field insulated rings are placed close to each fuse mounting and also in the centre of the frame (see Fig. 596).

All cross-connecting wires pass through these rings, the principle adopted being to ensure that each individual wire passes through two, and only two, rings—thus ensuring an orderly method of running the jumper wires. In the case of telephone circuits connected to the frame, twin is used instead of single wire for cross connections.

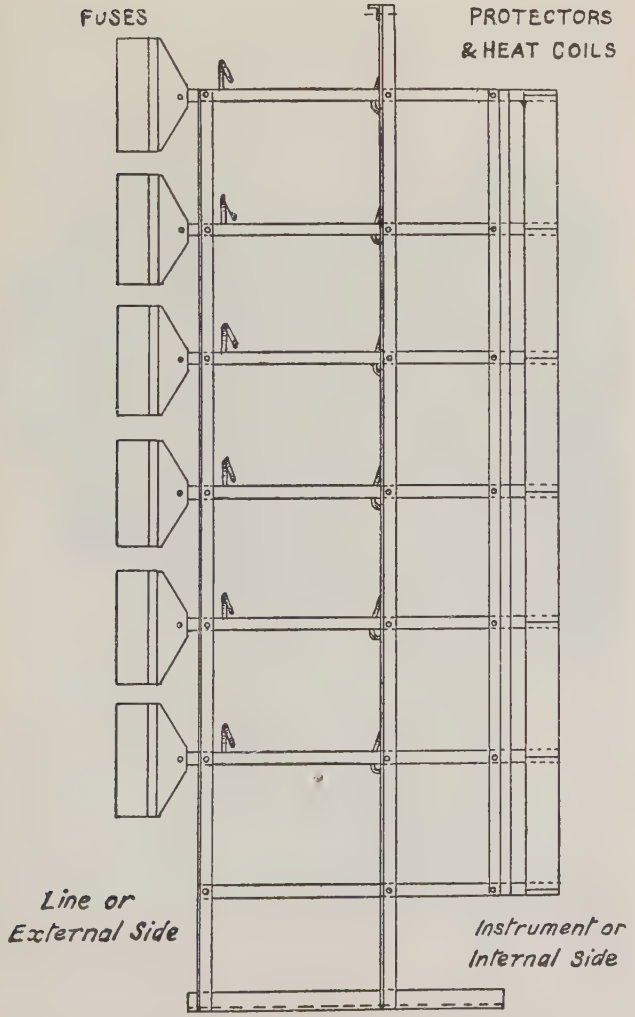

FIG. 596. MAIN DISTRIBUTION FRAME, END VIEW

Fuse Mounting, No. 4028.* This fitting (40 fuses) has a high degree of insulation comparable with that of the cable itself. It is constructed on the grid-gate pattern (Fig. 599) and replaces fuse mounting 4001 for the termination of telegraph, telephone trunk, and other main cables. Cables are connected directly to the fitting, and

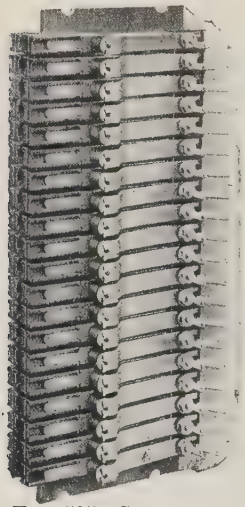

FIG. 597. STRIP OF PROTECTORS AND HEAT COILS

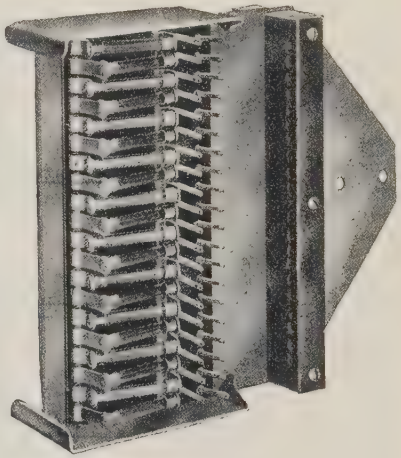

FIG. 598. FUSE MOUNTING No. 4001

the interposition of a high insulation trunk test tablet from which cable tests were made will be saved.

The two vertical strips of tags on each side nearest the fanning strip are used for terminating the cable conductors, the two outside vertical strips of tags being used for the wiring on the apparatus side. There is no crossing of wires as each side of the mounting serves twenty wires, both on the line and apparatus sides. All the wiring connections are inside the gates.

* A new type of Fuse Mounting for the termination of trunk, junction, and telegraph circuits, by A. O. Gibbon, *P.O.E.E. Journal*, Vol. 19, p. 179.

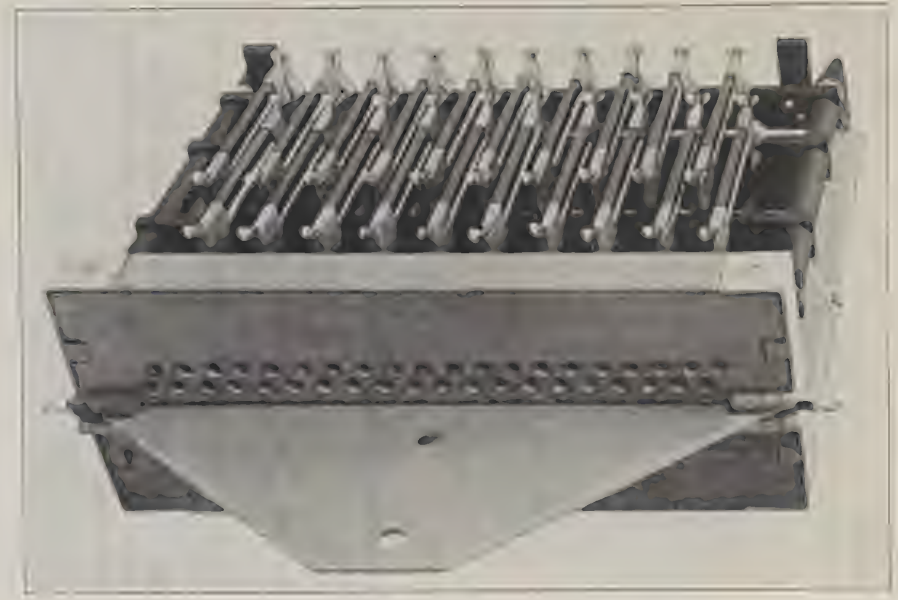

Fig. 599. Fuse Mounting No. 4028

The knife-blade fuse consists of an asbestos-covered wire, set in a slotted strip of ebonite. At each end, the fuse is connected by a screw to a flattened tinned copper sleeve which is knife-edged for insertion in a fuse holder.

Fasteners are provided at the top and bottom of the

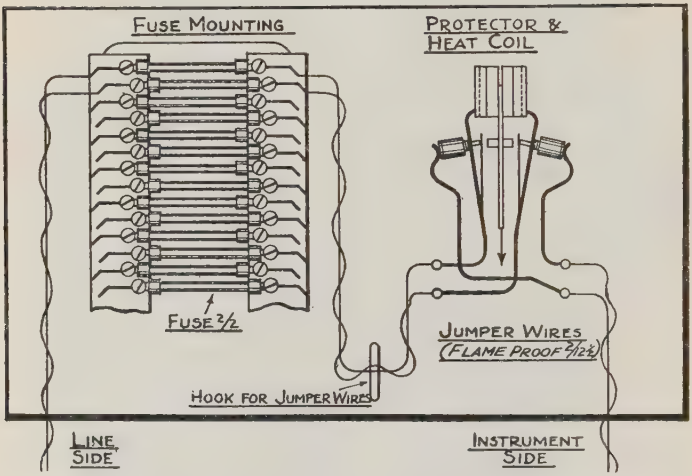

FIG. 600. $\frac{40}{40}$ OR $\frac{80}{80}$ PROTECTOR, HEAT COIL, AND FUSE

mounting to maintain the closed position before fixing the dust cover.

When it is required to make routine or other tests on the cable the fitting is opened out on its hinges and the fuses removed.

Protector, Heat Coil, and Fuse Cases. The needs of a small telegraph office are met by the use of one of two cases accommodating either forty or eighty wires. The lines are laced up to a fuse-mounting type 4002, and the apparatus to the protector and H.C. 40 " B," cross connections being made between the two fittings. Since the apparatus is generally contained within the

section, or is closely associated, a cross-connection field which enables line changes to be made fulfils all requirements.

The fuse-mounting 4002 is provided with screws which serve to connect the fuses, which are provided with tagged ends.

The fitting is contained in an iron tray fixed on the wall and has a metal cover.

Precautions Against Fire.* Although the modern Post Office building with its concreted floors supported by steel joists contains the minimum amount of inflammable material and is practically fire proof, absolute immunity from fire risk ceases when the various fittings, mainly of wood, are introduced. In addition to hydrants and fire hoses, buckets filled with sand, together with asbestos cloths for smothering small fires, are distributed throughout the building. A number of small chemical fire extinguishers is also provided. Lead-covered cables carried on iron cable-racks, in iron casing, or in iron pipes, are employed, and flame-proof wire is used for joining up apparatus. Where cables pass through floors the unoccupied space in the chute is packed with asbestos carried by iron plates at each floor-level so that flames may not, in the event of fire, be carried from floor to floor via the cable chutes.

The complete destruction of the building by fire may be highly improbable, but the consequences to the community would be of so serious a character that the possibility must be considered. Further, in such an event, it is probable that for some time afterwards it would not be safe to approach the building owing to falling debris and the possible instability of the outer walls. Every wire in each cable entering the building is therefore numbered at the first joint from the Post Office, so that every wire may be identified at a point clear of danger. The first jointing chambers on each route are connected by pipes, so that, in the event of fire, through wires may be joined across and terminated wires taken to the temporary telegraph office. Usually, arrangements are made for premises to be available, such as, for example, a part of the town hall or other municipal or State building, and this is connected by pipes to the nearest jointing-chamber. For example, suppose that four routes enter the post office from the N., S., E. and W., and that the premises available for the

* *Vide Precautions Against Fire,* by A J. Stubbs, a paper read before the Institution of P.O. Electrical Engineers, 8th January, 1912.

temporary office are near the S. jointing-chamber. Pipes connect the N. and W., W. and S., S. and E., and E. and N. jointing-chambers and the S. jointing-chamber and the temporary premises. It will be recognized that the pipes form a ring ound the office and that the through wires can, with the aid of suitable cables, be joined through and the terminated wires concentrated and taken from the S. jointing-chamber to the temporary office. Battery power would have to be provided by dry cells, but central battery working could no doubt be arranged in many cases from other offices.

Any open wires which enter the building via the standard are picked up by aerial cables at the first pole or standard from the Post Office—these fixtures being adequately stayed withstand the stresses caused by the collapse of all the wires on the Post Office standard.

It should be appreciated that in the event of the burn out of a main telephone exchange which will take many weeks to re-establish, an enormous burden is thrown on the telegraphs which then constitute the only means of communication. Telegraphic communication can be re-established in another building within a few hours.

Office Wiring. It may be well here to summarize in general terms the details of the scheme of wiring for a large office. Each paper core cable is taken to a point as near as possible and convenient to the main distribution frame, where it is joined to a lead-covered silk and cotton cable which is laced out on the frame (see page 938). The lines are cross-connected with single flame-proof wire to the instrument side of the frame whence 127-wire lead-covered silk and cotton (unwaxed) cables are carried to the test board. Thence, instrument 5- and 7-wire lead-covered silk and cotton cables are carried in iron troughing and are terminated on 7-tag connection strips on each instrument table ; the connections to the instruments and the connections of each set are made with flame-proof wire. The battery connections are made as described in Chapter XVII, Part III, and here again the fire risk is reduced to a minimum.

The circuits on the standard are connected to lead-covered cables at the pothead insulators and the cables carried to the main frame.

CHAPTER XXII

TELEGRAPH TESTING AND THE FORMATION OF SPECIAL CIRCUITS

The efficiency of a telegraph system depends upon the efficiency of the maintenance of the lines and upon the prompt discovery and removal of faults and minor defects. The latter is a matter of importance since, if slight defects are allowed to accumulate, the time comes when their cumulative effect seriously affects the working, and prolonged partial or total stoppage occurs during wet weather, owing to the difficulty and time taken to trace the several minor defects. This is true whether the plant concerned is aerial line, underground cable, or apparatus generally.

The condition of all telegraph and telephone trunk circuits is verified each morning by a test of the actual working conditions by the operators in charge. The tests are made immediately after 7 a.m. on circuits which are open at that time and, in the case of offices not open until 8 a.m. the tests are made as soon after opening as possible. The signalling and speaking tests are made with the apparatus ordinarily used by the operators, and if the results of the tests are unsatisfactory, the matter is reported to the engineers. The nature of the fault, and its position are ascertained. For this purpose all long circuits are led through test boxes placed in some or all of the Post Offices *en route*. Where the sections of line are unduly long, there are pole test boxes or poles carrying dummy fuses. The guiding principle in making these arrangements is to secure the speedy removal of faults, and therefore it is essential that the distances to be traversed by the lineman in search of a fault shall be such that the fault can be located and removed during the first day on which it manifests itself. In some cases, a lineman

starts from each end of the faulty section, and the two men meet at a prearranged point—usually a pole test box or dummy fuse pole. In the event of a heavy gale or snowstorm it is usual to send men through all the main lines without waiting for specific advices of faults

In order to improve the " transmission " or speaking efficiency of long-distance trunk telephone circuits, a definite effort has been made to eliminate these frequent leading-in points. Such circuits are now led in to only one office per 100 miles, and the position of a fault in a section of this length is ascertained by means of a Varley test (*q.v.*).

PART I—INSULATION AND CONDUCTOR RESISTANCE

Effects of Loss of Insulation. In the case of a perfectly insulated circuit the current sent out and the current received at the distant end are each equal to the total E.M.F. acting in the circuit divided by its total resistance. It can be shown that a uniformly insulated circuit may be represented by a perfectly insulated circuit having the same conductor resistance, but with a single earth fault, termed the resultant fault, equal in resistance to the insulation resistance (*q.v.*) at the centre of the circuit. For example, an open line 100 miles long would have about 3000 insulators upon it. Assuming that the resistance of each insulator was 10 megohms and that the resistance of the circuit was 1000^{ω}, then this line is equivalent to a line having a conductor resistance of 1000^{ω} perfectly insulated save for a fault at its centre (500^{ω} from each end) equal to $\frac{10{,}000{,}000}{3000} = 3333^{\omega}$. Where the insulation is not uniform the position of this resultant fault will lie away from the centre of the circuit.

The effect of an earth fault on a circuit is to increase the current sent out (observed on the galvanometer)

and to reduce the current received. This will readily be apparent by considering the case illustrated in Fig. 601. When the circuit is perfectly insulated the current sent out and that received is 9 mA. With the

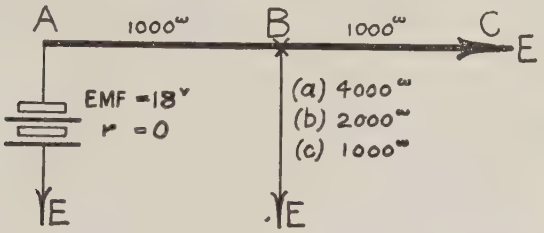

FIG. 601. CIRCUIT WITH FAULT AT THE CENTRE

fault resistances shown, the conditions are as under—

Resistance of fault	Current sent out	Current received
Infinity	9 mA	9 mA
4000ω*	10 mA	8 mA
2000ω	10·8 mA	7·2 mA
1000ω	12 mA	6 mA
0ω i.e. full earth	18 mA	0

It is interesting to notice that when the resultant fault is at the centre of the circuit the current sent out is increased by precisely the amount the received current is reduced as compared with the current sent or received if the circuit is perfectly insulated.

* Resistance of circuit = 1000ω + joint resistance of *BC*, and the fault

$$= 1000 + \frac{1000 \times 4000}{1000 + 4000} = 1800\omega$$

$$\text{Sent current} = \frac{18^{\text{v}}}{1800\omega} = 10 \text{ mA}$$

$$\text{Received current} = \frac{4}{5} \text{ of } 10 \text{ mA} = 8 \text{ mA}$$

Loss (i.e. current through fault) = 2 mA.

The effect of a fault of given resistance upon the working of a circuit is influenced very considerably by its position. The ill effects of an earth fault are greatest when it is at the centre of the circuit and least when at either end.* Indeed, a fault which at the centre of the circuit would render working impossible may, if situated at or near either the sending or receiving end, produce comparatively little effect.

Definition of Insulation and Conductor Resistance. The true insulation resistance of a line is the joint resistance of all the paths along which a current can escape or leak to earth. In the case of an open line it is the joint resistance of all the insulators to the passage of current over their surfaces. The true conductor resistance of a line is the resistance of the line wire itself. The true insulation resistance and the true conductor resistance are entirely separate entities, but in most tests the "apparent insulation resistance" and "apparent conductor resistance" are measured, and in these cases the two measurements are interdependent; for, the apparent insulation resistance is the true insulation resistance modified by the value of the true conductor resistance, and, similarly, the apparent conductor resistance is the true conductor resistance modified by the true insulation resistance. The apparent insulation resistance is always higher, and the apparent conductor resistance is lower, than their true values.

A numerical example in which, for simplicity, the values chosen are widely different from any occurring in practice will best serve to illustrate the principles involved. The line (Fig. 602) is supported by four insulators A, B, C, and D, the insulation resistance of each of which is 100^{ω} and the resistance of each of the three spans of line wire between them is 40^{ω}. The resistance of the line wire itself is 120^{ω} and this is the true conductor resistance of the line. If now a Wheatstone

* Taking the conditions of Fig. 601, but calling the resistance of the section AB up to the fault (including the battery resistance) R, and that of BC away from the fault (including the receiving apparatus) R_1, and the fault f ohms, respectively, then the current received C due to E volts is—

$$C = \frac{Ef}{RR_1 + f(R + R_1)}$$

In this expression RR_1 is the only factor which depends upon the position of f in the circuit, and has its maximum value when $R = R_1$ and is least when either R or R_1 is least.

Bridge is connected between A and earth with D put to earth, a balance will be obtained with 45ω, and this value is the apparent conductor resistance.*

Similarly, the true insulation resistance is the joint resistance of the four 100ω leakage paths and is equal to 25ω. But, when D is insulated and the apparent insulation is measured with a Wheatstone Bridge connected between A and earth a balance is obtained at 47ω.†

It will therefore be recognized that, in measuring the insulation and conductor resistance by a Wheatstone Bridge or by a Megger, the values obtained are true values only when

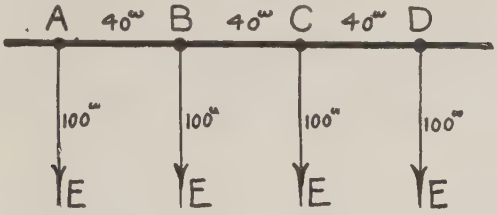

FIG. 602. A CIRCUIT HAVING A CONDUCTOR RESISTANCE OF 120ω AND AN INSULATION RESISTANCE OF 25ω

the insulation resistance is much higher than the conductor resistance.‡

Insulation Resistance per Mile. In order to compare the condition of the insulation on circuits of different lengths it is necessary to obtain the per mileage insulation resistance. Upon a long circuit there are more

* D being earthed the last insulator is short-circuited. The resistance from C is $\frac{40 \times 100}{40 + 100} = 28{\cdot}6\omega$; from B (adding 40ω B to C) is $\frac{68{\cdot}6 \times 100}{68{\cdot}6 + 100} = 40{\cdot}7\omega$; from A (adding 40ω A to B) is $\frac{80{\cdot}7 \times 100}{80{\cdot}7 + 100} = 45\omega$ approx.

† Resistance D to earth is 100ω; from $C = \frac{140 \times 100}{140 + 100} = 58{\cdot}3\omega$; from $B = \frac{98{\cdot}3 \times 100}{98{\cdot}3 + 100} = 49{\cdot}6\omega$; from $A = \frac{89{\cdot}6 \times 100}{89{\cdot}6 + 100} = 47\omega$ approx.

‡ The true conductor resistance R_t of a uniformly insulated line

insulators than on a short one and therefore more paths of leakage. Assuming that the insulators in the two cases have equal resistances, the longer circuit will have a lower insulation resistance. Hence—

Insulation per mile = total insulation × mileage.

For example, if the total insulation of a circuit 83 miles long is 30,000ω, the insulation per mile is 2,490,000ω, or approximately 2·5 megohms. The only case in which this rule does not accurately apply is when the insulation resistance is abnormally low or the conductor resistance is abnormally high. In this case the result obtained by multiplying the total insulation by the mileage is too high. Generally speaking the total insulation resistance, save upon very long circuits, is considerably higher than the conductor resistance, and in that case the rule given is sufficiently accurate for all practical purposes.*

having an apparent insulation I and apparent conductor resistance of R ohms is—

$$R_t = \frac{\sqrt{IR}}{2} \log_\epsilon \frac{\sqrt{I} + \sqrt{R}}{\sqrt{I} - \sqrt{R}}$$

The true insulation is—

$$I_t = \frac{2\sqrt{IR}}{\log_\epsilon \dfrac{\sqrt{I} + \sqrt{R}}{\sqrt{I} - \sqrt{R}}}$$

If the insulation resistance is at least 5 times the conductor resistance the following formulae are correct to 1 per cent—

$$R_t = R\left(1 + \frac{R}{3I}\right) \text{ and } I_t = I - \frac{R}{3}$$

(Chapter XXVII, Kempe's *Electrical Testing*, 6th edition.)

* The true insulation resistance per mile i is the apparent total insulation I multiplied by the ratio of the apparent conductor resistance R to the true conductor resistance per mile r—

$$i = I \times \frac{R}{r}$$

Example.—The measured or apparent total insulation resistance of a circuit 200 miles long having a conductor resistance of 12ω per mile is 2500ω and has an apparent conductor resistance of 1200ω.

By ordinary rule, $i = 2500\omega \times 200 = \cdot 5$ megohm

By corrected rule, $i = 2500\omega \times \dfrac{1200}{12} = \cdot 25$ megohm

(*Vide* Kempe's *Electrical Testing*, pp 541, 542.)

When two or more circuits are connected together, either by extension or by forking, the total insulation of the combination is the joint resistance of their separate insulation resistances. The conductor resistance may generally be ignored, and therefore the laws explained in detail on pages 54 and 55 may be applied.

In practice it is often necessary to make insulation tests to successive points on a circuit in order to determine which section is defective.

Example.—A circuit 50 miles long has a total insulation of 25,000ω. Tested to an intermediate point 20 miles distant its total insulation is 40,000ω. What are the per mileage values of the insulation resistances of the sections ?

Whole circuit, insulation per mile = 25,000 × 50
= 1·25 megohm

Insulation per mile of first section = 40,000 × 20
= ·8 megohm.

$$\text{Total insulation of distant section} = \frac{1}{\frac{1}{25{,}000} - \frac{1}{40{,}000}}$$

$$= 66{,}667\omega$$

Insulation per mile of distant section = 66,667 × 30
= 2 megohms.

It is rarely required to know the true value of the insulation with very great accuracy, and in most cases a result correct to 10 per cent, or even 20 per cent, will suffice.

Working and Maintenance Standards. Whenever the total insulation of a circuit falls below the conductor resistance, the working speed of the circuit is reduced. In the case of short lines, the insulation may fall to an extremely low value before any trouble results, since the conductor resistance of the circuit is low, and the theoretical maximum working speed far in excess of the possible working speed, as limited by that of the apparatus used. For example, a 400 lb. iron wire circuit 50 miles long has a conductor resistance of 666ω, and therefore the insulation might fall

to ·033 megohm per mile. With a circuit 200 miles long the conductor resistance is 2664$^{\omega}$, and to have a total insulation resistance of 2664$^{\omega}$ the insulation resistance per mile must be ·53 megohm. If the length is 400 miles the insulation per mile required is 2·13 megohms—a value which cannot be obtained during wet weather. The remedy is, of course, to use a wire of lower conductor resistance. The point to be noticed is that the longer the circuit the higher is the character of the insulation needed—in fact, the degree of insulation required varies directly as the square of the length of the circuit. It may again be pointed out that an insulation resistance in excess of the value given by this rule does not reduce the working speed.

Opposite each wire upon the test sheet is given the value of the insulation resistance per mile, corresponding to a total insulation equal to the conductor resistance. This is termed the "working standard" of the circuit. Where a route of wires contains both long and short lines, the whole of the wires are, of course, maintained at the values required upon the longest circuits. The minimum standard of insulation for open lines, known as the "maintenance standard," is $\frac{1}{5}$ megohm per mile, but, as has been shown, this value is inadequate to the needs of long circuits, and therefore the condition of any circuit falling below either the working or the maintenance standard is unsatisfactory.

CONDUCTOR RESISTANCE TESTS

As a rule, a small variation in the resistance of a telegraph circuit has no effect on its working so long as the change is stable. But, a small change varying in amount from moment to moment will seriously affect a duplex circuit. Dry joints (i.e. unsoldered joints) or loose connections will produce this condition. Pronounced defects of this kind cause the needle of the bridge galvanometer to swing from side to side when making a measurement.

"Varying conductivity" faults, as they are usually termed, are treated in precisely similar fashion to insulation faults.

Slight earth currents are nearly always present upon telegraph lines, and when measuring the conductor resistance it is therefore necessary to take two measurements, one with each direction of current. The true resistance may then be assumed to be equal to the arithmetic mean (sum divided by 2) of the two tests. When the earth current is such as to produce a considerable difference, the geometric mean (square root of the product) should be taken, as this is a nearer approximation. For example, let the readings obtained be 1520^{ω} and 1530^{ω}, the actual resistance of the circuit is then $\frac{1520 + 1530}{2} = 1525^{\omega}$.

In this case the geometric mean, i.e. $\sqrt{1520 \times 1530}$, is practically the same. Had the two tests given 50^{ω} and 150^{ω} the results obtained would differ considerably, the arithmetic mean being 100^{ω} and the geometric mean $(\sqrt{50 \times 150})$ being $86{\cdot}6^{\omega}$, which is very approximately correct. To summarize, it may be said that where the two tests differ but little, the arithmetic mean is sufficiently correct, whilst in cases of considerable percentage difference, the results so obtained are too large and the geometric mean should be taken.

Another way of dealing with earth currents is to balance to a "false zero." The zero of the galvanometer is considered to be at the value of the deflection obtained when the galvanometer key only is down. It must, however, be remembered that every time an alteration is made in the resistance in the box this deflection is altered, and therefore the process is somewhat tedious. A balance is obtained when the deflection obtained by depressing both keys is equal to that produced by the galvanometer key alone. Yet another

method consists in bringing the needle to zero by means of a magnet, but the same objection applies as to the previous method, viz. that every alteration in the resistance entails a readjustment of the magnet. It may, however, be added that the operation of taking the tests is scarcely as troublesome as would be expected. A third method (due to C. E. Hay) consists in placing an 8 m.f. condenser in series with the Paul galvanometer on a Wheatstone bridge and obtaining a balance in the ordinary way. Kicks take the place of permanent deflections during balancing operations.

The correction necessary, when making measurements by the voltmeter method, is dealt with on page 980.

Individual Resistance of a Number of Circuits Between the same Two Points. It is frequently required to measure accurately the resistance of several wires between two particular points. The use of an earth connection for this purpose is not entirely satisfactory, since slight earth currents are always present and the resistance of the earth connection itself is a somewhat uncertain quantity. Moreover, electric tramway systems have been rapidly developed, and the leakage currents vary in value from moment to moment, rendering the taking of an accurate balance most difficult—if not actually impossible. In such cases, where three or more wires connect the two points in question, the individual resistances of the wires can readily be obtained. At the distant end the wires are all bunched together, and the resistances offered by various combinations are measured.

Let A, B, and C (Fig. 603) represent three wires, the individual resistances of which are required. The following tests are made—

1. The resistance of A and B is measured
2. ,, ,, B and C ,,
3. ,, ,, A and C ,,

The results of the first two tests added together give the resistance of A, the resistance of C, and twice the resistance of B. If the result of the third test (A and C) is now deducted the remainder is equal to twice the resistance of B. Dividing this by 2 gives the resistance

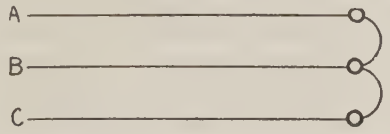

FIG. 603. WIRES LOOPED FOR THE INDIVIDUAL CONDUCTOR RESISTANCE TESTS

of B alone, whence the resistances of A and C are at once evident.

As an example let the results of the tests be as under—

(1) 231ω	(2) 255ω	(3) 234ω
A and B	$= 231$	
B and C	$= 255$	
A and C and twice B	$= 486$	
A and C	$= 234$	
Twice B	$= 252\omega$	
B	$= 126\omega$	
$\therefore A$	$= 231 - 126 = 105\omega$	
and C	$= 234 - 105 = 129\omega$	

Had the number of wires been greater than three the same principle would be applied. Knowing C and measuring the value of C and D would determine D. Knowing D and measuring D and E would give E, and so on.

Formulae after the fashion of that given below may be derived, but as the principle is so simple and obvious their utility is distinctly doubtful.

$$\text{Resistance of } B = \frac{(1) \quad (2) \quad (3)}{(A + B) + (B + C) - (A + C)}{2}$$

PART II—PERIODICAL TESTS

The per mileage value of the insulation resistance enables the condition of various circuits to be compared directly. In the case of a route of a dozen wires,

the fact that a lower insulation is obtained upon a particular circuit indicates the presence of a minor defect, and the cause is then ascertained by examining the line. Again, lines between the same two points, but following different routes, may be very closely compared, since the climatic conditions are the same, and any considerable difference in the values obtained indicates that attention is required. The careful scrutiny of the results of the periodical tests is a work of very great importance, and should be followed by investigating and remedying every abnormality as it arises. Thus, the accumulation of minor defects which, taken separately, may have little or no effect upon the working of a circuit, is prevented. The ill-effects of such defects increase with the length of the circuit.

Again, the condition of wires maintained by the different administrations may be compared.

The tests are made with a 250^{v} megger (*q.v.*) reading from 1000^{ω} to 20 megohms. With the aid of tables the insulation resistance per mile is entered on forms sent to the Engineering Department, where the results are scrutinized and steps taken to locate and remove any defects revealed.

In the case of very large offices a motor-driven megger mounted on a stand provided with wheels (after the fashion of a refreshment stand) is used to save the labour of turning the handle, and it has been found that one insulation resistance test per 5 seconds can be made.

The bridge megger is also used for conductor resistance tests, but a D rheostat, to which are added four extra plug coils (1^{ω}, 2^{ω}, 3^{ω}, 4^{ω}), replaces the relatively costly dial resistance box. With the aid of the 10^{ω}, 20^{ω}, and 4000^{ω} coils, it will be found that any resistance from 1^{ω} to 8440^{ω} may be obtained by gradations of 1^{ω}. The value of the periodical conductor resistance tests is to show up any cases of loose or defective connections or line wire deterioration.

The various tests are taken at scheduled times, so that the requisite loops, earths, or disconnections are, as a matter of routine, made at the offices to which the tests are taken. It has previously been pointed out that looping strips are provided for this purpose—upon test boards of the switch-spring type.

Periodical Testing of Overhead Circuits. Insulation resistance tests of telegraph and telephone circuits of 50 miles or over are made once a month by means of the " megger." The method of conducting this test, also a full description of the megger instrument, is given on page 162.

Telegraph circuits over 50 miles in length are tested for conductor resistance by the " bridge megger " once in three months. Wherever possible these tests are made in pairs, looped together at the distant end. If this is not possible the wires are tested singly with earth at the distant end.

Telephone trunk circuits 50 miles long or over, are tested once a month by means of the " bridge megger " on the earthed loop, by the " Varley " method, as explained on page 975, in order to ascertain whether each wire of a telephone pair has equal resistance.

The results of the insulation and conductor resistance tests are regarded as unsatisfactory if—

(*a*) The insulation of a wire is proved to be considerably lower than that of the majority of the wires following the same route.

(*b*) The insulation of any wire falls below the " calculated minimum " figure shown against the particular circuit or section of circuit in the standard records. This figure gives the insulation of the circuit at 200,000 ohms per mile.

(*c*) The conductor resistance is found to be more than 25 per cent above the calculated resistance.

(*d*) The conductor resistance of the *A* and *B* wires of a pair differ by more than 3 ohms in a testing section.

Steps are taken to locate the position of the faults whenever the periodical tests indicate unsatisfactory conditions. If the conductor resistance of a wire has increased by more than 25 per cent of the calculated figure, arrangements are made to gauge the wire at intermediate points throughout its length, and this precaution is very necessary in districts where chemical action is likely to occur.

Pairs of wires forming a telephone circuit which show unequal conductor resistance, are taken for further test at slack periods of the day when traffic conditions allow. The fleeting character of certain faults which are responsible for unequal conductor resistance makes such faults difficult to trace, and only a small battery power should be used in testing such circuits.

Periodical Tests of Main Underground Cables. Wherever telegraph and telephone cables are led into a telephone repeater station, arrangements are made to test every circuit in such cables once a month by dealing with a certain number of circuits daily.

Cables which do not enter telephone repeater stations have a proportion of the wires tested monthly, the arrangement being to select 5 per cent from the outer layer of the cable and to test the same pairs every month. In addition, a further 5 per cent of conductors is tested monthly, but these conductors are changed each month in order to ensure that every circuit in the cable is tested within a period of two years. The tests are made on the *A* wire with the *B* wire earthed and vice versa.

The minimum insulation of main underground cables is 10,000 megohms per mile per wire for all cables laid since 1920, but a number of cables were laid at a time when a standard of 500 megohms per mile per wire was considered satisfactory. If in the latter case the insulation tests show a value above 500 megohms and the readings continue steady, the cables are regarded as satisfactory, but if the tests in either case indicate a

falling or varying insulation, steps are taken to locate and remove the fault.

Junction cables are tested once a month between the main frames at the respective exchanges on a few selected pairs in the layer nearest to the lead sheath and wherever possible spare pairs are selected for the purpose.

The standard of insulation for junction cables laid since 1920 is 5000 megohms per mile per wire. In the case of junction cables laid before 1920 the conditions set forth above for main underground cables apply in this case also.

Telephone Subscribers' Circuits. Voltmeter tests are carried out from the test desk in order to ascertain the insulation resistance of the subscribers' circuits working on automatic and manual exchanges.

For a subscriber's circuit of any length and composition, and including the apparatus and internal wiring, the maintenance standard of insulation resistance is 250,000 ohms on each wire of the pair tested to earth, or between the two wires of the pair. All circuits falling below a standard of 250,000 ohms should be scheduled and tested weekly, but not thrown out of service.

Should any circuit fall to 150,000 ohms, or, after four successive weekly tests, remain below 250,000 ohms, the case should be treated as a fault.

In the case of all faults on underground cables, whether in main, junction, or subscribers' networks, the distance of the fault in ohms from the testing office is given wherever possible by means of the Varley loop test, as explained on page 975.

Conductor resistance tests of main underground cables are made monthly. Five per cent of the conductors are tested each month and the conductors are changed monthly in order that the whole of the cable may be tested within two years. These tests are made in order to prove that the wires forming a pair are of equal resistance. In addition, a selected pilot pair in

the cable is tested each month for the observation of seasonal variations of resistance.

PART III—FAULT LOCALIZATION

When a wire is reported faulty by the telegraphist in charge of the circuit, the test clerk at once proceeds to localize the position of the fault between the successive offices *en route* in the manner subsequently described ; but, before dealing with the line itself, he makes quite certain that the fault is not in the apparatus or the leads from the instrument to the test box. This applies to every class of fault.

A book, or a card record, containing particulars of every wire, together with the names and stations of the officers responsible for the good working of each length of the circuit, is kept near the test box at each testing office. When the fault has been localized this record is consulted and the officers responsible for the good working of the circuit are advised by service message.

Various Types of Fault. Faults may be divided into three classes, viz. earths, disconnections, and contacts. In each of these classes the faults differ in degree, and the terms *full* and *partial* are used respectively to describe the very pronounced and the slight faults, in the case of earths and contacts. The disconnection faults range from a total disconnection down to a partial disconnection or even a " loss of conductance," which means simply a few ohms increased resistance due to a defective connection or to an unsoldered, or " dry," joint as it is termed.

A fault may be in continuous existence or it may only appear at intervals. The latter class of fault is indicated by prefixing the word " intermittent " to the description of the fault. For instance, the terms " intermittent contact " or " tapping contact " means a contact which only occurs at intervals.

Localization tests are made with the test box

galvanometer and its accompanying switch, described later.

The name of every office is abbreviated by allotting codes consisting of either two or three letters; for instance, *TS*, *GW*, *BE*, and *BBZ* denote respectively London, Glasgow, Belfast, and Barrow. Where more than one circuit is provided between the same pair of terminal offices the circuits are distinguished by numbering from 1 upwards. For instance, *TS-GW2* denotes the second circuit between London and Glasgow. A similar procedure has been adopted in the case

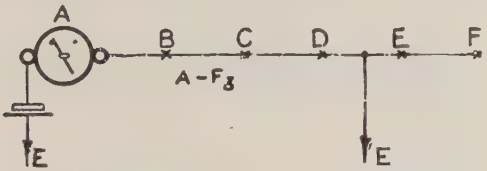

Fig. 604. Localizing an Earth Fault

of the imaginary No. 3 circuit between *A* and *F* which passes through *B*, *C*, *D*, and *E en route* (Fig. 604).

Earths. In order to localize an earth fault the line is successively disconnected at the various testing points, and it is then ascertained up to which point the circuit is perfect and beyond which point it is defective. For this purpose an earthed battery and galvanometer are joined to the wire as shown in Fig. 604. The wire is first disconnected at *F*, and the degree of the fault judged. Where the fault is of a very slight character its resistance is measured with the megger, and is stated.

Leaving the wire disconnected at *F*, *E* is next requested to "dis. *A-F*3." Upon receipt of this reply from *E* ("*A-F*3 dis."), the wire is again tested by applying the earthed battery and galvanometer. In the present case the galvanometer is deflected, thus indicating that the fault exists between *A* and *E*. *D*

is now requested to disconnect the circuit, and upon again testing the earth fault has disappeared. In other words the circuit is clear A to D, but faulty A to E, therefore the fault is between D and E.

In the case of earth faults it is advisable to have the circuit successively disconnected from the terminal towards the testing station, since there is then no need to await replies that the circuit has been joined through by the various offices.

Disconnections. The various offices *en route* are successively requested to earth the wire and the earthed battery and galvanometer applied as in the

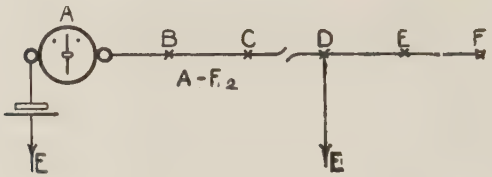

Fig. 605. Localizing a Disconnection

case of earth faults. In the present instance the presence of a deflection proves the continuity of the circuit between the two testing points, whilst the absence of a deflection denotes the presence of a disconnection in the section under test (Fig. 605).

A central office may be asked to earth the wire so as to reduce the number of tests required.

Care must be taken not to make a second test until it is known that the first office has taken off his earth.

Contacts. It should first be ascertained that the contact is not in the leads from the instrument to the test box. If such were the case the instruments would, of course, affect each other when both wires were disconnected at the test box. In large offices, where the instruments are beyond view from the test box, the instrument side should be tested in the same way as the line.

To test for a contact an earthed battery is connected to one line and an earthed galvanometer to the other, the lines being disconnected at the distant end. If the two wires are in contact the galvanometer is deflected. A battery and galvanometer joined in series (i.e. without an earth connection) with the lines is not satisfactory, for the reason that an earth fault upon each of the lines would give the same result as a contact and a wrong locality could very easily be given. The condition is illustrated in Fig. 606, where a wire going due west would be found to be in contact with one going due east, whereas two earth faults only

FIG. 606. ILLUSTRATES NECESSITY FOR EARTH CONNECTION WHEN TESTING FOR CONTACT

exist. If two such wires were found to be in contact the fault could only be in the leads from the test box to the two routes, or possibly the wires might travel together in a common direction for a short distance. Thus the length in which such a fault could occur would be well known to engineering officers. The addition of the earth connection between the galvanometer and the battery, as in Fig. 607, ensures that a deflection shall result only when the two wires under test are in contact.

Either of the two wires may be worked by disconnecting the other, and if it were decided to work A-K_1, then H would be advised to put this through, and C-M_2 would be left disconnected at the box or disconnected at D and E. If a spare line between D and E is available a cross could be made and both circuits worked.

It is the practice periodically to test all faulty circuits to see if the fault has been removed, thus ensuring that the wires shall not needlessly remain idle.

It will be seen that localization tests are of an extremely simple character, but the utmost care should be taken. A mis-test, i.e. the reporting of a fault to exist in a wrong section, entails the examination of that section by the lineman, and it may not be found out that a mistake has been made until it is too late to get the fault removed the same day. Again, where a large number of tests are being made, the work must be done systematically, and attention is directed to the importance of receiving replies that particular operations have been performed before proceeding further with the tests. Moreover, a considerable local

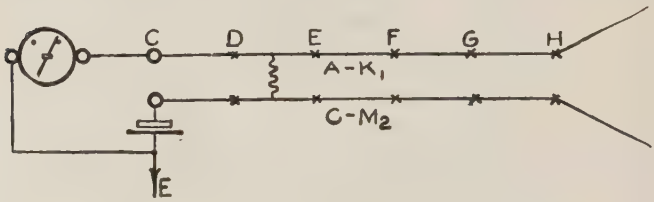

Fig. 607. Localizing a Contact

knowledge of the routes taken by the various circuits is highly desirable, as it tends to expedite the process of testing and advising the existence and locality of faults.

Intermittent Faults. Faults of this class require the very greatest care in localization in order to avoid mis-tests. They are localized in precisely the same manner as the permanent faults already dealt with. If the fault is an intermittent earth the circuit is disconnected successively and it is ascertained by carefully watching for its reappearance that it occurs when the wire is disconnected at one point and does not do so when the disconnection is one office nearer the testing station.

Where the wire cannot be given up for prolonged tests the locality may be ascertained by crossing

successive lengths of the circuit with those of another circuit known to be in perfect condition.

For example, let A-F_3 (Fig. 604) be the faulty circuit, and let A-F_2 (Fig. 605) be known to be in perfect condition. It is assumed that the fault does not very seriously affect the circuit and that the traffic is so heavy as to render it inconvenient to give up the circuit for testing purposes.

The following notes contain a summary of the operations involved—

1. B is requested to cross A–F_2 and A–F_3 at —— (a time is given so that the message can easily be attended to at the time stated).

2. At the given time B makes the cross and A also crosses the two lines. If the fault reappears on A–F_3 the fault is beyond B.

3. C is next told to cross the wires, and at the time given this cross is made and the wires put straight at A. If the fault now appears on A–F_2 it is evident that it is between B and C.

If the crosses are made rapidly and punctually, the circuits should not be interrupted for more than one minute for each cross. Generally speaking, this method finds little favour, and it is only adopted when the faulty circuit cannot be spared and a spare or reserve wire cannot be obtained to cross with it.

Underground wires are far less subject to faults than open lines, and when faults exist on lines partly open and partly underground it may generally be assumed that the fault is on the open sections, but when doubt exists a test is made to the pole test box at the end of the underground section.

Test Tablets. Localization and other tests made at the test board are facilitated by the provision of a test tablet, arranged so that the required testing conditions may be established by the insertion of U-links. The 7-test-hole type illustrated in Fig. 608, is used on one panel test boards of the switch-spring pattern. The galvanometer (No. 1A) is mounted on a turntable bracket and a 20-cell Leclanché battery is used for the tests.

On switch spring boards larger than the one-panel size a test tablet having twenty-two test holes is placed upon the rail between the panels. The upper portion, containing eight test holes, is used for connecting the

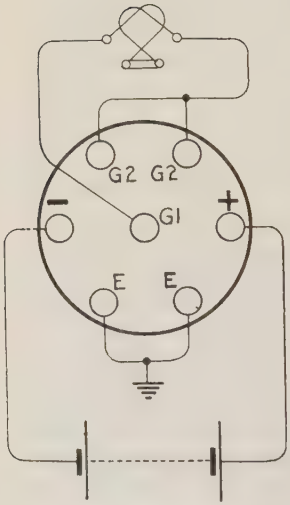

Fig. 608. Test Tablet, 7-hole

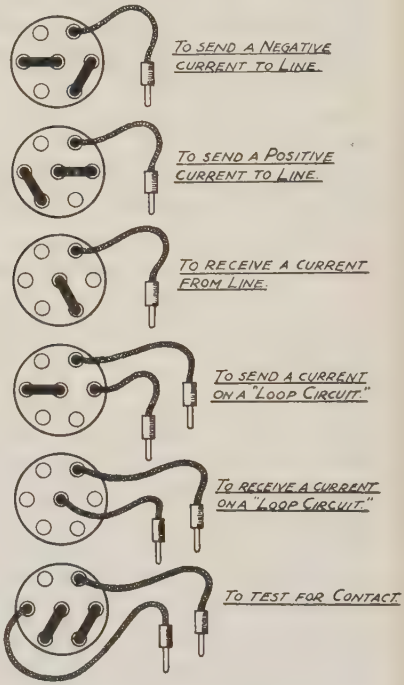

Fig. 609. Testing Conditions

megger or other measuring apparatus to the lines for periodic and special tests. The lower set of eight holes is connected to the test-box speaking sets and calls for no further comment. The central tablet provides precisely the same facilities as the 7 test-hole tablet just considered, and the method of making the various combinations will be quite apparent from Fig. 609.

The galvanometer is of the ordinary differential pattern (see Fig. 47), and is mounted upon a turn-table bracket above the test-hole tablet.

CAUSES WHICH PRODUCE FAULTS

As a conclusion to this section of the chapter it will be of interest briefly to consider the causes which produce faults upon the lines. The explanations will, however, assume some

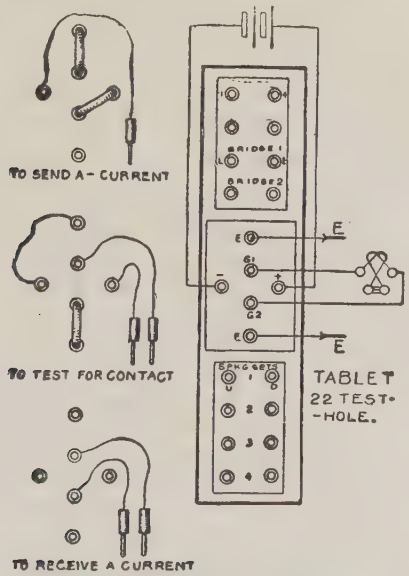

FIG. 610. TEST TABLET (22 TEST-HOLE)
Connections required for localization testing are shown on the left

knowledge of the subsequent chapters, and this section may with advantage be re-read after the sections on construction have been considered. Faults upon aerial lines will be dealt with before, and separately from, underground faults.

With earth faults the degree is, of course, often dependent upon the climatic conditions, and a fault which in fine weather is slight may become full or total in wet weather. Moreover, the longer the circuit, the greater is the deleterious effect of an earth fault of given resistance. Its effect also varies with its

position, being felt most when in the centre and least when at the ends of the circuit.

A full earth may be produced by the line wire, released from the insulator, touching the earth wire upon the arm, or by contact with any part of the metal upon an iron pole. The same effect results from the line wire coming into contact with anything which forms a good earth connection, such as a stay wire. With iron wire circuits, the binding sometimes gives way, due to corrosion, and the effect of the wind releases the line wire. Again, the insulator may be broken by stone-throwing, a practice which cannot be entirely stamped out, notwithstanding the efforts of the police and the frequent prosecutions which result.

Much difficulty is caused by the proximity of trees, and in wet weather a very pronounced fault may be caused by the line wires becoming entangled with the branches. Along country roads it is most difficult to avoid the trees which overhang the footway, and occasionally some difficulty is experienced in enforcing permission to cut away the branches which jeopardize the satisfactory working of the circuits. Serious break-downs resulting in the total stoppage of a route are usually caused by trees being uprooted by a gale and blown over upon the line.

Earth faults of a slight character are often caused by broken or cracked insulators—usually the result of stone-throwing. When the line wire is released and rests upon a dry portion of the wooden arm, remote from the earth wire, the resultant fault is not of a very pronounced character. Similar remarks apply to contacts between the wires and the branches of a tree. In fine weather these defects are of a slight character, but during the prevalence of rain become much more pronounced.

Intermittent faults are produced by any of the causes mentioned, but the conditions are varied by the wind causing the wire to move. A wire may be blown into contact with a stay by each gust of wind, or conversely the stay may be brought into contact with the line by boys swinging upon the stay wire or by cattle rubbing against it. Again, the gusts of wind may blow the wires into contact with the branches of a tree, for it must be remembered that the wires may be swung outwards to a distance almost equal to the amount of their sag or dip. Some of these intermittent faults result from the most extraordinary and unlooked for causes, but it would scarcely be profitable to give a long list of these happenings.

Contacts are produced by defective regulation of the wires or by a wire, released from its binding, making contact with one

of the other lines. Also, contacts very frequently result from pieces of wire, chain, kite-strings, etc., being thrown over the wires. If a piece of wire or chain lies upon the roadway it is only a question of *how* long it will be before it is thrown on to the wires, and this is why telegraph foremen and linemen are so careful never to leave any odd piece of wire upon the road. In wet weather string and cotton produce a fairly effective contact.

The absence or defective condition of the earth wires upon a long line produces "weather contact" (*q.v.*) whilst a defective earth at a telegraph office results in an apparent contact between all the circuits. Slight contacts are usually produced by substances of low conductivity being thrown across the wires. In one case (in England) such a fault was found to be caused by the dead body of a snake!

Intermittent contacts usually result from the action of the wind; the wires are blown together at each gust, or a chain or a piece of wire depending from one wire swings into contact with another. But little imagination is needed to indicate how many possible variations of these effects may produce faults.

A disconnection is caused by the breakage of the wire, which may be due to defective joints, defective regulation, natural decay of the wire produced by the action of the elements, or by chemical fumes with which the air in the particular locality is laden. Again, the wires may be broken during blasting operations, near rifle ranges, or by trees, chimneys, or other objects falling upon the line. Defective joints are comparatively rare. When the renewal of the wire has been too long delayed breakages occur at the weakest positions. With copper wire erected in country districts oxidation is practically unknown, but in course of time (20 to 30 years) the wire becomes very brittle and breakages result. When the air is laden with fumes from chemical works the wire, of course, decays much more rapidly.

Yet another cause of trouble is the accumulations of snow and ice which adhere to the wires, thereby very greatly increasing the stress upon them. It is, however, only in acute cases that the wires are broken, but it is often necessary to cut and regulate them when the snow and ice have disappeared.

Kinks in the wire, due to careless handling in erection, and flaws or defects in manufacture may produce fractures, but these causes do not often operate owing to the efficiency with which the work is carried out and the care with which the various tests are made at the manufactory before the wire is accepted.

If the fallen wire rests upon dry ground the resulting earth may be slight, but, usually, the line is almost full earth and frequently in falling it makes contact with other wires below it.

A slight fault, i.e. defective continuity, may be produced by an unsoldered, or badly-soldered, joint—the former often resulting from the omission to make good after a temporary repair.

In every case dealt with so far, attention has been directed to the line itself, but, in addition, there are the pole test boxes, dummy fuse poles, ordinary test boxes, lightning protectors and fuses *en route*. Total and partial disconnections may be caused by broken or loose connections at any of these points. Earths are frequently found in the protectors, especially after thunderstorms. Again, the leads may be defective, but the possible causes are so many, and the actual number of faults so small, that a catalogue of all the ills to which a line is subject is quite unnecessary.

As regards underground wires, the relevant sections, Chapter XXIII, need but little addition. Faults are generally caused by failure of the lead sheathing and the subsequent entrance of moisture or water. At the moment, the most prolific cause is due to the electrolytic action of stray current from tramway systems (*q.v.*). Some few faults are primarily due to defects in manufacture and are generally recognizable by longitudinal splits in the lead sheathing. Occasional faults are due to defective plumber's joints or to the piercing of the sheathing by picks, bars, or wedges during road reconstruction or re-surfacing. Then, too, there has recently appeared a new type of trouble confined to very heavily trafficked roads. In some cases where the cables are at fairly shallow depth, the vibration produced by heavy motor lorries has caused the cable to creep bodily along the duct in the direction of the traffic passing over it. This has led to breakage of joints and the admission of moisture. Fortunately, fixing of large wood blocks to the cable in the manholes at each end of each cable length is an effective and simple remedy.

There are occasional cases where electric light cables develop faults and the burn out involves telegraph cables near by.

Faults are also caused by subsidences—due to the collapse of old workings or the washing away of sand by underground streams.

These happenings, whilst serious in the aggregate, are relatively negligible when expressed as a percentage of circuits affected to those unaffected.

PART IV—UNDERGROUND CABLE TESTS

The system of main underground cables will ultimately link up all the larger towns in the kingdom, and long aerial routes will gradually disappear as they reach the end of the period of their economic life. Early warning of any fall in the insulation of a main cable is essential in order that the defect may be located and removed before it develops into a fault affecting all the circuits in the cable. For this purpose very sensitive apparatus in the charge of specially trained officers is provided in each engineering district, but these tests are of a character beyond the scope of the present work and it must suffice to say that the tests and confirmatory calculations are refinements upon the Varley and Murray tests, described later.

The maintenance standard for main cables laid since 1920 is 10,000 megohms per mile per wire. Tests are made on such cables for insulation and conductor resistance once a month with the 500-volt megger. Ten per cent of the wires in the cable are tested monthly for insulation; 5 per cent being selected from the outer layer of the cable and from wires passing through stub cables at loading points. The remaining 5 per cent is distributed over the other portion of the cable and changed monthly to ensure that every circuit in the cable is tested within a period of two years.

Conductor resistance tests of main cables are made monthly on not more than approximately 5 per cent of the total number of conductors in the cable. The conductors are changed monthly in order that the whole of the cable may be tested within two years. In addition, a selected pilot pair in the cable is tested each month for the observation of seasonal variations of resistance.

It must not be forgotten that the termination of main cables is always open to suspicion when dealing with very high values of insulation resistance.

When making insulation tests on main cables the insulation resistance should be read after the testing current has been applied for one minute—termed one minute's electrification. It is important that on loaded cables the megger should be allowed to come to rest before the testing plug is withdrawn, so that there may be no injury to the loading coils by heavy discharge currents due to the capacity of the cable.

Electrification. If an earthed battery and galvanometer are connected to a gutta-percha insulated wire disconnected at the further end (as shown in Fig. 611), it will be observed

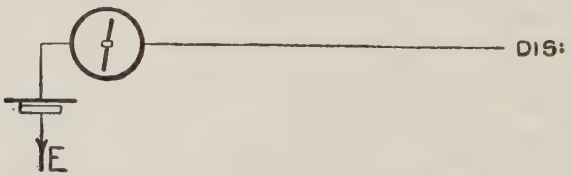

Fig. 611. Connections for Observation of Electrification Phenomenon

that the deflection produced continuously falls, thus indicating that the insulation steadily improves under the prolonged application of the battery. This phenomenon is usually, if not invariably, termed "electrification," but "absorption" or "dielectric polarization" would more accurately describe the effect. It is practically certain that the true insulation resistance does not improve and that the minute leakage current passing through the gutta-percha is constant. When the E.M.F. is first applied to the cable there is a heavy rush of current of short duration to charge it, and it seems probable that there is some sort of yielding or soaking in of the charge and that this alone is responsible for the increase of the deflection above that due to the true leakage current through the dielectric. If the battery is removed and the earthed galvanometer connected to the cable a steadily diminishing current is observed, thus indicating the exudation of this extra charge. Another explanation lies in a possible polarization effect in the dielectric.

Precisely the same effect is observed with condensers, the phenomenon being more marked with those having paraffined paper, than with mica insulation.

This effect is greater at low temperatures, but varies not only with the nature of the dielectric but with quality of material, being smaller in the best class of gutta-percha than in inferior grades. Kempe instances an experiment in which the insulation reading fell from 240 to 75 divisions in 90 min. at 32° F., whilst at 75° F., with the same specimen, the deflection fell to but 173 in the same length of time. With india-rubber the deflection falls much more rapidly, but with a far smaller difference between the maximum and minimum readings. With paper cables the fall is still less.

In all measurements of the insulation resistance of covered wires the reading is taken after a prescribed number of "minutes' electrification," or, in other words, after the testing battery has been applied for that length of time. The phenomenon is quite independent of the value of the E.M.F and of the direction of the current, but in repeating a set of measurements care must be taken that the whole of the electricity absorbed is discharged before attempting to do so. With long lengths of cable a considerable time must be allowed, and the cable meanwhile should be connected to earth.

One other point which should be remarked is that, with a perfect core, the deflection falls in a regular and steady manner, and that any irregularity is presumptive evidence of a defect in the insulation. In addition to the readings, it should always be noted whether the electrification is steady or irregular.

With comparatively short lengths of paper-core cable the phenomenon is very small, and the reading taken after one minute's electrification represents very approximately the true insulation.

The Grouping of the Wires in a Paper-core Cable for Insulation Tests during Construction. The insulation of a paper-core cable ranges between 5,000 to 50,000 megohms per mile. In order to obtain readable deflections upon lengths of from 100 to 400 yards with ordinary measuring instruments, and also to reduce the number of tests to be made, the various conductors are grouped. It is essential that the insulation between each wire and every other wire of the cable with which it is physically possible for it to be in contact shall be proved. Therefore, no wire may be tested in the same group as its companion wire of a twin (or wires if a quadruple twin) cable, either wires of the pair on

either side of it in the same layer, or any wire in either the layer directly above or below it.

Taking the case of the 74-wire cable, illustrated in Fig. 612, the following groups may be formed—

A — 39, 43, 47, 51, 55, 59, 63, 67, 71, 3, 7, 11.
B — 40, 44, 48, 52, 56, 60, 64, 68, 72, 4, 8, 12.
C — 41, 45, 49, 53, 57, 61, 65, 69, 73, 5, 9, 13.
D — 42, 46, 50, 54, 58, 62, 66, 70, 74, 6, 10, 14.
E — 15, 19, 23, 27, 31, 35, 1.
F — 16, 20, 24, 28, 32, 36, 2.
G — 17, 21, 25, 29, 33, 37.
H — 18, 22, 26, 30, 34, 38.

Each group may be tested provided all the other groups are, during the test, put to earth, and therefore instead of 74 tests, but eight are needed. With a larger cable containing, say, 600 wires, the reduction in the number of tests is still more remarkable. It will be seen that the principle consists in grouping together only those wires between which it is physically impossible for a contact to occur. If group A gave an insulation resistance of 800 megohms in a length of 220 yd., the per mileage insulation resistance of the whole group would be 100 meghoms, and the average insulation of each wire 1200 meghoms per mile.

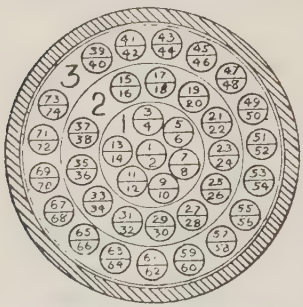

Fig. 612. Arrangement of 37-pair Paper-core Cable

From the example which has been given, and the statement of the underlying principle, it should be possible for the reader to work out the arrangement for any other type of cable. The tests are made with a high range megger (*vide* page 165); the method of carrying out tests during the jointing of successive lengths of cable is reverted to in Chapter XXIII.

PART V—TESTS FOR THE POSITION OF A FAULT AND RESISTANCE OF EARTH CONNECTION

Varley Loop Test. The exact position of an earth fault may be found by means of the Varley loop test

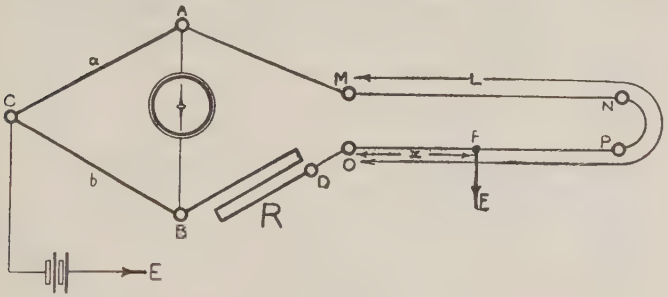

Fig. 613. Principle of the Varley Loop Test for the Position of an Earth Fault

when a perfect wire is available for the test. The resistance of the looped wires is measured in the ordinary way, and the connections are then altered to those shown in Figs. 613 and 614. In the former figure the

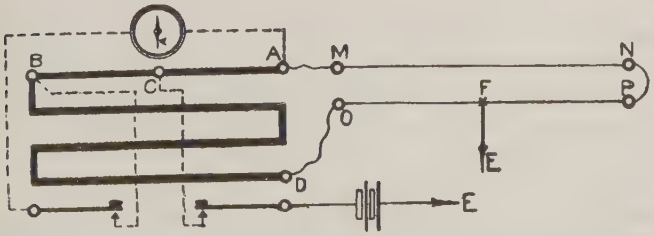

Fig. 614. Connections of Bridge for the Varley Test

principle of the test is indicated. It consists in throwing the rheostat arm into the external circuit and, by earthing the battery, connecting it to the point at which the fault exists. When a balance is obtained the product

of CA and $(BD + OF)$ is equal to the product of CB and $MNPF$. Assuming that $CA = CB$, then the resistance (x) of OF is obtained

$$x = \frac{L - R}{2}$$

where L is the resistance of the loop obtained by the first test and R is the resistance unplugged in BD to obtain a balance.

For example, let $L = 800$ and $R = 400$, then $x = \frac{800 - 400}{2}$ $= 200^{\omega}$, which is the resistance of the line up to the point at which the fault exists.

Where a and b are unequal $a(R + x) = b\ (L - x)$ whence

$$x = \frac{bL - aR}{a + b}$$

It will be observed that the resistance of the fault does not enter into the calculation at all, its only effect being to reduce the difference of potential applied between C and F.

The result of the test gives the resistance of the faulty wire between the testing office and the point at which the fault occurs, and, with the aid of the records of conductor resistance tests, the distance of the fault in miles from the testing office may readily be obtained. In the case of underground circuits the position may be obtained with very considerable accuracy since, owing to the constancy of the temperatures, the resistances of the wires do not vary. Consideration will show that this test as well as the contact test may be carried out with a bridge megger.

The test is a very accurate one when the resistance of the fault is low and the insulation is high. If the fault is a slight one and approximates to the insulation of the rest of the circuit the results obtained are valueless. The whole principle lies in the assumption that

there is one definite fault upon an otherwise perfectly insulated pair of wires.

The position of an earth fault upon one of the wires in a lead-covered cable may be localized by this method, but as the resistances of the sections tested are usually low, the ratio arms are made unequal, and care is taken to observe the resistance of the leads employed.

Murray Loop Test. The Murray loop test may be used in precisely the same circumstances and, under

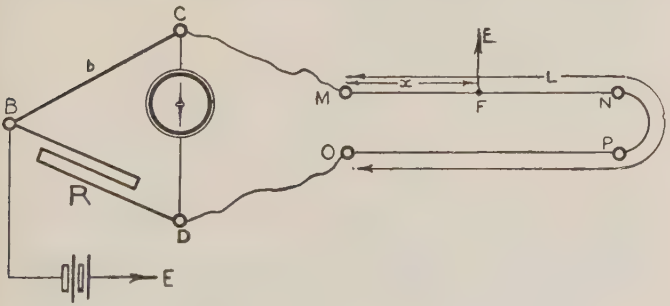

Fig. 615. Principle of the Murray Loop Test for the Position of an Earth Fault

some conditions, is to be preferred. The arrangement is illustrated in Figs. 615 and 616, from which it will be seen that the four arms of the bridge are formed by BC, BD, MF, and $FNPO$. When a balance is obtained $BC \times OPNF = BD \times MF$, i.e.

$$b(L - x) = Rx$$

whence

$$x = \frac{bL}{R + b}$$

where x = resistance of MF

$b = BC$

$R = BD$

L = resistance of the loop $MNPO$ obtained as in the Varley test.

As an example, let the resistance of the loop $= 100\omega$ $b = 100\omega$, and $R = 536\omega$; then $x = \frac{100 \times 100}{536 + 100} = 15{\cdot}7\omega$ approx.

Similar remarks as regards high resistance faults

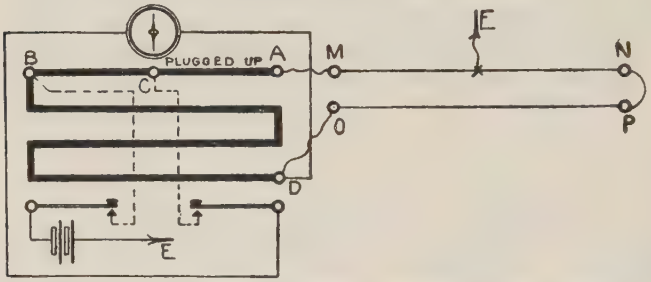

Fig. 616. Connections of the Bridge for the Murray Test

upon circuits having a low insulation resistance apply to this as to the Varley test.

Tests for the Position of a Contact. The position of a contact may be obtained as indicated in Fig. 617

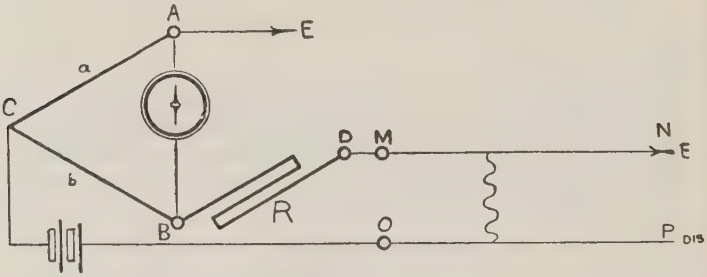

Fig. 617. Varley Test for the Position of a Contact Fault

(compare with Fig. 613), but where possible it is preferable to avoid the use of earth by employing a third wire. The Murray test may be applied to this case quite readily; the principle should now be sufficiently apparent.

*Precision Testing.** The necessity for the early detection and location of faults in main underground cables has, in recent years, led the Post Office Engineering Department to develop a comparatively elaborate technique; unfortunately, considerations of space prevent the subject from being dealt with in the present work, and therefore it must suffice to say that partial or total disconnections, as well as contact and earth faults of very high resistance, can now be localized with a remarkable degree of accuracy by tests made from both ends of the cable.

Pomeroy's Method of Testing Earths. It is frequently necessary to obtain the resistance of an earth

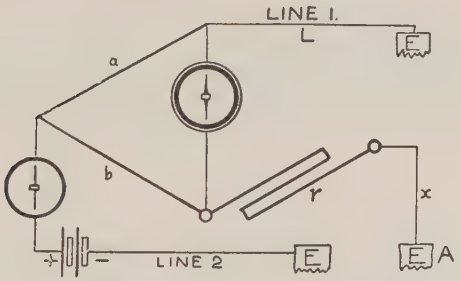

Fig. 618. Pomeroy's Test for the Resistance of an Earth; First Reading

connection, and, by making the two tests shown in Figs. 618 and 619. This may be accomplished with a fair amount of accuracy. Two lines connected to two independent earths are required for the tests and are joined up as shown. It is necessary that the value of the current passing at the earth plate should be approximately equal in both cases, and the battery power required for the second test should therefore be increased accordingly. This may best be judged by inserting a detector in series with the battery as indicated. The battery connections are reversed in the

* Paper No. 98, *I.P.O.E.E.*, "Maintenance Precision Testing of Main Trunk Cables," by B. Lister, South Lancashire Centre, 8th January, 1923; and Paper No. 104, *I.P.O.E.E.*, "Cable Testing," by E. S. Ritter, 17th January, 1923.

second test, so that the direction of the current from the plate A may be the same in both tests (L includes the resistance of the earth upon line 1).

1st test. $a(r + x) = bL$

2nd test. $a\,R = b\,(L + x)$

whence $$x = \frac{a(R - r)}{a + b}$$

or when the proportionals a and b are equal—

$$x = \frac{R - r}{2}$$

that is half the difference between the two resistances required to produce a balance.

Post Office Test of Earth. Where more than one earth plate is required for a large telegraph office or

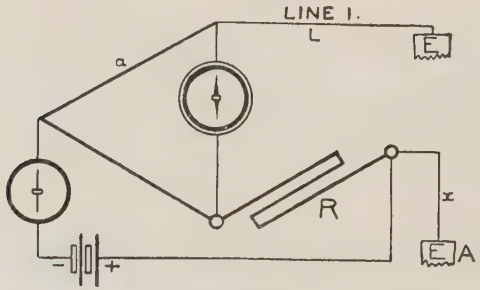

Fig. 619. Pomeroy's Earth Test: Second Reading

telephone exchange, and bridge tests are unreliable owing to earth currents, simultaneous readings of (i) the current flowing and (ii) the difference of potential between the two earth connections A and B under test are made. A battery of secondary cells 12^{v} to 16^{v} and an ammeter and switch are connected with low resistance leads between the two earth plates, the PD being observed by a voltmeter also connected between the earth plates. The mean of the readings E/C obtained with current in each direction is noted.

Similar tests are made between A and a third earth C, which may be to a water main and between B and C.

Hence, $R_A = \frac{R_{AB} + R_{AC} - R_{BC}}{2}$

PART VI—THE MAKING GOOD OF FAULTY CIRCUITS, SPECIAL ARRANGEMENTS, AND EARTH CURRENTS

Symbols used for Lines and Apparatus upon Plans. In order to represent the various classes of apparatus in use upon the circuits, the symbols shown at the base of Fig. 620 are employed on circuit plans to denote Post Office apparatus; rented apparatus is shown in outline symbols, and in the case of apparatus not owned by the Post Office the symbols are of dotted outline. The lines themselves are indicated by coloured line, as under—

Upon Maps—

Open lines:

Post Office maintenance	Green line
Railway company's maintenance	Red line

Covered lines:

Post Office maintenance	Blue line
Railway company's maintenance	Blue dotted line

The "Making Good" of Faulty Circuits. As previously stated, it is frequently possible to "make good" a defective long circuit, by crossing the faulty section with that of a shorter circuit without seriously affecting the working of the latter. Such a case is illustrated in Fig. 620, where the lines between B and C have been crossed so as to make A-$Q1$ good by throwing the fault on to the A-$D2$ circuit. Crosses are made at the test boxes at B and C (see Fig. 566).

One good circuit may frequently be formed from two defective ones by the insertion of suitable crosses. Such a case is shown in Fig. 621, where No. 1 wire has been made good with the B-C length of No. 2. There is some advantage in throwing both faults on to No. 2,

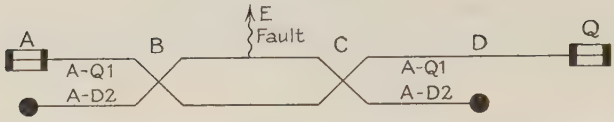

Creed Stop and Start
Wheatstone. Automatic
Receiver
Transmitter
Repeater
Morse Inker
Hughes
Teleprinter
Sounder
Double Plate Sounder or Bright's Bell
Single Needle (Acoustic)
Alphabetic (with Bell)
" Recorder S
Concentrator Switch

Permanently on Switch — on Switch for Night Service

Quadruplex
" Forked
" Split
" "A" side relayed DCS or DCSX
Loop and Plus Circuits
Baudot (insert number of arms) 4
Diplex
Duplex Sounder (C.B. System)
Polarized Sounder
Murray Multiplex M
Western Electric WE
Telephone (Telegraph Circuit)

A Duplex set is shown by adding + to the symbol thus:-

The letters W, R, or T should be added to the Quadruplex symbol when full Wheatstone, Receiver, or Transmitter is employed.

FIG. 620. MAKING GOOD A FAULTY CIRCUIT, ALSO SYMBOLS USED TO REPRESENT VARIOUS FORMS OF APPARATUS

and putting the wire through, since in this way the faults may be kept under observation.

As an example of a case which may arise in practice, suppose that a London-Belfast wire, relayed at Preston and passing through Carlisle, is faulty between Stafford

Fig. 621. Making One Good from two Faulty Circuits

and Preston, whilst a London-Glasgow wire (going via Leeds) is faulty between Carlisle and Glasgow. The Belfast circuit would be made good by a cross at Carlisle, and Leeds would be asked to introduce a repeater. Both faulty sections would thus be thrown

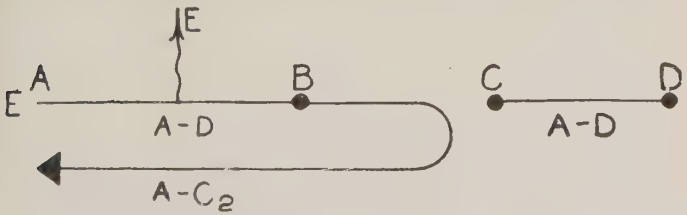

Fig. 622. Making Good a Faulty Circuit

on to the Glasgow wire, which would be kept under observation.

In Fig. 622 an example is given of a case in which the circuit serving *A*, *B*, *C* and *D* is faulty between *A* and *B*. It is assumed that *C* is an office where testing facilities are provided, and that a wire A-C_2 is available for crossing purposes. By terminating the *CD* section at *C* and forming *A*-*B* circuit as indicated all the offices are provided for, but re-transmission at *C* is rendered necessary.

The *A*-*D*3 news wire serving *B*, *C* and *D* is shown faulty between *B* and *C* (Fig. 623), but has been made

good with *A-D2*, which, however, does not pass through *B* and *C*. The only change that requires comment is that the apparatus at *A* requires to be made intermediate, the *U* and *D* terminals being joined to *A-D2* and *A-D3* respectively. If secondary cell working is in vogue at *A* a special set would be used, and the short line joined to *A-D3*, the set being reversed with the peg-switch.

The same result could be obtained by forking the circuits at *A*, but the method indicated is to be preferred when an intermediate or special set is available.

The Formation of Special Circuits. It is, of course, quite impracticable to provide each office with suffi-

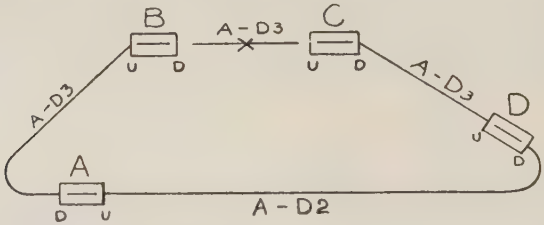

Fig. 623. Making Good a Faulty Circuit

cient circuits to deal with every emergency which may arise. There is, however, a number of reserve wires which may be used for special purposes, such as race meetings, speeches, cricket and football matches, etc., and, by suitably manipulating the various circuits, almost any emergency may be provided for. In forming these circuits the guiding principles are to produce the minimum amount of disturbance to the ordinary traffic arrangements, and to use open wires upon all long circuits. The work demands a knowledge of the routes of the various wires, but this is a part of the education of every testing officer. Although, if the record of the testing sections of each wire (see page 960) is consulted, this knowledge is scarcely essential.

It frequently happens that only one wire passes

through an office where special work is to be dealt with, and that this particular wire cannot possibly be given up. In such a case a wire can usually be found to make good the circuit required. For instance, *A*-*Q*1 passing through *B*, *C*, and *D* can be made available by crossing it with *A*-*D*1 at *A* and *D*. The number of wires may be doubled by terminating both sides of a through wire and doubling it back at the nearest testing point where a wire is available for the purpose. The guiding principles having been stated, local illustrations may readily be supplied by the reader.

It is often necessary to fork circuits so that items may be signalled to two or more offices, and in case the circuits forked are of unequal resistance, resistance may be added at the test box as shown in Fig. 566. On switch spring test boards the necessary connections are made with the aid of the grouping springs. The two forked offices are reversed to each other, and where this is of consequence a forked repeater must be introduced at the forking office.

The battery power requisite to work the circuits is found as described in Chapter II, but it may be convenient to summarize a few useful points.

I. The resistance per mile of an iron wire in ohms = 5328 ÷ weight per mile.

II. The resistance per mile of a copper wire in ohms = 878·73 ÷ weight per mile.

III. (*a*) Where the secondary cells are used, the E.M.F. required is the nearest value in excess of that obtained by multiplying the required current in amperes by the *total* resistance of the circuit (the resistance of one lamp resistance or metal-cased resistance coil, as the case may be, must be added).

(*b*) Where Leclanché batteries are used the number of cells required may be found by dividing the resistance of the circuit by 71 if 14 mA and by 48 if 20 mA required.

The term " resistance of the circuit " in III (*a*) and

(*b*) includes the resistances of the line and apparatus, but not the internal resistance of the battery, which is taken account of in the rules given.

EARTH CURRENTS

Two similar metallic plates immersed in two different electrolytes, separated by a porous partition, will form a voltaic couple, and therefore generate a current. There is no doubt that a slight current is produced by the two earth plates at the ends of a telegraph circuit, but it is of so minute a character that its effect upon the circuit may be ignored. There are also stray currents which are produced by leakage from the uninsulated return conductor (the bonded rails) of electric tramway systems. Since the difference of potential between any two points upon the system is limited to 7 volts under the Ministry of Transport regulations, but little trouble is experienced on this account.

It is found that different parts of the earth are frequently at different potentials, and that consequently "earth currents," as they are termed, flow over the circuits between the various points. In the case of very long submarine cables these currents are of sufficient magnitude to make direct working quite impracticable. For this, and other important reasons, condensers are inserted at either end of the circuit, thus preventing the passage of a steady current through the cable. Long land lines and short submarine cables are normally unaffected by earth currents and provision against such is unnecessary.

Generally speaking, lines running N.E. and S.W. are most frequently affected whilst those running N.W. and S.E. are seldom disturbed. A very severe magnetic storm occurred on 1st November, 1903, and it was accompanied by unusually large earth currents. In England, the circuits were affected from 7·0 a.m. to 8·0 p.m., and for some hours the service was completely disorganized. Earth currents up to 60 mA were observed, whilst the direction and value varied from time to time. A similar state of affairs occurred in France, and Paris

was unable to communicate with the greater number of French towns, and was also cut off from communication with America, Spain, Portugal, Italy, Algeria, Tunis, and many other places. Communication was re-established on the French lines at 4·40 p.m., but was interrupted at about 5·30 for a short time. Working on the London-Paris telegraph cable was also disorganized, but the Post Office submarine cable to Germany was less affected, although there was considerable trouble on the land lines serving it. From New York it was reported that a bright aurora was visible on the date in question—as was also the case in some parts of these islands and that earth current disturbances were felt in all directions, in some instances causing a total cessation of telegraph business. According to one New York correspondent a voltage of 675 was observed.

The long submarine cables were less affected than the land lines, and those upon which condensers and siphon-recorders are employed were hardly disturbed at all. Where Morse working was used, very considerable difficulty was occasioned.

Remedial Measures. The remedies against earth currents consist in the use of a metallic circuit, or the insertion of condensers. The former remedy is, of course, a complete one so far as the disturbances are concerned, but it reduces the number of circuits by half.

Metallic circuit working can be arranged between two offices worked with individual batteries by removing the earth connections at each end and substituting the line to be used as return. This doubles the resistance of the line and increased power may be necessary. Where secondary cell working is employed, the return line is connected to the relay at each end of a double current simplex circuit and a switch interposed in the connection between each relay and earth. The switch is turned to the earth side when sending, and thus the earthed battery sends out a current, along the line through the distant apparatus, and back along the return line to the earth connection, formed by the switch to the earth of the sending battery. In the case of duplex or quadruplex circuits, the rheostats are joined to the return wire and switches provided, to earth the return wire at the sending end when

signalling. On repeaters, a relaying sounder may be placed in series with each automatic switch, so that the earth connection required when sending may be made automatically.*

The second remedy (the insertion of a condenser in the line) is illustrated in Fig. 625. Both galvanometers, the relay at the sending end, and the key at the receiving end, have been omitted in order to simplify the diagram. The relay must be set neutral, since a momentary current flows only when the position of the key is

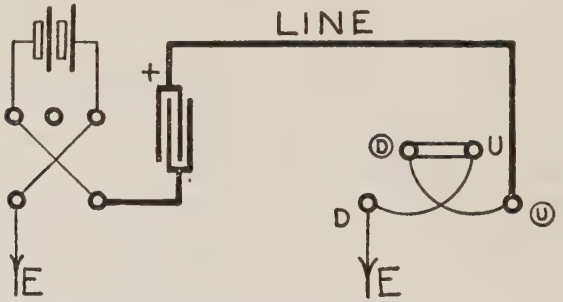

Fig. 624. Working Through a Condenser so as to Eliminate Earth Currents

changed. As, however, the condenser prevents the passage of a continuous current, no effect is produced either by a steady, or by a slowly varying earth current.

For many years it has been common practice to insert condensers in the lines at relay stations during the prevalence of earth currents, and no difficulty is ordinarily experienced. In slight cases it is frequently only necessary to raise the resistance in the rheostat of the shunted condenser upon Wheatstone circuits. It may perhaps be noted that a bridge duplex circuit would be less affected than one worked differentially, on account of the relatively high resistance and smaller

* *Vide Connections of Telegraphic Apparatus and Circuits, G.P.O.* plate 25A.

portion of the received current which flows through the relay.

On simplex double current sounder circuits a condenser of about 10 m.f. is inserted in the receiving circuit between the relay and the key. On circuits worked from secondary cells, duplex, and on all quadruplex circuits provided with condensers, the switches are turned to simplex, the rheostat disconnected and the full capacity of the condenser inserted, but on individual battery duplex circuits the switch must be turned to duplex in order to bring in the condenser. Wheatstone simplex circuits are worked by disconnecting the reading condenser rheostat.

Between large offices where secondary cell working is in use, metallic circuit working is readily arranged by using special intermediate sets at each end. The second wire is connected to the intermediate return at each end. This method is preferable to alterations to the connections of the sets at the tables, but is only adopted when the insertion of a condenser fails to meet the case.

PART VII—TRACING INSTRUMENT FAULTS

The commonest fault which occurs on apparatus is a disconnection produced by terminals not being tightly screwed up, by dirty or other defective contacts, or broken wires. Earth faults are not so frequent nor are contacts, but it is a cardinal principle that the apparatus should always be tested before proceeding to make tests of the line. This is easily accomplished from the instrument side of the test-box.

The effect of an earth fault on a line is to increase the current sent out and diminish the current received. A contact causes the signals sent on one circuit to be received on the circuit with which it is in contact.

In tracing instrument faults, much time is saved by obtaining as many facts as possible as to the conditions of working in which the defect operates, or does not operate, and thus to reduce the area of the examination. For example, the single current sounder set (Fig. 141) may be divided into main, sending, receiving, and local circuits. The main circuit is that common to both sending and receiving, viz. from the

centre of the key through the galvanometer to line or earth, as the case may be, and also *U*-circle of the relay to line or earth. The sending circuit is from *U*-circle, through the battery and front contact point. The receiving circuit is through the back stop and relay to *U*-circle. The local circuit comprises the sounder, local battery and *TM* contacts.

As an example of the deduction of the position of a fault, let the symptoms be that the call cannot be stopped. The reception of signals proves the main circuit at both ends, the receiving circuit at the receiving end, and the sending circuit at the sending end. This leaves the sending circuit and distant receiving circuit. If depression of the key cuts the circuit the fault is in the sending circuit. If not, the fault is in the distant receiving circuit, i.e. in the circuit through the back stop of the key and the relay. If it is noticed that, upon holding down the key, a current is sent out when the distant station obviously has his key at rest, the fault is either short-circuit of the relay or possibly the local battery circuit is defective, and the movement of the galvanometer needle has not been noticed.

Key faults in the double current set shown in Fig. 146, are comparatively rare since all the permanent connections are made by means of brass straps beneath the base. One of the contacts between the divided lever and the springs occasionally becomes dirty, or bent, or, in the adjustable contact type, one of the screws may need adjustment, with the result that the key sends out only one current. Faults in the switch are comparatively rare.

If, after having called for some time, it is noticed (from the galvanometer) that the distant station is endeavouring to stop the call, the fault will lie in the caller's receiving circuit. If upon the proving test explained on page 272 it is found that the relay is unaffected by the caller's key, the fault is in the key switch. Occasionally the connecting wires break inside their covering and thus cause intermittent faults.

Two defects of apparently opposite character may be produced by defective regulation. " Sticky " dashes and missed dots may be caused by insufficient bias upon the relay and too much tension upon the spring of the sounder. They may also be caused by the armature of the sounder being allowed to approach the cores too closely, with the result that the marks stick. Instead of this being put right, the spacing bias is increased and, sticky dashes still occur whilst the dots are missed.

Here it may be pointed out that the disconnection of one

coil of a differentially wound instrument may enable it to work when its coils are in parallel.

In duplex sets a further division of the circuits may be made to include those parts used only in duplex working and those common to both duplex and simplex. In the single current duplex (Fig. 151) it should be remembered that the battery resistance coil *r* shunts the *UD* coil of the relay at simplex, and that inability to work duplex whilst simplex working is possible could be produced by the disconnection of the *UD* coil.

In the case of the double current duplex shown in Fig. 164, consideration will show that a disconnected line causes the sender's marks to be received reversed upon the home apparatus, and this still happens when the rheostat resistance is increased.

An earth upon the line reduces the normal deflection upon the home galvanometer, and when the switches at both ends are turned to simplex, the deflection when sending greatly exceeds that when receiving. The resistance in the rheostat required to balance is also greatly reduced.

Disconnection of the condenser is revealed by split marks, and the fact that alteration of the plugs produces no effect. A short circuit in the condenser renders the rheostat inoperative, and the sender's marks are received reversed.

A rather puzzling fault which occasionally occurs is due to one of the shunts across the galvanometer coils becoming disconnected. The result is that when a balance has been obtained by the galvanometer the working signals are split up when both stations are simultaneously working. This is immediately detected if the signals are rectified by altering the resistance in the rheostat. The signals are then correctly received, but the home key causes the galvanometer to deflect.

A similar fault is occasionally produced by the insulation of the galvanometer or the relay coils giving way, and so short-circuiting a number of turns of wire.

A heavy loss upon a circuit frequently precludes duplex but not simplex working. When a wire is earthy, its resistance, and consequently the resistance required in the rheostat to balance it, is greatly decreased. The strength of the current in both line and compensation coils is therefore correspondingly increased, but these two effects balance. If, now, three-fourths of the current from the distant station flows to earth one-fourth only will be available at the distant end. This fraction of the current acts solely upon one coil of the relay, whereas in simplex working the current would pass through both coils of the relay in series. The pull upon the tongue of the relay

would be quite twice as strong in the latter as in the former case.

Let the set shown in Fig. 164 work duplex satisfactorily, but when turned to simplex working is stopped. The fact that duplex working is possible proves that the battery, galvanometer, relay, and rheostat are perfect, and that the connections to line and earth are in order. If the stoppage is inability to send or receive, connection is not made between the bottom and right-hand terminal through the strap to the upper terminal of the duplex switch when turned to simplex. If, however, currents are sent out but not received, the fault lies in the circuit from the lower right-hand terminal of the key, through the key and duplex switch connections to the top terminal.

Consider now the case in which simplex, but not duplex, working is satisfactory. The fault, excluding lack of differentiality in the galvanometer or relay, can only be in the connection made by the upper half of the duplex switch or in that made by the lower half and thence to the split of the relay. In the latter case, the key has no effect on the galvanometer when the rheostat resistance is varied.

The cases discussed have for their object the demonstration of the principle by which the defective portion of the apparatus may be located by the symptoms of the fault, and the reader is advised to sketch the full connections of various sets of apparatus and then to consider the various effects which will be produced by faults in various positions. For example, it will be observed that since the current sent out by a single needle commutator passes through the back stop of the key which is at rest, a disconnection in the receiving circuit cannot exist at these points if both keys send out current.

In the case of quadruplex working it is necessary to have a ratio of one to three between the *A* and *B* currents and equal powers should be used at the two ends.

If the *B* key has no effect upon the strength of the current received at the distant end, it is obvious that the *B* battery is short-circuited. If disconnected, the *A* marks received at the distant end would be destroyed and the balance upset, whenever the *B* key was in the faulty position.

A fault in the *A* key causing it to send out only one current would break up the distant *B* marks, but would not affect anything else, as it is quite possible that the distant *A* side would be re-regulated to work with but one current, without the cause for the alteration being discovered. At the office where the defect exists, the signals would be received perfectly upon both the *A* and *B* sides. Such faults should, however, be

discovered when observing the ratios of the received currents upon the differential galvanometer.

A disconnection in the line or compensation coils of the relays or galvanometer should readily be located, as in duplex working.

A contact between the two coils of the relays or galvanometer is evidenced by impossibility of balancing. If in the *B* relay, it will be possible to balance in the ordinary way, but the *B* relay will not then be differential. If the contact is near the *D* and *U*-circle ends of the relay it will be equivalent to cutting the latter out altogether. A contact at any other point will have similar results, viz. that when the circuit is balanced by the galvanometer, the keys still affect the apparatus.

A short-circuit in the coils of any of the relays or galvanometer produces a like result, but here it is possible to clear the marks on both *A* and *B* relays by disregarding the galvanometer, and then balancing by observing the effect upon the working signals. If either relay has a short circuit, the faulty relay is affected by the keys, when both the galvanometer and the perfect relay are balanced.

Faults in the local circuits are self-evident, and the adjustments have already been dealt with.

In observing the received currents both the distant keys should be proved in each position and the distant station should similarly observe the home apparatus. In the majority of cases the trouble lies in the adjustment of the *B* side, and faults such as those described are comparatively rare.

Wheatstone circuits have their special faults, of which defective regulation of the transmitter is probably the most frequent; but the principles given in this chapter may be applied to locate defects, and the apparatus special to automatic working, with its connections, should form a further division in splitting up the circuit into its component parts.

Faults in the sending circuit are easy to locate, the most frequent causes being broken wires, terminals not screwed up tightly, dirty key contacts or blown fuses. In secondary cell-worked offices, a portable voltmeter is used for testing the power, and, with its aid, a few moments only need be occupied in tracing faults due to the power supply.

Repeater, multiplex, and start-stop apparatus faults are dealt with on similar lines. The adjustments are described under the relative headings.

CHAPTER XXIII

UNDERGROUND LINES

The question as to whether circuits should be provided by aerial line or underground cable is now solely a question of economics. Where the number of wires required is more than sixteen, it is generally cheaper to use underground. For a small number of wires the capital cost of the conduit and cables is greater, but their maintenance cost is but a fraction of that of the equivalent open line. If the number of wires needed is great, the annual charges (interest on capital, maintenance, and depreciation) per wire are much less than for open wires. Apart from this, the use of beds of open wires in the centre of large towns is not a practical proposition.

While it is true that the electrostatic capacity of an underground wire is several times greater than that of an open wire, and consequently the speed of working is less, modern methods have reduced the difficulties to negligible dimensions. It may be said that there is no telegraph circuit within the Kingdom which cannot now be worked so as to provide its full traffic capacity. The days of special telegraph cables, with comparatively heavy conductors, have passed, and it seems probable that many such cables will in future be withdrawn to provide duct space for telephone cables with several times as many small gauge wires. The main line telegraphs of the future will all be worked on pairs of wires in telephone cables, and, indeed, this is precisely what exists in Germany to-day, since its telegraph system disappeared during the Great War.

There is no economic alternative to the use of open lines for minor circuits, and for extension circuits to remote villages, but here again the expansion of the

telephone service usually gives the alternative of underground for some portion of the distance.

All the great centres of population are now linked together by both telegraph and telephone cables, but as has been said, the former are likely gradually to disappear.

Underground lines are less vulnerable than open wires, which may be broken down by falling trees, by the force of an exceptional gale, an abnormal deposition of ice, or by the impact of skidding motor vehicles on the poles. Again, the insulators are often broken in large numbers by stone throwing, with a resulting loss of insulation. From each of these sources of trouble, the underground line is free, but it has very real dangers of its own. The most serious of these is electrolytic damage (*q.v.*) to the cable by stray currents —usually from tramway trolley systems and electric railways. Next in importance is the damage by heat when electric light and power mains develop a burn-out due to a fault in proximity to the cable route. Other causes of interruption consist in accidental damage during road reconstruction and repair or by subsidence of the ground in which the conduits lie, as, for example, in mining districts, or where old and forgotten sewers collapse, or where the earth is washed away by the breakage of water mains or perhaps by an underground stream. Then, too, leakage of gas into conduits and chambers sometimes produces an explosive mixture, the ignition of which is often somewhat of a mystery. But, with the exception of electrolytic damage, all these causes put together are not of very serious moment.

Faults on underground circuits are very few in number as compared with those on aerial circuits, but they take longer to locate and are costly to remove.

DESIGN AND LAY-OUT

The design, lay-out, and extension of underground routes require close and specialized study. The

problems which arise are ultimately questions of economics and are solved on the basis of meeting the immediate and ultimate requirements in the most economical manner.

On the one hand, waste takes place if the future requirements are too liberally provided for, thus involving extra annual charges (interest on capital and depreciation on a sinking fund basis to replace the capital at the end of the physical life of the plant) and equally if, as the result of insufficient provision, it is necessary to duplicate or add to the plant in a comparatively short period. For example, the cost of laying a three-way duct in a town is considerable owing to the trenching and reinstatement costs, and if the ground has again to be opened and another three-way duct provided in the same section in five or six years, the cost of the six conduits is very much greater than that of a six-way duct laid at the start. In the same way the withdrawal of a cable and its substitution by a larger one involves considerable wastage.

The design and lay-out of the plant necessary to meet the requirements necessitates accurate knowledge of the existing plant and conditions, and involves a very large amount of detail work. It is not practicable to discuss the problems which arise, but in general terms it may be said that ultimately they resolve themselves into matters of economics. The decision as to which of several courses shall be adopted is taken on the basis of the present value of the annual charges in each case. The annual charge for any particular portion of plant of a particular type is made up of the interest on the capital cost, plus such an amount contributed annually as will repay the capital cost at the end of the physical life of the plant, the latter being the period of time which the plant is estimated to last before having to be renewed on account of decay or obsolescence. These calculations are facilitated by the use of the following interest tables.

INTEREST TABLES (5 per cent)

Years	One Pound		One Pound per annum	
	$(1+r)^N$ Amount	$\frac{1}{(1+r)^N}$ Present Value	$\frac{(1+r)^N-1}{r}$ Amount	$\frac{(1+r)^N-1}{r(1+r)^N}$ Present Value
1	1·05000	·95238	1·00000	·95238
5	1·27628	·78353	5·52563	4·32948
10	1·62889	·61391	12·57789	7·72173
15	2·07893	·48102	21·57856	10·37966
20	2·65330	·37689	33·06595	12·46221
30	4·32194	·23138	66·43885	15·37245
50	11·46740	·08720	209·34800	18·25592
	A	*B*	*C*	*D*

C is the cumulative yearly total of *A*.

D ,, ,, ,, ,, *B*.

$B = \frac{1}{A}$, $C = AD = \frac{D}{B}$, $D = \frac{C}{A} = BC$.

r = rate of interest, e.g. 5 per cent = ·05.

N = number of years.

The cost of maintenance of each type of plant must also be taken into account, and on this score it is often cheaper to employ more costly plant to obtain a reduction in maintenance costs. For example, it may be economical to lay a protected cable for only two or three circuits if the open route is in an exposed position where breakdowns, due to ice accumulations or other causes, occur frequently. In this case the higher capital cost of the underground is justified by the saving in the maintenance cost of special repairs which would be incurred during each winter if the cheaper aerial line was erected.

Selection of Route. Generally, the shortest possible route is chosen for main trunk cables, and the opportunity is taken to lay extra conduits in those sections where it is probable that local exchange circuits will in the future be required.

In estimating the cost of a new route, the type of paving is a vital factor where small routes are concerned, but in the centre of large cities the position and depth of existing sewers, gas and water mains, hydraulic supply and electricity supply and distribution mains determine the depth and position in which the conduits must be laid.

Then, too, bridges, canals, rivers and underground passages may lie in the track of the route. In these cases the plant may have to be laid in tunnels at a depth of 20 or 30 feet below the surface. In general, all such work is carried out under contract by ordinary civil engineering contractors under Post Office direction and to Post Office specifications. This work is of a highly specialized character and it can only be said that the essential principles involved are to ensure the efficient and economical construction of the duct line, to provide security to other users of the road, and to ensure that the work shall be carried out with adequate precautions to prevent weakening of the road such as to cause ultimate subsidence. Then, too, any movement of the road may affect adjoining buildings and special precautions are necessary when the work is in proximity to old or defective walls or buildings with shallow foundations. In the case of tunnels, the roof and sides of the tunnel are supported by timbering, and as the ducts are laid, the working space between the top of the concrete over the ducts and the roof is filled with hard core, consisting of old bricks solidly packed.

In the case of less congested roads, where the ducts are laid in an open cut trench, it is often necessary to timber the sides of the trench and to support this timbering by struts across the trench so as to prevent any possibility of collapse of the sides. Naturally, special care is necessary in proximity to tram rails.

For minor routes the cost of reinstatement is the determining factor.

Fig. 625. Trench Excavation

Showing method of supporting existing services during the construction of a 70-way duct route in Manchester

Fig. 626. A Deep Excavation

Showing the timbering of the trench and support of cable manholes' pipes, etc. (120-way duct route in Manchester)

Careful scrutiny of Figs. 625–628 will provide illustrations of the points mentioned.

The type of paving is a vital factor in the cost of the route, and the reinstatement charges made by the various road authorities in respect of each type of paving are first ascertained. The reinstatement charges for the footway are invariably less than for the carriageway, and in the latter case a cover of 24 in. is required instead of 14 in. (single duct) or 18 in. (multiple-way duct) for footways.

The obstructions likely to be met with may be ascertained by observation and by direct inquiry. In the first category come bridges, projecting cellars, electric light mains (from the position of the boxes), sewers, etc. Inquiries made from the various gas, water, and other supply authorities usually suffice for a fair estimation of the obstructions.

Where the choice of route lies between busy and comparatively unfrequented thoroughfares, the latter are chosen on account of the superior facilities which they offer for the execution of the work and its subsequent maintenance. At the same time, tortuous routes and frequent road crossings should be avoided.

The pipes should, where possible, be laid in straight lines between consecutive boxes, in preference to following the line of the kerb. Electric light mains should be given as wide a berth as possible in order to minimize the chance of a fault leading to the formation of an arc with Post Office pipes.

Economy is effected by carefully considering the laying out of the stores, general organization of the work and by the use of motor transport.

Thrust Boring. The Mangnall-Irving machine consists essentially of a high-pressure hydraulic pump operating a ram which forces a pilot rod through the solid earth between pits sunk at either side of the section to be thrust bored. As each 3 ft. length of rod is pushed into the earth, another is attached, and so

FIG 627. A TRENCH
Showing timbering of sides (30-way duct route)

FIG. 628 A TUNNEL
Showing the timbering during the construction of an 80-way duct route at a depth of 18 ft. in Manchester. (The man is putting in the hard core packing)

on, until the two pits are connected. An enlarging head is then pushed through by the machine and fibre duct of the type shown in Fig. 632, or 3 ft. lengths of steel pipe are finally inserted through the boring. This method is particularly useful and economical where a single duct is required across a road with concrete foundation and carrying tram rails, across a railway, or beneath a canal. The apparatus used by the Post Office has a hand-operated force pump, but machines with a motor drive have been designed.

In the descriptions which follow, the methods and plans described are necessarily those used for telephone purposes.

Protected Cable. There are situations where a protected cable laid directly in the ground can be used economically, as, for example, along the grass margin of a country lane or on private property where the risk of interference or disturbance is slight. If there is any probability of additional cables being required, S.A. duct is provided. Protected cable is made in 1, 2, 4, 7, 10, 15, and 25 pair sizes, with $6\frac{1}{2}$ lb. conductors. It is of the ordinary construction, but the lead sheath is covered with a wrapping of hessian or similar tape, and bituminous compound.

Troughing. Creosoted wood troughing, made in two halves, is $2\frac{1}{2}$ in. square with a $1\frac{1}{2}$ in. circular hole for the cable; it is used when the ultimate requirements will not exceed fifty pairs (Fig. 629). Joints between successive top and bottom sections are staggered so that a top and a bottom joint never come near to each other. The lower half is jointed by nailing on a reversed piece of troughing, and the sections are held together by wire clips.

Troughing is laid at shallow depths in narrow trenches, and is therefore the cheapest conduit which can be provided. The cable is laid with the troughing, and not by drawing in. Troughing is laid at a depth of 6 in. under tarred footways, stone, asphalte, and such

pavings, at 8 in. under gravel, cinders, grass, etc., at 12 in. under carriageway pavings across footways, and at 24 in. under carriageways.

Earthenware Ducts. The standard form of construction, where from one to nine conduits are required,

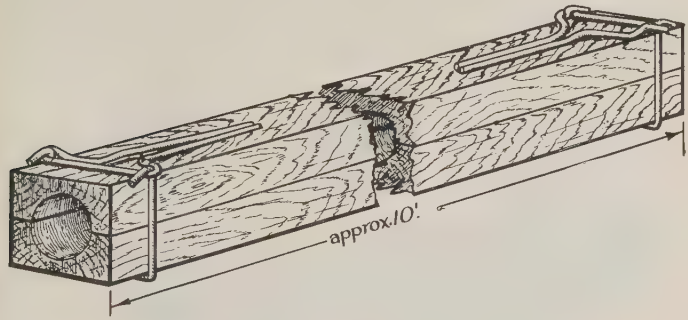

FIG. 629. WOOD TROUGHING

consists in the use of earthenware ducts. Single-way S.A. (self-aligning) ducts (Fig. 630) are made in two sizes, each having a run of 2 ft., one having a 3 in. and the other a 4 in. internal diameter. The sockets and spigots are lined with Stanford's composition, and

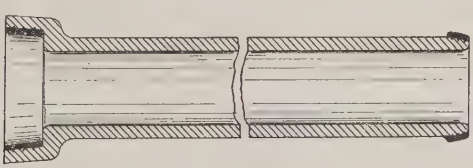

FIG. 630. SELF-ALIGNING DUCT

joints are made by coating both the spigot and the socket with hot compound composed of tar, whiting, pitch, etc., and pressing the spigot home. The alignment of the internal bores will then be perfect, hence the term self-aligning (S.A.). A duct terminating No. 11, having a diameter of 4 in., is used to enable the

lead sleeve used in cable-jointing to be slipped up the pipe where the space for cable-jointing is restricted.

Various types of multiple-way duct are shown in Fig. 631.

The two-way, three-way, four-way, six-way, and nine-way (multiple-way) ducts are $3\frac{1}{4}$ in. in diameter and 2 ft. and 2 ft. 6 in. in length. These are laid at a depth of 18 in. in footways and 24 in. in roadways to the

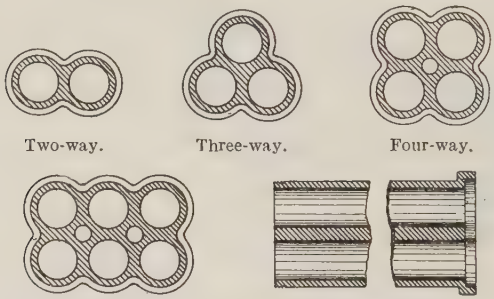

FIG. 631. VARIOUS TYPES OF MULTIPLE-WAY DUCT

top of the ducts. Bends 1 ft. 6 in. in length are used where required.

In order to provide for joints between successive lengths of cable, suitable couplings are provided for cast-iron pipes, single-way, and two-way and three-way (multiple-way) ducts.

In laying these ducts all abrupt curves in the route must be avoided, and when obstacles, e.g. gas and electric power mains, are met which necessitate alterations of level, the changes should be made gradually. " S " bends, where the route curves first in one direction and then in the other, should not occur, since serious difficulty will arise when pulling in cables. The trench is recessed under each socket, so that the length of the duct may rest on the solid earth; this is only possible if such provision is made for the sockets.

As each length is laid the alignment is proved by pulling through a mandrel. The mouth of the duct is closed by a wooden plug on completion of each section to prevent the ingress of stones and dirt from the trench.

Fibre Duct. A form of conduit much cheaper than cast-iron pipes is used by many municipal authorities and has been employed by the Post Office to a limited extent. It is formed of wood pulp, built up on a mandrel from a solution in exceedingly fine films, and is impregnated with bitumen and preservative or antiseptic substances to provide insulating and watertight properties and to destroy any organisms in the pulp which may tend either to shorten its life or to have any deleterious effect on the lead covering of cables.

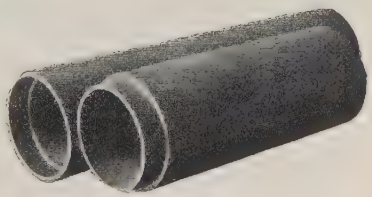

FIG. 632. FIBRE CONDUIT

The tube is extremely light, and is made in 5-ft. lengths; the lengths are jointed by smearing the reduced end of the duct to be laid with compound and thrusting it into the recessed end of the duct already laid (Fig. 632).

Iron Pipes. Iron pipes were at one time used exclusively for conduits, but on the score of expense they are now used only where special strength is necessary, as, for example, beneath railway level crossings, or where the pipes have to be laid at very shallow depths owing to obstructions.

The pipes are cast from soft pig-iron of good quality, and, after being thoroughly cleaned to remove all sand, grit, or metallic excrescences, are heated, and then dipped into Dr. Angus Smith's composition.*

* Coal tar, 1 cwt.; tallow, 7 lb.; quicklime, slaked, 10 lb.; pine resin, 4 lb.; coal naphtha, sufficient to thin the composition to a degree suitable for proper coating.

This composition produces a hard glaze upon the surfaces of the pipes, which tends to protect them against rusting.

The specification for each size of pipe states the minimum internal diameter, and also the minimum weight of the pipe, which fixes the thickness of the metal. The pipes are tested with a circular gauging disc having a diameter one-sixteenth of an inch less than the internal diameter of the pipes. The other important points to be observed are that the pipes shall be straight, smooth, and the thickness of the metal quite uniform.

The four sizes of the pipe used by the Post Office are distinguished by quoting the internal diameters. The 2 in. pipes are made in lengths which give a " lay " of 6 ft., whilst the

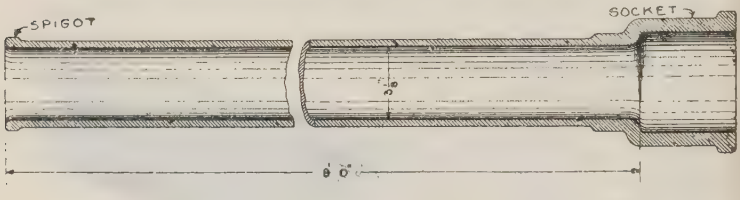

FIG. 633. A 3 IN. CAST-IRON PIPE

3 in., $3\frac{1}{4}$ in., and 4 in. pipes have a lay of 9 ft. per pipe—for example, 150 2 in. pipes or 100 3 in. pipes are required to provide 300 yd. of conduit.

A 3 in. pipe is illustrated in Fig. 633, from which it will be observed that the spigot end is rounded off so as to fit into the socket of the preceding pipe. In order to joint the pipes the spigot end of one is placed within the socket of a second, after which a suitable quantity (about 2 in. deep) of spun yarn is lightly wrapped round the pipe, and driven home with a caulking iron. In order to fill the annular space between the spigot and socket ends of the pipes with lead, a roll of plastic clay is laid around the edge of the socket so as to leave an opening at the top. Through this, molten lead is poured, and after cooling for about one minute, the clay is removed. (A special clip to perform the function of the clay collar is sometimes used.) The lead is well punned with the aid of a " lead set " of suitable dimensions, so producing an air and watertight joint of con-

siderable strength (Fig. 634). If the yarn is omitted, the molten lead runs into the pipe, which it effectually blocks, but this should be discovered when testing the pipes during laying. Another variation consists in the use of lead wool, which is put in cold and then rammed tight with a caulking iron.

Usually the pipes are jointed in twos or threes at the side of the trench, and, for this purpose, they are laid upon wooden pipe blocks which raise them about 6 in. from the ground. As each length is laid, the mouth of

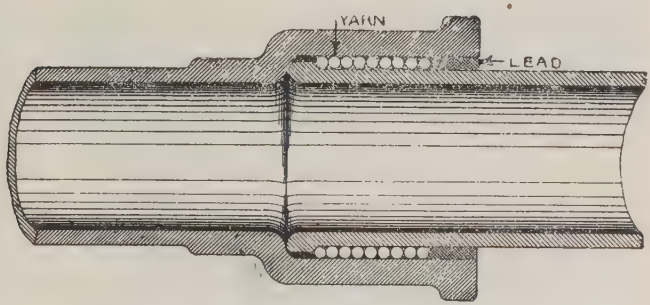

FIG. 634. JOINT BETWEEN TWO LENGTHS OF PIPE

the pipe is closed by a wooden plug in order to prevent the ingress of stones and dirt from the trench.

When two or more pipes are laid in a single trench, the pipe joints should be so spaced that they do not occur at the same points along the route ; this is economical in the space occupied, and also tends towards greater rigidity.

Slight curves in the route may be negotiated by giving the pipes a slight set at the joints, but whenever the curve is of a pronounced character curved pipes or bends (Fig. 635) are used. A number of bends of varying lengths and curvature, some provided with sockets at both ends and some with spigot and socket ends, have been designed to meet these cases. The $\frac{1}{16}$ bends with a lay of 6 ft. are probably used more often

than any of the others, although the $\frac{1}{4}$ and $\frac{1}{32}$ bends are also extensively employed. The terms $\frac{1}{4}$, $\frac{1}{16}$, $\frac{1}{32}$, denote the fraction of the total circumference of the circle which the bends represent. For instance, the

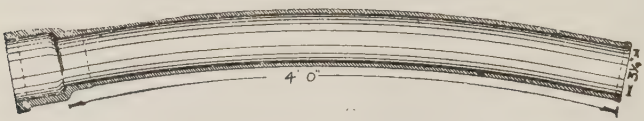

FIG. 635. A 4 FT. SOLID $\frac{1}{16}$ BEND FOR 3 IN. PIPES

$\frac{1}{16}$ 6 ft. bend has the curvature of $\frac{1}{16}$ of a circle 14 ft. in radius.

Steel Pipes. Steel pipes (Fig. 636) are lighter than cast-iron pipes, and although they cost more than the latter they have properties which render them very useful in meeting contingencies and obstacles. They are made of mild steel, covered with a spiral wrapping

FIG. 636. STEEL PIPE

of prepared jute, and can be bent locally. The sockets being small, these pipes are particularly useful for bridge crossing, either built into the bridge or supported on the outside of the bridge, and in positions where space is restricted.

Steel pipes are supplied in lengths varying from 14 ft. to 30 ft.

The connection between the steel pipes and multiple-way duct is made with the aid of a special double-socket duct, one end of which is dimensioned to receive the steel pipes, and the other to join up the ducts.

Duct Routes. When more than nine conduits are needed along a congested route, such as is met with in

large cities, earthenware ducts are generally employed. The duct is 18 in. long, with a $3\frac{1}{4}$ in. or $3\frac{1}{2}$ in. circular bore and an octagonal exterior (Fig. 637). The method of laying these ducts is as follows—

A trench of suitable dimensions is formed and a 2 in. layer of concrete laid down (Fig. 639). Upon this, one,

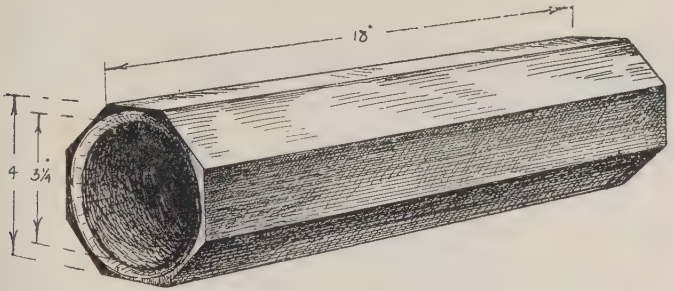

Fig. 637. An Earthenware Duct

two, or more T-irons, jointed by fishplates, are placed, and covered by a 4-in. layer of concrete. This reinforced foundation is allowed to set for 24 hours, after which a thin layer of cement mortar or " compo " is formed, and the first or lowest row of ducts bedded upon it. The sides and top are lined by a solid concrete

Fig. 638. Train of Mandrels in the Ducts during the Process of Laying

wall of from 4 in. to 7 in. in thickness, according to the type of paving and the number of ducts to be laid.

A 4 in. strip of ozokerit tape is wrapped round the end of each duct before it is laid, the tape overlapping the end by 2 in. The end of the following duct is placed within the overlap. This tape serves to prevent the cement mortar used as described below, from entering the ducts.

The lowest tier of ducts having been laid, cement mortar is spread over the top and packed solidly into the interstices. The second and subsequent tiers of

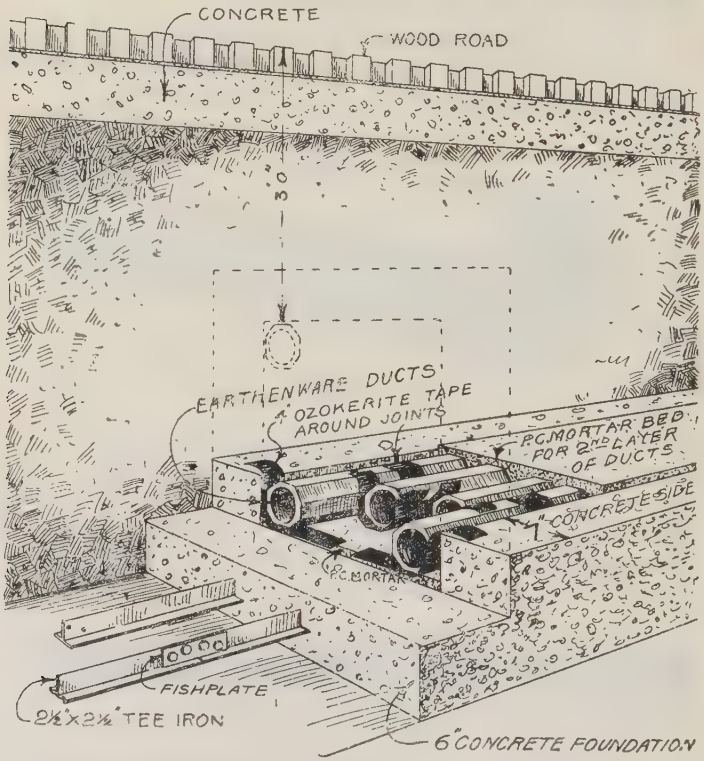

Fig. 639. Formation and Method of Constructing an Octagonal Duct Route

ducts are then placed in position and treated in the same way, the process being continued until the complete " nest " of conduits has been built up.

A train of mandrels is placed in each duct line and is pulled forward as each joint is made (Fig. 638). This ensures perfect alignment by preventing any length of

duct from sinking or falling after being laid. When the manhole is reached, a mandrel 5 ft. long is employed to preclude the possibility of disturbance to the nearer joints whilst the chamber is being constructed. Finally, the ducts are tested by drawing a mandrel through each

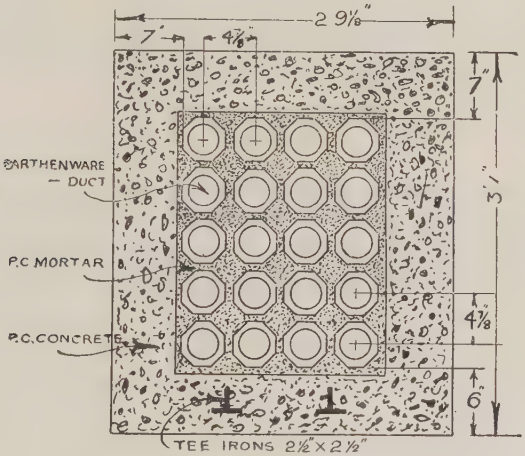

Fig. 640. Section of Duct Route

duct in the whole section and are cleaned out by a circular brush which follows it.

Consideration will show that this form of construction results in a compact block of conduits (Fig. 640) of considerable rigidity, the T-iron serving to prevent any possibility of vertical displacement. The joints between the successive ducts are not made at the same points along the route, they are "broken" as indicated in Fig. 639, a 24 in. duct being employed to effect this result.

The arrangement of the group of ducts may, if necessary, be varied to clear obstacles *en route*, whereas that of a group of multiple-way ducts is much less flexible.

Couplings and Markers. Joints between successive cable lengths are made in couplings, boxes, or manholes.

When it is necessary for any purpose to cut the pipes, the gap thus made is filled by using a split coupling pipe, i.e. a pipe made in two halves which are secured together by pairs of cotters and pins.

Fig. 641. Cast-iron Coupling for Two-way Earthenware Duct

A variety of couplings are used, some to enclose an ordinary cable joint or joints, while others have, in addition, special branches to which lateral pipe routes can be connected and which provide for distribution

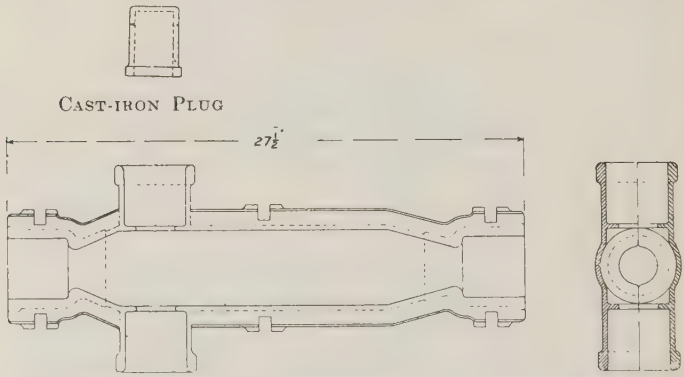

Cast-iron Plug

Fig. 642. Flanged Branch Coupling for Lateral Pipes on a 2 in. Cast-iron Pipe

cables being led off a main cable. Some typical couplings are shown in Figs. 641, 642, and 643.

As it may be many years before it is necessary to disturb the ground there is less disadvantage in this procedure, i.e. the use of couplings, than would, at first sight, be imagined. The first cost of the system is, of

course, far less than that in which jointing chambers are employed.

Two branches are provided on the branch flanged coupling, and where one or both of these are not

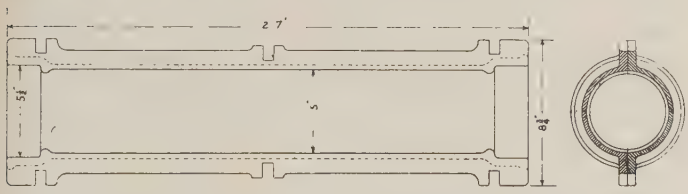

Fig. 643. Cast-iron Coupling for use with 4 in. Multiple-way Ducts

required at the time the route is laid, plugs are inserted in order to prevent earth entering.

The positions at which joints have been made are, of course, carefully recorded, but. in addition, cast-iron "markers" are placed above the joints flush with the paving, or, where no paving exists, a marking post (Fig. 644) stating the horizontal distance from the sign to the joint is placed at the side of the road.

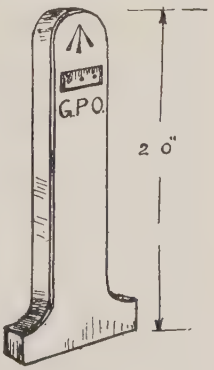

Fig. 644. Marking Post

The present practice is to confine the use of couplings to those cases in which but one or two pipes, or two-way or three-way ducts have to be laid either under cheaply paved footways or in special circumstances, beneath the roadway, as, for example, in the case of a country road in which there is no defined footway upon either side. In such cases the construction of roadway manholes would be exceedingly costly, whilst the ordinary joint boxes and their covers are not designed to withstand the stresses produced by heavy wheeled traffic.

It should be stated that the use of couplings entails the making of a hole of fairly large dimensions for the pulling in and subsequent jointing of the cables.

On two and three-way main underground duct routes where a cast-iron coupling (No. 15 or 16) with a drain pipe extension was formerly employed at jointing points, buried concrete boxes are now general. For a three-way duct route the box has internal dimensions 5 ft. 1 in. long by 15 in. square. The sides and top are removable, and bricks placed in the centre of the box serve to support the cable joints.

Joint Boxes. Where there is a paved footway and access to the cables may be required for distribution, jointing changes, faults, or other purposes, joint boxes are provided in accordance with the details shown in the table below—

TYPES OF CHANNELS, JOINT BOX

Type	Length Inches	Breadth Inches	Conditions of Use
No. 1 (*Distribution*) .	15	9	Through joint on small cable or branch connection to small cable by parallel joint.
,, 2 (*Small*) . .	29	10	Distribution routes when No. 1 too small.
,, 3 (*Large*) . .	35	14	Two conduits on distribution route.
,, 4 (*Extra large*) .	36	18	Ditto, but important junction and main cable route for one or two conduits laid not deeper than 18 in.
,, 5 (*Single junction*) .	24	24	Distribution routes, street corners for one or two conduits at junction points.
,, 6 (*Double junction*) .	52	24	For three conduits. In place of No. 4 at a right angle in the route. When conduits deeper than 18 in. on main routes.

In order to reduce the size of the boxes needed for making joints in large cables, "terminating pipes" are frequently employed. A "3 to 4 in. terminating pipe" consists of a pipe 4 in. in diameter, but narrowed down at the end which is intended to be jointed to the socket of the ordinary 3 in. pipe. In this way the lead jointing sleeve may be pushed up the terminating pipe and thus allow of the reduction of the length of the jointing chamber to that actually occupied by the joint itself, but allowing, in addition, suitable room for working.

In the case of two, three, and four-way multiple ducts a 12 in. drain pipe, 2 ft. 6 in. in length, is jointed to the last duct entering the box or manhole for this purpose.

The general arrangements of a No. 4 box are shown in Fig. 645. The cast-iron frame is shaped to receive the lid which is also a cast-iron frame filled with a slab of artificial stone.

When the line of pipes is being laid, the requisite gaps are left at each box site, but care is taken that the ends of the pipes shall terminate with the spigot ends, which is readily effected by cutting the last pipe to the requisite length and making the last joint with the *cut* end.

A hole of suitable dimensions is prepared and the bottom lined with 3 in. of concrete upon which four, five, or more courses of bricks are built according to the requirements of the case. Upon the top of this the channel is placed and bricked up in the manner indicated in Fig. 646. It is necessary to adjust the depth of the box so that there are two courses of brickwork below the lower pipe.

The standard method of construction is by means of concrete.

The double-junction box (No. 6) is provided with two lids, each 2 ft. square, of the same type as that used on single-junction boxes. The centre of the box,

where the two lids meet, is provided with a removable crosspiece upon which the lids normally rest. Apart from this there is nothing which calls for comment in the five types of box not discussed in detail.

There is also a carriageway joint box with an oval cover, having internal dimensions, 3 ft. 2 in. long by

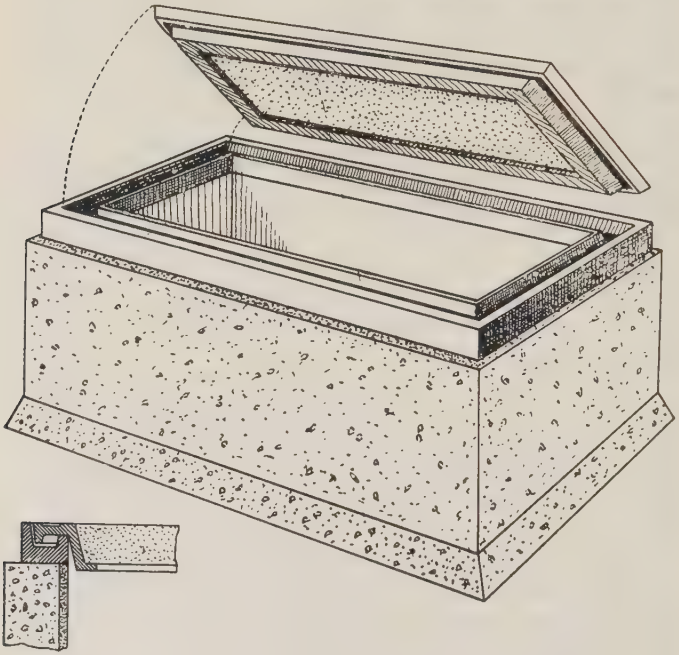

Fig. 645. An Extra Large Box (No. 4)

2 ft. 2 in. wide and 2 ft. 5 in. deep, which is used when possible in place of No. 1 carriageway manholes.

Buried Boxes. Buried boxes are sometimes constructed when the pipes are at considerable depth under inexpensive paving, where the construction of a manhole cannot be justified or where a lateral pipe joins the main distribution route at a different level, so that a

branch coupling cannot be used. The box is built of such dimensions as to include the pipes, and a $\frac{1}{2}$ in. boiler plate or 3 in. concrete slabs of suitable dimensions form the roof. The use of a box of considerable depth with a surface entrance is often inadmissible because the sides of the box would have to be broken away to give

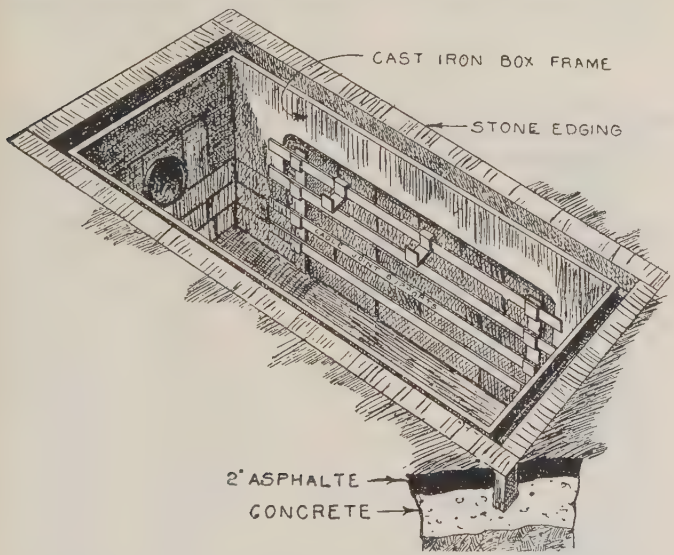

FIG. 646. VIEW OF INTERIOR OF JOINT BOX SHOWING THE SUPPORTS FOR CABLE JOINTS

This type of box body has given way to the channel form in which stone edging is not required.

the cable-jointer room to work. The special type of buried box used on two and three-way main duct routes was dealt with on page 1014.

Manholes. Generally, the construction of duct routes in footways is much cheaper than in carriageways owing to the less depth necessary, to the smaller reinstatement charges, and to the lighter manhole construction practicable in view of the smaller loads of pedestrian as compared with vehicular traffic.

The standard method of manhole construction is by means of reinforced concrete. There are cases where, owing to irregularity of shape due to obstructions, brickwork is more convenient, but a well constructed concrete manhole is cheaper by about 25 per cent, and is stronger than the corresponding brickwork manhole.

In a convenient position in every manhole, to facilitate the pumping out of water prior to jointing, a

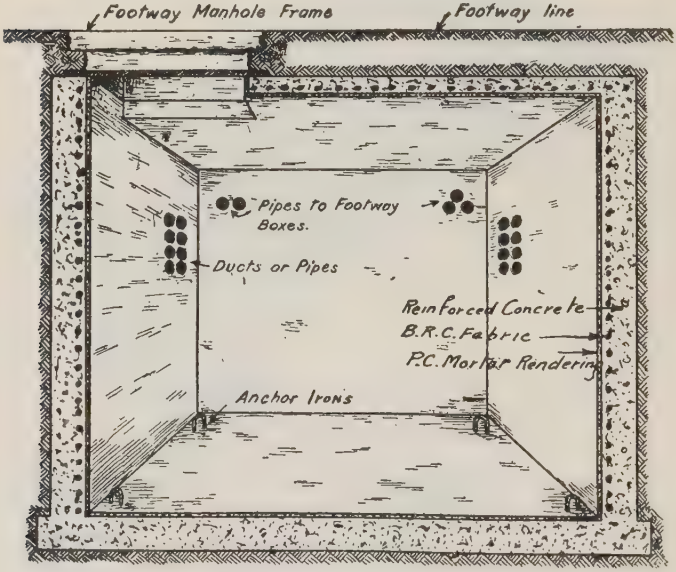

Fig. 647. Footway Manhole

sump-hole is formed with a 9 in. drain pipe, 2 ft. in length, the bottom of which is sealed with 6 in. of P.C. concrete and $1\frac{1}{2}$ in. of cement mortar. A cast-iron grating covers the top and rests in the socket. Manholes beneath the roadway must be capable of supporting the heaviest traffic, and are therefore of a heavier type. Often, the footways are largely taken up

by gas, water, electric light, tramway cables, and other services, and space for a large manhole is not available.

The smallest type of footway manhole is built with reinforced concrete walls upon a 6 in. concrete foundation, "rendered" with $\frac{3}{4}$ in. of cement-mortar. A double-junction pit channel covers two-thirds of the top, while a reinforced concrete roof covers the remaining third.

A larger type of footway manhole is illustrated in Fig. 647. The entrance is formed by means of a footway manhole frame and cover, the design of which closely resembles that of the single-junction pit channel previously described.

At each corner of the manhole ring-bolts or anchor irons are fixed to facilitate the operation of pulling the cable into the pipes. Galvanized iron steps are fixed into one of the end walls, as indicated in the figures. Iron cable bearers are provided to take the weight of the cables crossing the manhole. The entrance is whenever practicable, at the side of the manhole so

FOOTWAY MANHOLES

Size	Length	Breadth	Height	Conditions of Use
	ft. in.	ft. in.	ft. in.	
1	4 $3\frac{1}{2}$	3 0	3 0 or 4 0	Four conduits
2	4 $3\frac{1}{2}$	3 6	5 0	5 or 6 conduits
3	4 0	3 0	4 0	4 conduits
4	4 0	4 0	5 0	5 or 6 conduits
5	5 6	4 0	5 0	7 to 12 conduits
6	7 0	4 0	6 0	13 to 20 ,,
7	7 0	5 6	6 0	21 to 35 ,,
8	8 0	5 6	6 0	36 to 45 ,,
10	10 0	4 6	6 6	Special for an abnormal number of loading coil units
11	13 6	5 6	7 4	

Type F. Brickwork throughout.
Type FF. Brickwork walls with concrete roof.
Type RCF. Reinforced concrete throughout.

that there shall be no danger of the cables being damaged by workmen stepping upon them, as might readily happen were the entrance placed directly over the cables.

A lead earth plate 6 ft. by 1 ft., with a lead strip

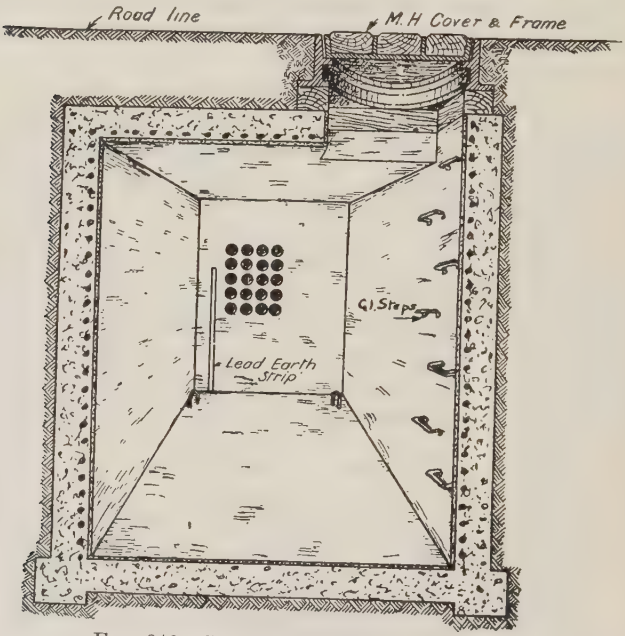

Fig. 648. Carriageway Manhole

attached, is laid beneath the floor of the manhole (*vide* electrolytic damage).

Roadway manholes are built in somewhat similar fashion, but the entrance consists of an iron frame and a cover fitted with wood blocks in the type of which an end view is given in Fig. 648. The reinforced concrete walls vary in thickness, those of roadway manholes being thicker than those for footway manholes. The cables are supported upon cable-bearers either

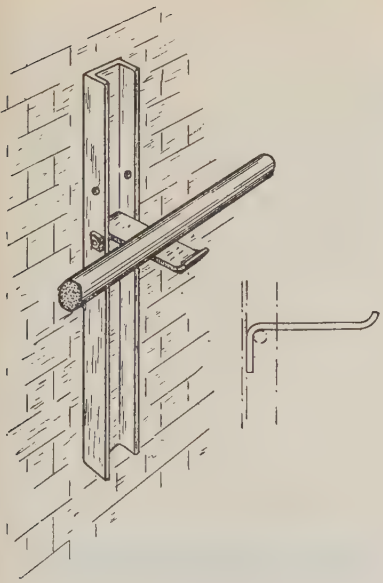

Fig. 649. Cable Bracket

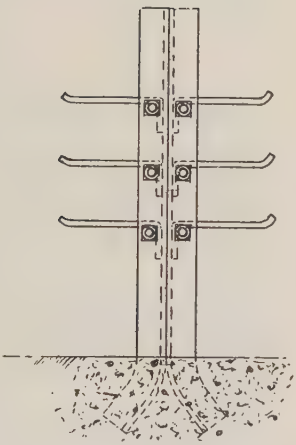

Fig. 650. Cable Bearer
(Two channel irons set back to back)

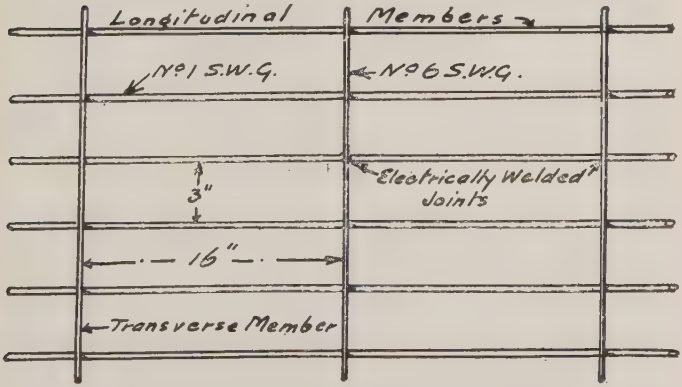

Fig. 651. B.R.C. Steel Wire Fabric
The material used for reinforcing the concrete manufactured by the British Reinforced Concrete Engineering Co.

bolted to the walls or fixed to the floor of the manhole, as shown in Figs. 649 and 650.

In joint boxes, supports fixed into the brickwork at the side of the box are frequently used to carry the joints (see Fig. 646).

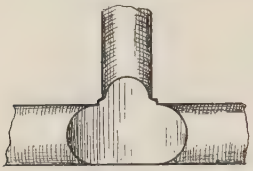

Fig. 652. Section Cut of Electrically Welded Joint of the B.R.C. Reinforcing Material

The material used for reinforcing the concrete roofs and walls is shown in Fig. 651. It is composed of longitudinal tensional members 3 in. apart, which are held in position by electrically welded lateral members of a smaller gauge, which also key the tensional members when in the concrete. Fig. 652 shows a section cut at a welding.

Fig. 653. Indented Bar Reinforcement

Indented bars of mild steel of the general form indicated in Fig. 653 are often used instead of the mesh previously described. They perhaps lend themselves more readily to variations

CARRIAGEWAY MANHOLES

Size	Length		Breadth		Height		Conditions of Use
	ft.	in.	ft.	in.	ft.	in.	
1	4	0	3	0	4	0	4 conduits
2	4	0	4	0	4	0	5 or 6 conduits
3	4	0	4	0	5	0	
4	5	6	4	0	5	6	7 to 12 conduits
5	5	6	5	0	5	6	13 to 20 ,,
6	7	0	4	0	6	0	
7	7	0	5	6	6	0	21 to 35 ,,
8	7	0	7	0	6	0	36 to 45 ,,
10	10	0	4	6	6	6	Special for abnormal number of loading coil units
11	13	6	5	6	7	4	

Type C. Brickwork throughout.
Type CF. Brickwork walls with concrete roof.
Type RCC. Reinforced concrete construction throughout.

in manhole shapes necessitated by obstructions, whereas the cutting of a mesh to meet special conditions is occasionally unsatisfactory and somewhat laborious.

In the case of manholes used for accommodating loading coils, the covers and frames are of a larger type than those used for the ordinary ones.

PAPER CORE CABLES

Lead covered cables having annealed copper conductors wrapped with paper and arranged either in twin (Figs. 654 and 655), multiple twin, or the new star quad formation are exclusively employed on underground routes.

Multiple twin cables with either 20 lb. or 40 lb. conductors are used for main trunk lines, and twin cables with $6\frac{1}{2}$ lb., 10 lb., 20 lb., or 40 lb. conductors for local junctions and telephone subscribers' circuits. Composite cables containing layers of two or more sizes of conductors are sometimes required to meet transmission requirements in local telephone areas, but the use of such cables is restricted as much as possible owing to the difficulties which arise when a damaged length has to be replaced at short notice, and to the fact that it is not easy to find use for a length recovered in consequence of unexpected development.

The number of pairs which can be provided in a cable capable of being drawn into a $3\frac{1}{4}$ in. conduit varies with the size of the conductors and their formation.

Size. Lb. per mile	$6\frac{1}{2}$	10	20	40	70
Diameter in mils	20	25·5	35·5	50	—
Res. per mile ohms	134·96	87·72	43·86	21·93	—
Pairs (twin)	1000	800	300	—	—
„ (M.T.)	—	—	—	160	104
„ (Star quad)	—	—	542	254	—

The largest cable so far produced capable of being drawn into a $3\frac{1}{4}$ in. duct has 1818 pairs of 4 lb. conductors in star quad formation.*

* *Electrical Review*, 10th May, 1929.

PAPER CORE CABLES

Weight of Conductor in lb. per mile	Diameter in mils		Maximum Resistance in ohms per mile at 60° F.*	Mean Capacity in mf. per mile (wire to wire)	Minimum Insulation Resistance of Cable in Factory, megohms per mile†
	Minimum	Maximum			
6½	19·5	20·5	134·96	·075	5,000
10	24·5	25·5	87·72	·075	5,000
20	35·0	36·0	43·86	·065	5,000
40	49·5	50·5	21·93	·063	5,000
70	65·5	66·5	12·53	·065	10,000

By twisting the wires in pairs the inductive effect (q.v.) of each wire is balanced by the opposite effect of its partner, whilst no effect can be produced upon the twisted circuit, owing to the two wires uniformly changing their positions with such frequency that the inductive effects in each are equal and balance. This assumes absolute uniformity and perfection in manufacture, but in practice a certain amount of inductive interference occurs between two neighbouring pairs of twisted wires of equal lay running together for a considerable distance. This induction is of a serious character when the pairs of wires are used for telephone circuits, but the sphere of disturbance due to each twisted pair is limited to the two, or in some cases three, pairs next to it upon either side. This defect has been remedied by varying the lay, i.e. the length taken for a complete twist. With 20 lb. conductors, the successive conductors in the outer layers have lays of

* The British Engineering Standards Association specifications for calculating the resistance of copper wire R for a weight per mile W for high conductivity copper wire are—

$$R = \frac{860}{W} \text{ for annealed, and } \frac{885{\cdot}8}{W} \text{ for hard-drawn, wire.}$$

† Multiple twin or star quad cables which are to be loaded and balanced are required to have a minimum insulation of 25,000 megohms per mile at the factory, the insulation of each wire being measured with all the other wires and sheathing earthed.

3, 4, 5, and 6 in. respectively, while with 100 lb. conductors the lays are 7, 8, 9, and 10 in.

Twin Cables. Small telephone distribution cables (one to fifteen pairs) are invariably of twin formation, and the various pairs are identified by the colour of the helical paper lapping, but there is no distinction between the A and B wires. The identification of the pairs by the colour of the paper avoids the necessity for numbering out.

Fig. 654. Twin Paper Core Cable

Cables with more than fifteen pairs are similarly formed, but identification of the pairs is effected by the use of a specially coloured wrapping for one pair in each layer which is used as the pilot pair. For example, on a 200 pair 20 lb. twin cable there are four pairs in the centre, with 10, 16, 22, 28, 34, 40 and 46 pairs in the first to the seventh layers respectively. The four pairs in the centre are orange, blue, white, and green. In the first layer, green, orange, blue, white; red, blue, white; red, blue, white. The lay of the orange and red pairs is 5 in., blue 6 in., white 7 in., and green 8 in. The pairs in the subsequent layer are arranged in similar sequence, and thus by counting from the orange pilot core in any layer, the particular pair sought is readily identified. This cable has a diameter of 2·2 in. The sheathing of all cables is of new British or Colonial pig lead applied at a temperature not exceeding 600° F., and must have a uniform thickness of 120 mils. It is tested by applying an internal air pressure of 75 lb. per square inch on completion of manufacture. The ends are sealed and the cable is immersed in water for twenty-four hours before the electrical tests for insulation are made—the minimum insulation required being 5,000 megohms per mile.

The general details given in the case of a 200 pair 20 lb. cable apply equally to other sizes. The thickness of the lead sheathing* varies with the diameter of the cable and ranges from 39 mils for a one pair cable and 65 mils for a ten or fifteen pair distribution cable, to 143 mils for a cable having a diameter of 2·88 in. The paper used is 2·5 mils thick, with a thick fibred texture free from metallic particles, and is applied helically.

Multiple Twin Cables. In these cables the paper insulated conductors are first twisted in pairs, and two pairs are then twisted together to form a two pair core. Hence, an efficient phantom circuit can be formed on each four wire core. Multiple twin cables are provided only for main trunk circuits. For junction or other relatively short circuits, the extra apparatus and the loss of the automatic signalling facilities on the physical circuits due to the interposition of transformers outweighs the value of the extra circuits obtained by superposing.

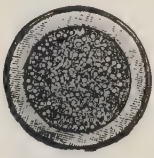

FIG. 655. SECTION OF A TWIN CABLE

The pairs are identified by the wrappings in a manner somewhat similar to that described for twin cables, viz., an orange pilot pair is included in each layer.

Paper of the same colour is used for covering the two conductors of a pair, distinction being made by wrapping one wire with red and the other with white string. Two pairs are twinned and covered with a distinctively coloured paper, either red, white, blue, or green. The variable lay principle has necessarily to be adopted and in the case of a 40 lb. cable, the lay of the pairs is 5, 6, 7, or 8 in., and of the twinned pairs, 10, 12, 14 and 16 in.

The arrangement of the 160 pair 40 lb. London-Manchester cable† is shown in Fig. 656.

* t (inch) = ·051 + ·038d, where d is the diameter of the completed core.

† *P.O.E.E. Journal*, Vol. XV, p. 154 *et seq.* "The New London–Manchester Cable," by J. E. Statters and W. V. Lonnon.

A cable was laid some time ago in which the string is omitted and the *A* wire distinguished by a black line running along the paper wrapping. Also the length of the lay of the pairs was increased and that of the

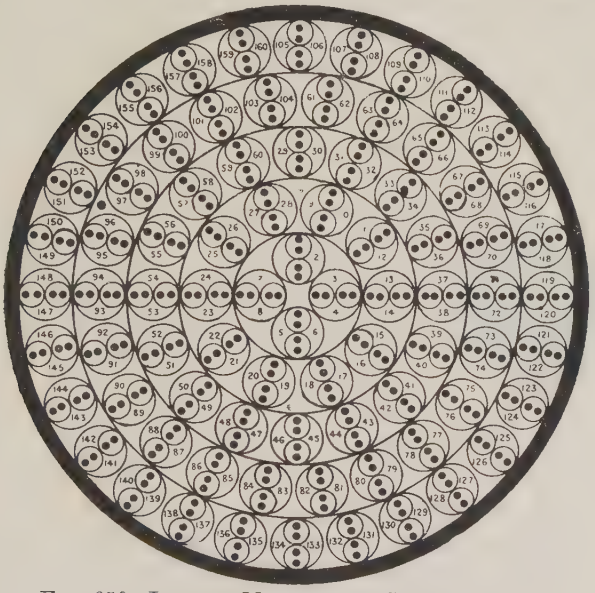

FIG. 656. LONDON–MANCHESTER CABLE (160 PAIR 40 LB. M.T.)

four wire core reduced. More uniform constants are claimed for it.

Star Quad Cable.* In the star quad, the four wires of each core are twisted together in one operation and so occupy the four corners of a square. This formation was adopted in the first London–Birmingham cable, but owing to the instability of the make-up due to the loosely wrapped pairs, there was very considerable

* " Air Space, Paper Core Telephone Cables of the Twin, Multiple Twin, and Quad Types," by A. Morris. *P.O.E.E. Journal*, Vol. XX, p. 193.

inductive interference between the circuits. In the new cable practically the whole of the insulation consists of paper and no attempt has been made to provide large air spaces. Stiffening of the paper tubes has resulted in the accurate and permanent centralization therein of the conductors, whilst a central string upon which the covered conductors are bedded is used to ensure symmetry of the cores. This extremely important feature of centralization of the conductors within the paper tubes may be secured either by the use of specially creased or corrugated surface paper wrappings, or by a spiral whipping of string directly next the conductor, over which the insulating paper is tightly wrapped. The cable is therefore extremely compact and uniform in its behaviour. For example, a 254 pair (127 quads) cable can be drawn into a $3\frac{1}{4}$ in. conduit, as compared with a 160 M.T. 40 lb. cable. This type of cable will supersede the M.T. type for trunk purposes.

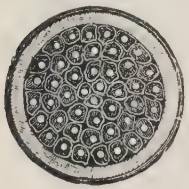

Fig. 657. Section of a Screened Conductor Cable

Obsolescent Cables. The quadruple pair cable consists of four pairs of wires laid together round a jute centre or core; the completed cable being formed of the required number of these quadruple pairs. The lay of the four pairs of wires in each set is varied as also is the lay of the quadrupled cores. It was superseded by the M.T. type.

Screened conductor cables are made up of 40 lb. copper conductors, each solidly lapped with three layers of paper, over which is laid a helical winding of copper tape 300 mils wide and 3 mils thick, with an overlap of 90 mils. The cable containing 40 conductors is made up of 1, 6, 12, and 21 cores in the centre first, second, and outer layers respectively.

The cable (Fig. 657) was lead-covered, and was used for high-speed single wire telegraph circuits. Screened conductors were sometimes included in telephone cables for telegraph purposes, but experience has shown that an ordinary twisted pair gives equally good results when one wire is used as the working circuit and the companion wire is earthed at each end of the cable.

Research has shown that by working telegraphs with small battery power (of the order of 24 to 40 volts) on twisted pairs, both telegraphs and telephones may be worked in the same cable without serious interference by the former with the latter.

Composite Cables. Cables have been used in which conductors of various gauges have been associated in various ways. For example, one cable consists of twenty-one pairs of 150 lb. and twenty-four pairs of 100 lb gauge. A 150 lb. pair forms the centre, and around it are four paper-wrapped cables, the interstices being filled with single, or as they are termed, "worming pairs." Each of the paper-wrapped cables consists

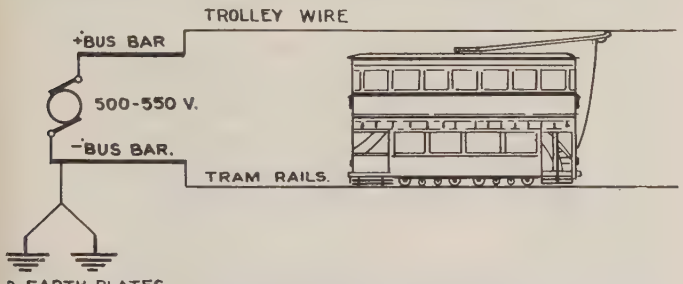

FIG. 658. TRAMWAY POWER SUPPLY

of four quadruple pair 150 lb. conductors with four twin 100 lb. conductors filling the space between the 150 lb. pairs—the latter having a large air space.

Other cables were formed having a core of multiple twin or quadruple pairs surrounded by screened conductors for telegraph circuits. For example, one such cable contains eight 150 lb. and fifty-six 100 lb. wires arranged in quadruple pairs together with thirty 100 lb. and seven 40 lb. screened conductors. The centre is formed by one 150 lb. quadruple pair core around which are placed seven 100 lb. quadruple pair cores, while the outside layer is formed by the thirty 100 lb. screened conductors, between which and the 100 lb. quadruple twin cores are the seven 40 lb. conductors.

Electrolytic Damage to Lead-covered Cables.* The most serious danger which menaces lead-covered cables

* "Corrosion of Lead-covered Cables by Electrolytic Action," by S. C. Bartholomew, I.P.O.E.E. paper No. 89, of 17th December, 1922, also "Electric Strays," by F. C. Raphael, *Electrical Review*, Vol. 93, p. 911, 14th December, 1923.

consists in the corrosion of the sheathing, but this has not so far proved to be a vital danger. It will be obvious that from the very design of the conduits and boxes it is impossible to keep the pipes quite free from water. The water which finds its way into the pipes frequently contains active chemical substances in solution which gradually destroy the sheathing. Since a cast-iron pipe and the lead sheathing with a certain amount of impure water form a voltaic couple, corrosion may arise from this source, but by far the most serious

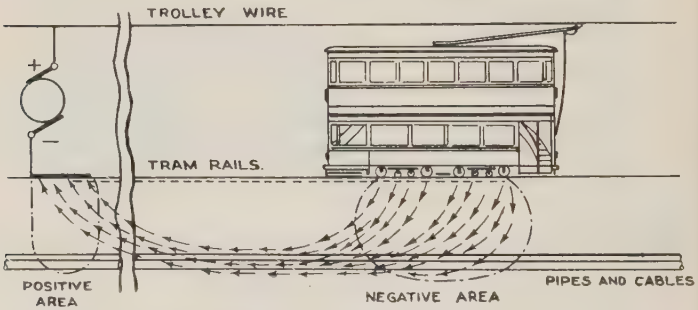

Fig. 659. Tramway Leakage Current—Positive and Negative Areas

trouble is produced by leakage currents from the uninsulated return circuits of electric tramways.

Indeed, the former may be considered, owing to its rarity, to be of little or no consequence.

In the case of electric tramways, the feed current to the trams is effected by means of an insulated overhead trolley wire and the tram rails are used as the return path. In order to maintain electrical continuity, the tram rails are connected together by bare heavy copper straps or bonds at every joint in the rails. Any complete or partial failure of this bonding will cause discontinuity, and the return current leaves the rails and spreads out into the surrounding earth, with the result that current concentrates in metal pipes and cables

nearby in its effort to find a low resistance track back to the generating station. At some point or other the current must leave this new-found or foreign track, and it is at these points where the flow of current is positive to earth and where the area is regarded as positive that corrosion occurs. The amount of corrosion depends on the current and the time during which it flows (see page 20).

A current of one ampere flowing for a year will eat away roughly 75 lb. of lead or 20 lb. of iron. As lead

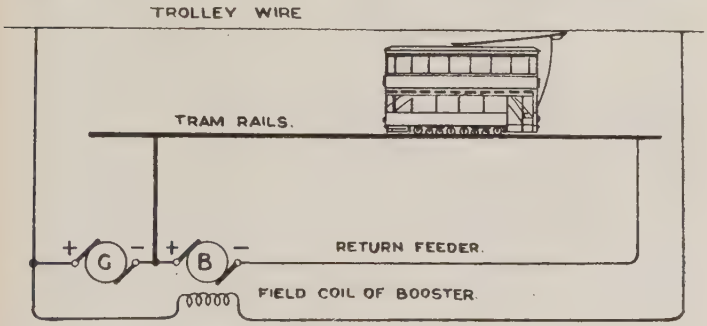

Fig. 660. Return Feeder and Negative Booster

forms the final protection of paper core cables, the damage caused by this corrosion or electrolytic action is a serious matter for the Post Office authorities, especially in the case of loaded and balanced cables. The inevitable interruptions to the public service are so serious that special staffs are continuously engaged in tracking down dangerous conditions and locating faults. When the source of the leakage current can be definitely established, the cost of making good the damage caused falls upon the authority concerned.

Many difficulties present themselves in the localization of these stray currents, especially in those areas

with many electrical undertakings. For example, in the case of a leakage current in an area where electric tramways exist, when all the known tramway currents are cut off, there often remains a certain amount of current which it may be claimed arises from some other source. In general, this current is a polarization current due to the action of the sheath as a secondary cell.

Electric tramways are in general use throughout the country. They are, however, subject to regulations of the Ministry of Transport, and these regulations should be rigidly observed. In effect, they demand that the undertaking shall provide a solid, dry track for the rails, efficiently bond the rails together, adopt any other measures for reducing the potential drop in the rails, and maintain efficiently the rail bonds and earth connections on the busbar. The regulations lay down that the current returning to the negative busbar via the earth plates shall not exceed 2 amperes per mile of single track, or 5 per cent of the total output of the station. Where any pipe or cable is negative to the tram rail, the difference of potential must not exceed $4{\cdot}5^{v}$ and $1{\cdot}5^{v}$ in the positive or danger area.

It may be mentioned that the measurement of potential differences does not settle the question as to the point of electrolytic damage, since the P.D. may be highest at a point where the resistance between the rail and the cable is very high, consequently the current may pass from the cable some considerable distance away. The value of the current flowing in the cable sheath is important, since the condition of high resistance between rail and cable may be modified during wet weather. The maximum drop of potential permissible along the tram rails is fixed at 7 volts, and it is important that this figure be not exceeded, since it limits the amount of current flowing through the rails, and hence the amount of stray or leakage current. The remedy in cases where the permissible drop is exceeded consists in supplementing the rail return by

a return feeder, and the introduction of a negative booster—a dynamo driven by a motor and having its armature and field joined in series with the negative return feeder. The pressure can be balanced so that the two ends of the negative feeding points are at practically equal pressure at all times.

In dealing with electrolytic damage cases, it is advisable first to prepare a comprehensive plan on an ordnance map of the tram routes, the feeders, the position of the generating station and sub-stations, and to indicate the position of all connecting points.

A detector No. 2 or No. 4 may be used for measuring the difference of potential between cables and the tram rails, or the test may be taken with tester No. 36. This instrument (Fig. 661) is designed for measuring the current flowing in cable sheaths. The slider is adjusted until the millivoltmeter is undeflected, i.e. there is no difference of potential between *A* and *B*. In other words, the whole of the current flowing in the sheath is diverted between *A* and *B* to the lower path through the milliamperemeter, where its value is read direct.

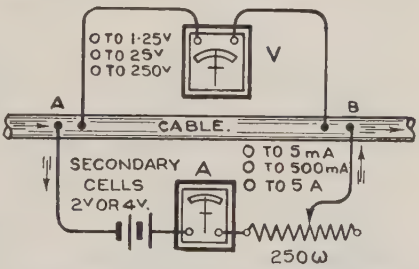

FIG. 661. TESTER NO. 36 USED FOR MEASURING THE CURRENT FLOWING IN CABLE SHEATHS

The distance between the points *A* and *B* should be as large as possible, but the length of the jointing chamber will suffice. Knowing the current in the sheath it is easy to calibrate a voltmeter so that its indications are directly related to the current flowing in the sheath.

The safest plan is to secure the greatest possible distance between tram rails and Post Office cables, but

in practice this is a counsel of perfection rarely attainable, because where the risk is greatest, there, as a general rule, the space available is most restricted. As tramway poles are often bonded to the rails they should be given as wide a berth as possible. Anything which can be done to keep the pipes and manholes dry is desirable, but here again the difficulties are often insuperable.

A liberal supply of petroleum jelly should be smeared over every part of the cable as it is drawn into the duct, so as to provide a protective coating as well as to serve as a lubricant.

If the pipes are perfectly dry or if the cables are well covered with grease, chemical, voltaic, and electrolytic action is excluded, but in practice these conditions cannot always be attained. The object in bonding iron pipes is to prevent any current that may be circulating in them from passing into and from the cables at the points where the line of pipes is broken by a jointing chamber; if moisture is present at these points electrolytic action must inevitably result where the current leaves the cable to return to the pipe. In many known cases the effect was of sufficient magnitude to destroy the lead sheathing and expose the paper insulation.

The method of bonding iron pipes together is illustrated in Fig. 662. A bolt-hole is made in the spigot end of the pipe; a thin lead sleeve is slipped over the slightly conical head of the galvanized iron bonding bolt, whilst a washer, recessed to receive the lead strip used for electrically connecting the successive pipes across the jointing chamber, is placed beneath the nut. When this nut is screwed down, the lead between the pipe and the head of the bolt and that between the washer and the top of the pipe (which is, of course, previously scraped quite clean) is subjected to compression, thus establishing an intimate electrical contact between the

pipe and the lead strip. For bonding the pipes which have already been laid, Buller's patent clips are employed; they fit over the outside of the pipes and serve to maintain the lead connecting strip in firm and complete contact. Where there are several pipes in the one box, the ends of all the pipes are bonded together, and also to the various cables which they contain, by lengths of lead strip. It should be pointed out that the ordinary leaded joint (see Fig. 624) between the various pipes forms a fairly satisfactory electrical joint, notwithstanding the two coatings of Angus Smith compound which intervene between the socket, the lead, and the spigot of each pair of pipes.

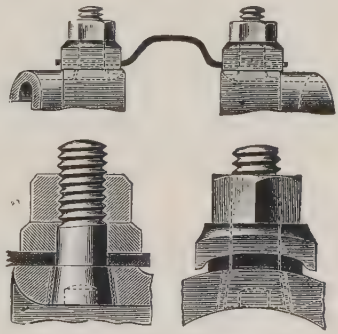

Fig. 662. Buller's Bonding Bolts

At first sight, it would appear that all that is necessary is to determine the positive or danger areas and to earth the cables in these areas, and so drain away the leakage current harmlessly. But, the fact is that it is practically impossible to sink, in public streets, earth plates which are of large enough dimensions to provide a sufficiently low resistance earth to drain off any appreciable portion of the sheath current. Here it may be well to emphasize that palliatives of this character should not be considered until the power circuit authorities have fully carried out the requirements of the Ministry of Transport.

To bond the cables to the rails in positive areas is not sound, since this, by reason of the low resistance path, attracts more current to the sheath and quite likely transforms previously safe into dangerous areas. Then, too, it is important that the tramway authority

shall not bond their feeder cable sheaths to the busbar earth connections, since the effect of this is to extend the single earth connection at the station to the length of the feeders, and so to produce conditions which aggravate the leakages.

In colliery districts, leakage current has been traced to the colliery supply cables, which are of the concentric type with the outer conductor earthed. The fact that these cables may be a 1,000 ft. or more below the surface is liable to cause this source of an apparently unexplainable current to be overlooked.

The whole subject of leakage currents is one which is causing extreme anxiety throughout the world, and so far it cannot be said that the problem has been solved. It can, however, be said that the wisdom of the Ministry of Transport regulations has been proved by the vastly less amount of damage here, as compared with that experienced in countries where no such regulations exist.

INDUCTIVE DISTURBANCES

The inductive interferences between parallel single-wire telephone circuits led to the universal adoption of metallic circuits. Owing to the insensitive character of telegraph, in comparison with telephone, receiving apparatus, no difficulty was experienced with single-wire telegraph circuits until they were brought into close proximity for long distances in paper core cables. In order to appreciate the nature and efficacy of the remedy it is necessary to investigate the typical conditions under which static and dynamic induction occur.

Consider three insulated brass spheres A, B, and C, occupying the relative positions indicated in Fig. 663, B and C being joined by a wire. The sphere A is positively charged by connecting to it the positive pole of an earthed battery. The positive charge upon A acts inductively upon B, with the result that a certain quantity of positive electricity is repelled along the wire to C, which becomes positively charged. The

action of A upon C has been ignored, since its effect is merely to reduce slightly the quantity of electricity flowing from B to C. When A is discharged, the negative charge upon B is no longer held by the positive charge upon A, consequently a current flows from C to B, and both spheres resume their normal or uncharged conditions.

Consideration will show that every change in the charge A produces a current between B and C. An increase in the positive charge or a reduction of the negative charge causes a current to flow from B to C, whilst a reduction of the positive or an increase in the negative charge produces a current from C to B. The induced current only flows while the charge upon A is varying.

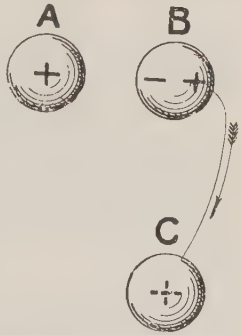

FIG. 663. ELECTROSTATIC INDUCTION

The connection of an earthed battery to the disconnected line A (Fig. 664) produces currents through the ends of the earthed circuit B which is parallel to it. The line B becomes negatively charged by the repulsion of a certain quantity of electricity to earth at either end of the circuit. A reversal of the battery, of course, produces a current flowing into the wire from earth at each end. If a relay is joined up at each end of the earthed circuit, and the disconnected wire is joined to a double current set, the signals sent on the key may be read upon the two relays, by carefully adjusting them to neutrality. For example, suppose that the letter " T " is sent. The spacing current charges the disconnected circuit negatively, which causes currents to flow from earth through the relays into the line, so causing the tongues to go over to S or leaving them in that position if already upon the left contacts. The depression of the key for the dash charges A positively and currents flow through the relays, in the direction U to D, to earth at each end. This commences the mark, which is not stopped until the key is released and momentary currents again flow through the relays.

This is a typical case of electrostatic induction, and it is to this effect that the whole of the serious trouble is due.

Electro-magnetic, or dynamic, induction is due to the fact that the lines of force generated by a current in the first circuit cut the conductor, and so induce a current in the second.

In Figs. 664 and 665 the relays are all shown with their " up " sides joined to line, whereas in practice the relay at one end

would have the "up" side to earth. It will therefore be realized that the inductive effect would be such as to produce reversed signals at the up station.

Two parallel earthed circuits are shown in Fig. 665, and this represents the case which arises in practice. When the battery is connected to circuit A, a current begins to pass along the line, and the wire is charged as indicated by the shaded triangle. Now the charge upon A produces momentary currents in the directions

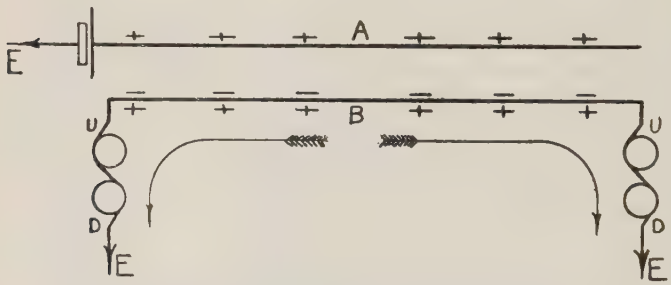

Fig. 664. Electrostatic Induction between Two Telegraph Circuits

shown by the double arrow heads, but as the charge is larger at the sending end, the current produced through the relay on the left is greater than that through the right-hand relay, the actual difference being in the ratio of two to one.

Whilst the current is attaining its full value the concentric lines of force round the full length of A cut through the circuit B, generating an E.M.F. in the direction shown by the single arrow heads. The value of the resulting induced current is, of course, equal at all parts of the circuit.

At the left-hand side of the circuit the dynamic and static effects add together, but at the other end they oppose, with the result that this end of the circuit may be practically unaffected, while pronounced currents

are produced through the left relay whenever the position of the key upon *A* is altered.

By considering a few typical cases it can readily be shown that the interference by induced currents is much greater at the end nearer the sending station than at the further end.

CABLING AND JOINTING

Cable Lengths. It is economical to manufacture lead-covered cables in long lengths, but the length

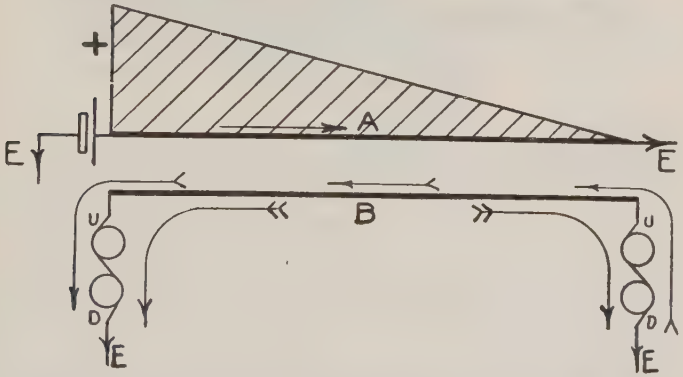

Fig. 665. Electrostatic and Dynamic Induction between Two Telegraph Circuits

which may safely be placed upon a drum for transportation should not be such as to cause the weight of the filled drum to exceed 3 tons. When this limit is passed, the weight of the drum is likely to damage the paving along which it may have to be rolled. The length of cable which may be pulled into the pipes in one operation depends upon the weight of the cable per unit length, its diameter, and also upon the character of the route. Where the route is either straight or the curvature slight, the standard length is 176 yd. from centre to centre, and the maximum 200 yd.

Pulling in Lead-covered Cables. It will now be possible to follow the various operations involved in pulling in the successive lengths of lead-covered cables.

Sweeps' rods of special construction are pushed through the pipe. These rods are of malacca cane, and are provided with a screwed brass socket and trigger at one end and with a suitable screwed fitting at the other. A rod is passed into the pipe, and a second length screwed on, and automatically locked by the spring trigger, which prevents the rods from unscrewing whilst being pushed through the pipe. As each rod is pushed up the pipe another is added, until finally the two jointing chambers

Fig. 666. Cable Grip

are linked by a continuous length of rods. A rope is next attached and pulled through by withdrawing the rods.

The next operation has for its object the cleaning and testing of the conduit into which the cable is to be drawn. The rope is joined to a mandrel, a circular brush about 12 in. long and a test piece of cable roughly 6 ft. in length. For example, a length of 800 pair 10 lb. cable might be used in testing one of the ways of a multiple duct. This piece of cable is painted over, and the whole train, followed by a second length of rope, is pulled through the section. The test cable is carefully examined for any trace of damage, and when this occurs the defect is, of course, remedied before the new cable is pulled in. The position of a defect is usually apparent from the extra stress which has to be exerted to pull the test cable and mandrel past it.

The rope used for pulling in the cable is usually of the 3 in. size (i.e. the circumference is 3 in.), and when new has a breaking stress of about 35 cwt. which ensures that it may with safety be used in all cases in which the stress does not exceed 9 cwt. if the rope is new or 6 cwt. if old but in good condition.

The drum containing the length of cable is conveyed upon a low wagon or " float " to the box from which it is to be paid into the pipe. The battens are removed, the drum rolled into position, and a steel spindle passed through the holes in the centre. The drum is then raised upon lifting-jacks sufficiently to permit it to revolve freely. The Duff cable drum jack (made by George Hatch, London), which is light and portable, is convenient for this purpose.

The " cable grip," illustrated in Fig. 666, is constructed upon

the principle of a well-known puzzle toy. The lead sheathing at the end of the cable is beaten down on to the conductors with a boxwood dresser, so as to prevent the lead sheathing from taking the whole of the stresses which result during the pulling-in process. The grip is passed over the prepared end of the cable, to which it is lashed as indicated. The effect of stress applied to the loop is merely to tighten the grip of the latticed wires upon the cable. In this way the need for cutting away the end of the latter is obviated, and the saving of even a foot of cable at either end of each length represents a considerable sum of money where many lengths of large cable are concerned.

The grip, having been attached to the cable, is joined to the pulling-in rope by means of a Keystone connecting link (Fig. 667) connecting the loop of the grip and the ring upon the rope.

(Open) (Closed)

Fig. 667. Connecting Link

While these preparations are being made, the winch is placed in position and the rope given three or four turns round the barrel. Where the pulling in is done from a manhole, a snatchblock attached to the anchors in the floor (see Fig. 668) is placed upon the rope to prevent chafing upon the edge of the pipe and manhole. In Fig. 668 a winch worked by a small water-cooled petrol motor is shown, and in Fig. 669 a motor winch of the type at present used by the Post Office* is illustrated.

The cable drum is now turned and the cable bent into a curve of wide radius, and the end placed within the pipe, the slack rope being taken up from the distant end. The actual pulling in of the cable now commences, the cable drum being turned carefully to bend the cable so that it enters the pipe without injury to the sheathing.

In all these operations the guiding principle is to deal with cable just as though it were a hollow tube of lead.

As the cable passes into the pipe it is heavily anointed with petroleum jelly, which acts as a lubricant, thus reducing the friction between the cable and the pipe. Since the grip end of the cable has to be drawn through the whole length of the pipe, while the last yard of cable is only drawn through one yard

* " Portable Petrol-driven Winch " ; by J. G. Hines. *P.O.E.E. Journal*, Vol. II, p. 310.

of pipe, the quantity of petroleum jelly spread upon the cable is gradually reduced as the pulling-in proceeds.

When the cable has been pulled in as far as possible, i.e. when the end of the rope reaches the snatch-block, the length of cable projecting from the pipe is usually insufficient to admit of jointing, and it is therefore necessary to remove the grip and to obtain a fresh purchase upon the cable. This is accomplished by placing a split grip over the cable and lashing the pulling rope along the 12 in. of the grip as near to the pipe as possible. In this way the extra yard or so of cable may readily be obtained, it sometimes being necessary to move the grip back once or twice to obtain the requisite length of cable in the jointing chamber.

After the cable has been pulled in, the grip is removed.

When the cable has to be pulled into joint boxes, a snatch-block or pulley is securely lashed to a balk of wood placed at the bottom of the box, and wedged in position by timber placed along the floor of the box, and held down by two upright pieces of wood bearing upon the two planks placed over the box to carry the winch. If this arrangement were not made it would be necessary to remove the box, open out the ground, and back-stay the winch in order to avoid a heavy upward pull upon the pipe.

In arranging the length of the cable drawn in, provision must be made for the end damaged by the grip, and for a sufficient overlap for jointing.

Other considerations being equal, it is preferable to pull the cable in in the direction in which the pipes are laid, i.e. in the direction of spigot to socket, since there is thus no chance of the grip wedging against the spigots.

Where there is a curve in the route the cable should enter the conduit at the end furthest from the curve, since the shortest possible length of cable is thereby pulled round the curve. Again, it obviously requires less force to pull a cable through a pipe having a downward gradient than to pull it upwards, and therefore when the route is hilly, advantage may be taken of this fact.

It is always desirable to pull the various cable lengths in the same direction, so that the colours may follow in the same direction upon both sides of each joint, and this becomes compulsory with cables that are to be balanced and loaded.

Jointing Lead-covered Cables. A gothic-shaped tent, consisting of canvas mounted upon a wooden or steel tube frame, is erected over the jointing chamber (which is first dried out), or hole in the ground where the joint is to be made, and in order to avoid any risk of fire, the spirit lamp used for soldering, etc.,

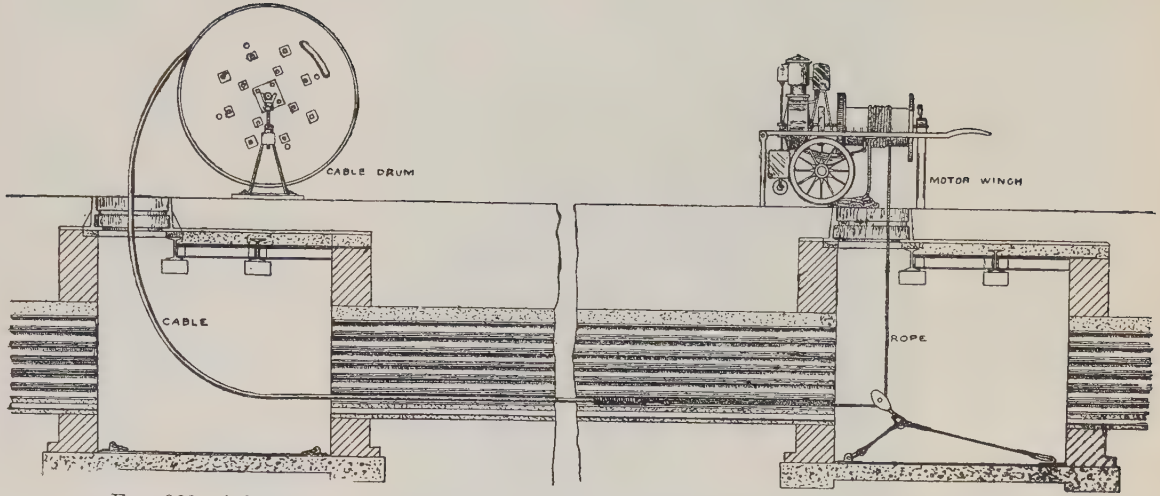

FIG. 668. A PAPER CORE CABLE IN COURSE OF DRAWING-IN BY MEANS OF A MOTOR WINCH (NOT P.O. PATTERN)

is held in position by springs and is surrounded by a metal shield which is secured to the tent. In the case of roadway manholes a circular guard is placed round the entrance.

The cables are cut and the lead sheath removed so as to leave the amount of overlap required for the joint, this varies from 10 in. with very small, to 2 ft., or even more, with large cables. The exposed conductors upon each side are of sufficient length

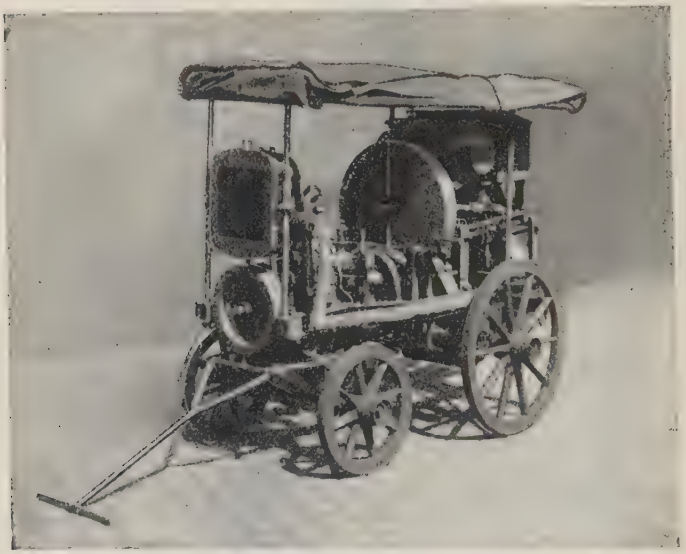

FIG. 669. MOTOR WINCH
The Warping Drum is at the right-hand end of the truck.

to reach to the point upon the opposite cable where the lead sheathing ends. A lead sleeve of the requisite length and diameter is then passed over one end of the cable and pushed up the pipe so as not to impede the operations now to be described. In each cable the wires are separated, tied up in half-layers and bent up at right angles to the cable. The jointing of the conductors then commences, starting with the lower wires in the outer layer, then the lower wires in the next layer, and so on until the lower half has been dealt with. The upper wires are next jointed, but this time working from the centre outwards.

The method of jointing varies with the type of cable, and two illustrations typical of the rest will be given :

First, a multiple twin cable, with conductors of 70 lb., 100 lb., 150 lb., or 200 lb. gauge, in which each wire is loosely but completely enclosed within a paper covering served with a wrapping of thread, having a long lay. Secondly, a multiple twin cable, with 40 lb. conductors.

In the first case (Fig. 670) the spiral wrapping of paper which encloses *both* wires is tied and the surplus paper removed; the spiral thread on *each* of the two

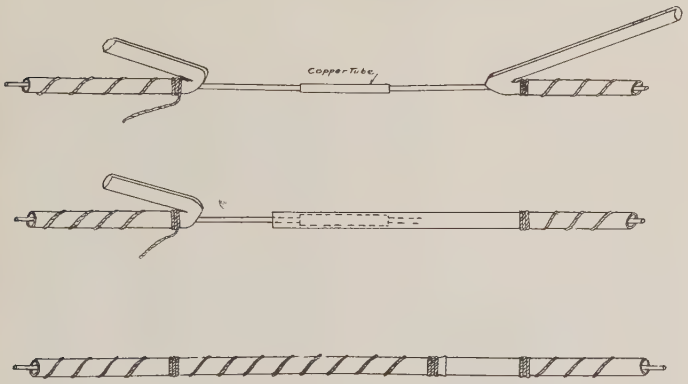

FIG. 670. METHOD OF JOINTING 100 LB. CONDUCTORS

wires to be jointed is unwrapped to about 2 in. from where the conductors are to be cut, and the thread is tied over the paper. One of the loose threads is then cut off, while the other, about 12 in. long, is retained.

The paper is unwrapped to the point at which the thread is tied, and cut so that the remaining length will overlap the centre of the joint about $1\frac{1}{2}$ in.

The conductors are cut so that they abut when brought together, the ends are cleaned with glass paper, inserted in a tinned copper jointing sleeve, and soldered with resin as a flux.

The paper end without thread is then replaced over the joint, the other paper end is wrapped over it, and

the 12 in. of thread is now wrapped round the paper and tied.

In jointing 40 lb. and lighter conductors, a paper sleeve is first pushed over one of the wires, then the two wires should be given three or four twists in a length of $\frac{1}{2}$ in. with the paper insulation intact upon both wires (Fig. 671). At the end of this preliminary twist

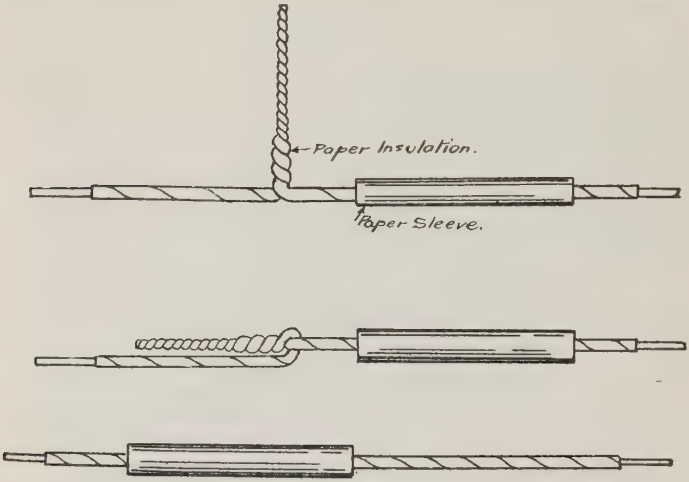

Fig. 671. Method of Jointing 40 lb. Conductors

the paper is removed, the conductors cleaned, twisted, and the surplus wire cut away, leaving $1\frac{1}{8}$ in. of twisted conductors. This twisted joint is made with the fingers with ample tightness and security. The paper sleeve is then pushed over the joint.

Joints between 40 lb. conductors, or conductors which are to be balanced or to be impregnated with compound, are soldered.

Consideration will show that if the whole of the conductor joints are made at one point, the resulting joint will be of an extremely bulky description, and that the sleeve would take the form of a spheroid.

This is, however, readily obviated by carefully spacing the joints, and, generally speaking, the diameter of the final paper wrapping does not greatly exceed that of the lead sheathing of the cable itself.

In some cables there is no serving of thread over each single wire, but the method of jointing is scarcely affected by this variation. It is, of course, essential that great care should be taken to join each pair of wires through to another twisted pair, since the result of a mistake is to destroy the advantage of the twist.

The paper sleeves are placed within a circular tin box resting within a bucket which is warmed by the flame of a spirit lamp placed beneath it. This ensures that the sleeves shall be perfectly dry, since the bucket, etc., is kept under cover within the tent or manhole. When the last joint has been made the wires are thoroughly dried with a charcoal brazier, or, when the confined space would cause the fumes to be felt, hot powdered quicklime may be laid over the conductors. The test for dryness consists in holding a cold mirror upon the joint, which is not sufficiently dry until not a trace of moisture is observable on the glass.

Joints have sometimes been dried by boiling out layer by layer with paraffin wax, heated above the boiling point of water (to 350° F.). Instead of using a brazier, the hot wax is poured over the completed joint, care being taken to preserve the air space and thus prevent the joint from becoming solid, a condition which would effectually stop the passage of dry air through the joint when desiccating the cable. The advantage claimed is that the insulation of the cable ends is maintained during jointing.

The joint is then spirally wrapped with paper. When an air nozzle is required a hole is cut in the paper at the point below it. The lead sleeve is next pulled over the joint, and is secured to the sheathing upon either side by plumbers' wiped joints (Fig. 672). Incidentally, it may be remarked that considerable skill and some

experience is needed in this operation. The copper wires within the cable conduct the heat of the metal away somewhat rapidly, and there is therefore a risk of a defective joint. The "wipe" should be quite uniform, perfectly homogeneous, and without any trace of eccentricity. The heat applied during the "wiping" usually expels any remaining traces of moisture through a small hole made in the centre of the sleeve or through the open air nozzle. Air nozzles, however, are fixed only as a temporary measure for desiccating purposes, and when removed the hole is

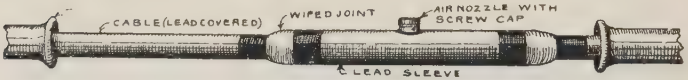

FIG. 672. COMPLETED JOINT PRIOR TO THE REMOVAL OF THE AIR NOZZLE

closed by a patch wipe. A patch wipe is used similarly to close the vent hole when an air nozzle is not fitted.

Joint Testing and Dry-air Plant. Every wiped joint is tested by means of a hand-pump or a portable desiccator mounted upon a truck. These comprise an air pump worked by hand or in some cases by a small petrol motor. These draw air from the atmosphere, and pump it through cylinders containing calcium chloride, thence into the cable, by means of a length of flexible tubing screwed on to the air nozzle.

All plumbers' work is tested by smearing the wipe with soapsuds, whilst an air pressure of at least 15 lb. per square inch is maintained. Every part of the joint is examined with the aid of a mirror for the presence of air bubbles. If any defect appears the joint is always remade entirely, and no attempt at rectifying the defective wipe is permissible.

The pressure test of a section of a new cable is made by covering the end of the cable with a lead cap fitted with an air nozzle, and connecting either an air or a

carbonic anhydride desiccator with a pressure gauge at each end. When the two gauges each register a pressure of 20 lb. to the square inch, the plumbers' wiped joints are smeared with soapsuds and examined. There should be no observable fall of pressure if the cocks are closed (thus sealing the cable), within twenty-four hours. If the older and less sensitive gauges are used the period is increased to seventy-two hours.

A defect in the sheathing would be indicated by the occurrence of a leak after the whole of the joints had been found to be perfect.

The advantage of the dry-air plant lies not only in joint testing, but also in the fact that any trace of moisture may be expelled by pumping dry air through the cable. This is the object of the calcium chloride, which is highly hygroscopic, and serves to remove every trace of moisture from the air which passes over it. It is, of course, necessary periodically to renew the calcium chloride.

When desiccating a cable it is best to restrict the rate at which the air passes through the cable, and this is accomplished by fixing an escape valve to the air nozzle at the end of the section and setting it to blow at 8 lb. It is preferable to place the desiccator in the centre of the section to be dealt with and to blow each way, rather than to place it at one end.

At some of the larger exchanges, an electrically-driven dry-air plant is permanently installed. A view of such a plant is shown in Fig. 673, from which it will be observed that the air is passed through a container and finally through the cylinders on its way to the cables. The duplex compressor or pump is driven by a 2 h.p. motor, mounted upon the bed plate. Escape or safety valves set to blow at 20 lb. are provided both upon the pump and the container, which latter also carries a pressure gauge. The desiccator consists of five cylinders, within each of which is placed a muslin bag containing the calcium chloride. In some of the

older exchanges the dry-air supply is permanently connected to every cable, a tap being interposed upon the branch pipe.

A motor desiccator, driven by a small single-cylinder water-cooled petrol motor, mounted on a truck, is extensively used for testing and drying cables remote from a stationary plant.

Another method, now most extensively employed, of drying out cables, is by using carbonic acid gas (CO_2) to absorb the moisture. The gas is obtained in cylinders in liquid form at a pressure of 750 to 800 lb. per square inch. A reducing valve is used to release the gas at a pressure of 15 lb. per square inch, and gauges are fitted in the same way as with the chemically-dried air process. In exceptionally cold weather the gas is passed through a copper coil placed in a circular tank or pot filled with hot water. This effectually prevents the admission of carbonic acid gas snow into the cable.

Tests During Construction. Systematic tests are applied to the cable as the jointing work proceeds. Tests with a No. 2 detector and a 2-cell battery are made (1) to prove the continuity of each wire, (2) to verify the correctness of the jointing by ascertaining that there are no crosses, and (3) to ensure that there are no contacts or earth faults. Megger tests are made to ensure that the insulation resistance is maintained and the conductor resistance is measured by a Wheatstone bridge to detect any cases of imperfect conductor joints. If the cable is of the M.T. type, and is to be balanced and loaded, the balancing tests* are also applied. The absence of cross talk is proved with portable telephones during construction, but the final test is made with table telephones. In addition to these purely electrical tests, the airtight condition of the cable is proved by pressure testing with a desiccator,

* " Balancing of Telephone Cables which require to be Loaded for Superimposed Working," by S. A. Pollock, *P.O.E.E. Journal*, Vol. VII, p. 41, 357.

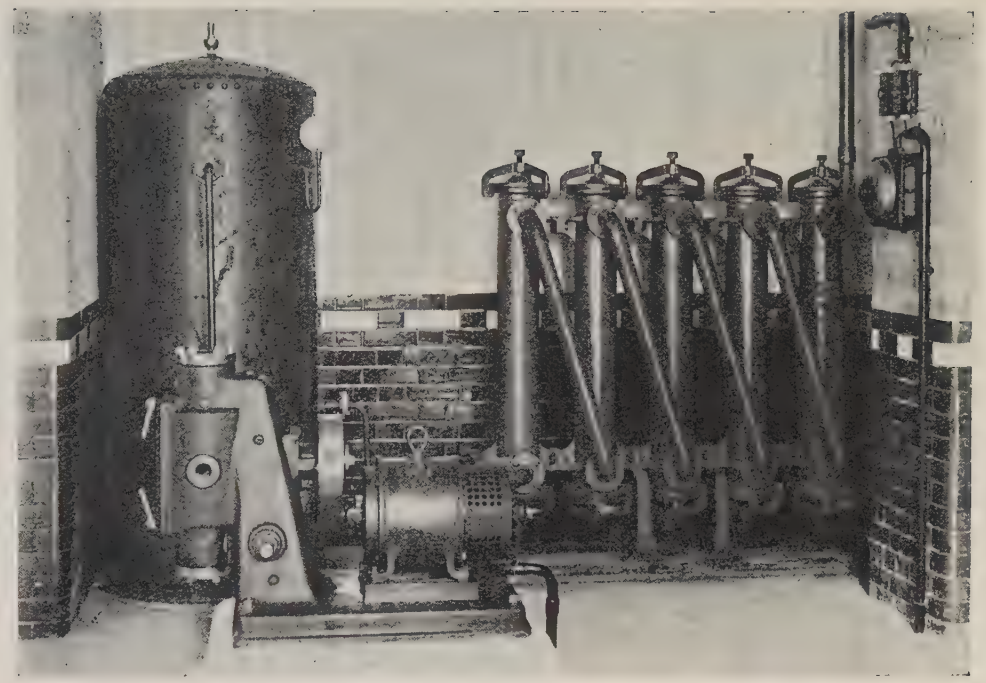

Fig. 673. General View of an Electrically-driven Dry-air Plant

thus ensuring that the plumbers' work is satisfactory and that no cracks have developed in the cable as the result of handling during the drawing-in operations.

The insulation standard for trunk cables is 10,000 megohms per mile, and a sufficient number of wires is bunched to obtain a definite reading on the megger. The conductor resistance tests for high resistance joints are made at 1 mile intervals, and the cross-talk tests on completion of the cable. Pressure tests are made at half-mile intervals.

CONNECTION BETWEEN UNDERGROUND AND OVERHEAD ROUTES

In cases where protection from lightning or from power circuits is unnecessary, the connection is made by means of a Cable Distribution Plug which preserves the airtight condition and high insulation of the cable. The plug consists of a solid casting of lead through which pass the requisite number of two-wire lead-covered enamel and cotton insulated cables, the cores of which have been served with a coating of insulating compound in order to make them airtight. A lead sleeve of the general shape indicated in Fig. 674 is passed over the cable, and the conductors of the latter are then jointed to those of the two-wire lead-covered cables upon one side of the plug. These two-wire cables have enamelled conductors and are each served with cotton. The enamel on the plug conductors is removed with emery paper and the joints are insulated with paper sleeves which have previously been impregnated with paraffin wax. Upon completion of the jointing the sleeve is slipped over and the larger end soldered to the plug, while the cable end is soldered or wiped to the cable in the ordinary way.

For subscribers' circuits the plugs are formed of twin cables with 10 lb. conductors, which for 4 and 7 pair plugs are 6 ft., and for larger plugs 10 ft. in length (colloquially termed "tail ends"), and are thus long enough to reach the pothead insulators. The plugs have

40 lb. conductors when used for terminating telegraph, trunk, or junction cables. If a pole test-box is used the twin leads of the plug are jointed to twin I.R.V. core cables, which latter are connected to the tags.

Terminal Blocks. This fitting (Fig. 675) is now superseding the cable distribution plug. The cable is sealed at the back of the box with insulating compound, and the leads to the insulators are taken from the tags as and when required for use. This presents advantages in flexibility when circuit changes are required.

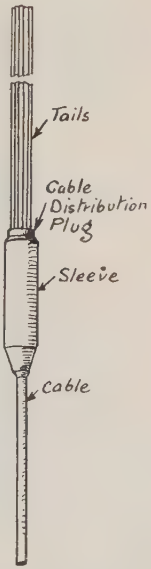

FIG. 674.
CABLE DISTRIBUTION PLUG

Termination of Cables. Local and junction cables are carried to a point within a few feet of the main distribution frame. They are there connected to a suitable length of lead-covered cable of similar formation but with conductors insulated with silk and cotton and impregnated with beeswax, which effectively seals the exchange end of the cable. At the main distribution frame the lead covering is removed from the silk and cotton covered cable, and the wires are laced out on the line side of the frame, the ironwork of the frame being served with adhesive insulating tape at all points where the laced cable is secured.

For loaded and balanced trunk circuits lead-covered cables, having enamelled conductors insulated with silk and wool, are used. When transformers are fitted for superposed working a pothead joint is formed with 20 lb. V.I.R. wires M.T.

Cable Distribution Heads. A series of very complicated circuit connections between several cables may have to be made, and for this purpose a cable distribution head is sometimes employed. It consists of a cast-iron box with 4, 6, or

8 gunmetal linings to which cables may be wiped, and is furnished with an iron lid secured in position by bolts and nuts. It is rendered watertight by machining the surfaces and the interposition of a suitable washer.

Such heads were at one time used to connect main distribution cables in London, but the present practice is to use only sleeves and plugs. C.D. heads should be used only where no other arrangement is practicable, and at the earliest possible moment the conditions which led to the requirement should be changed, since the difficulty in maintaining the heads air-tight is very great.

Multiple Joints. The tapering system of cabling necessitates the division of large cables into smaller ones. For example, a

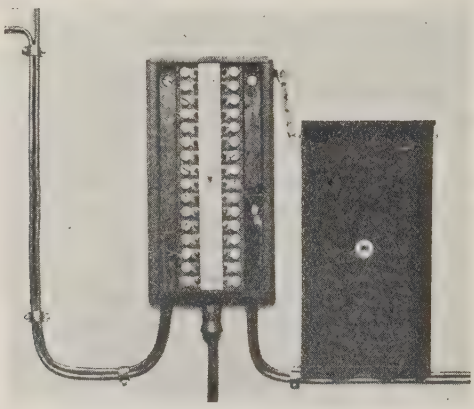

Fig. 675. Terminal Block

1,000-pair cable may be divided into 400 pairs to serve a lateral area and a 600 pair proceeding onwards. These cables are each in turn split up into smaller cables as they go onward and outward to the various D.P.'s. The standard method of joining a large cable to two or more smaller cables is by forming a solid plug (Fig. 676). The smaller cables are passed through a lead sleeve about 6 in. long, leaving sufficient cable for jointing. The sleeve is then packed with lamp cotton so as to form a cup about $\frac{1}{2}$ in. deep containing the cables. Plumbers' solder in a molten state is then poured into the cup, and when it has cooled the lamp wick is removed, since it may contain traces of moisture and the joint between the large and smaller cables is made in the ordinary way, and is closed by wiping a

lead sleeve on to the large cable and the sleeve of the plug containing the smaller cables.

Pole Test Boxes. Where a short trunk cable joins a long, open route, the liability of damage to the cable due to lightning, etc., is considerable, hence full protection becomes necessary, and this is afforded by the provision of a pole test-box "G."

The box is of teak, varnished and painted outside. and is divided into two compartments by a central partition. The doors are hinged and bed against rubber

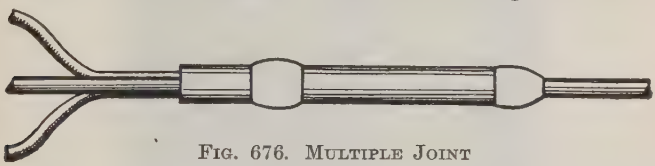

FIG. 676. MULTIPLE JOINT

cushions fixed round the edges of the box. Each door is closed by screws, so shaped that they cannot be removed from the door, and a special screwdriver is provided for turning them. This device renders it extremely unlikely that any mischievously disposed person could open the box, provides a secure and light fit between the doors and the box, and precludes the possibility of the loss of the screws. The boxes are made in six sizes to accommodate 16 to 96 wires, that illustrated in Fig. 677 being a two-panel box for 32 wires. Fig. 678 shows the front compartment containing the glass tube fuses, the earth bar, spark gap protectors, wire links and ebonite blocks which insulate the wires. The blocks *A* and *B* fixed at each side of the earth bar are furnished with projecting tinned brass pieces which are wedge-shaped and knife-edged. The edges are polished and are separated by $\frac{1}{64}$ in. from the earth bar, which is also polished at the sparking gaps, thus forming a lightning protector of simple form. The tubular test pillars are normally connected by a removable wire link. Six brass earthing pillars

and three cup earthing terminals are provided at the bottom of each panel; the former are for connecting wires to earth by means of test plugs and cords, and the latter for earthing an open wire direct, i.e. eliminating

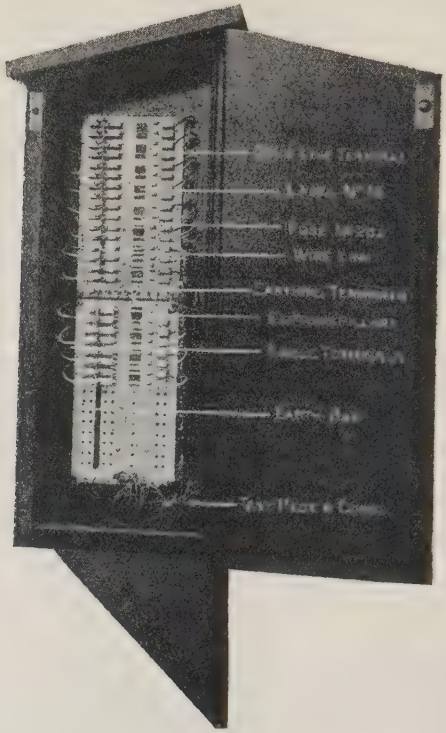

Fig. 677. Pole Test-box G

the fuse. Each 16-wire panel is also provided with a separate sheet-iron cover which completely covers the testing side of the panel.

In the back compartment, accommodation is provided for the leads from the open lines and the underground cables which are led in at the bottom. The

leads from the open wires are connected direct to the fuse terminals. The underground cable terminated in a C.D. plug and the twin leads from the plug are extended by cable I.R.V. 1 pair 40 lb. to the protector terminals. An additional length of 4 ft. of cable is allowed for the formation of an inductance spiral. The lead covering is stripped off each lead for about 5 ft., the end of the lead sheath being sealed with Chatterton's compound. Each pair of leads is given a few turns round a bobbin (to introduce the requisite inductance) and is then

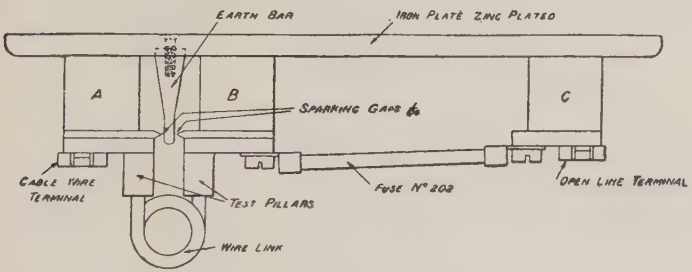

FIG. 678. PLAN OF INSULATING BLOCKS, WIRE LINK, AND FUSE

given two turns around a cuphook in the side of the box before being connected to the protector terminals. Thus the open wire circuit passes through a fuse, a wire link, with a lightning protector interposed, and an inductance spiral before reaching the direct leads to the underground cable.

The arrangements at the junction of a trunk underground and an open route are conventionally indicated in Fig. 679. The underground route commences at the underground chamber and ends in a terminal block fixed on the terminal pole. The terminal block is connected to the pole test box, and thence to the pothead insulators by the requisite number of lead covered one-wire cables having 40 lb. conductors insulated with vulcanized india-rubber.

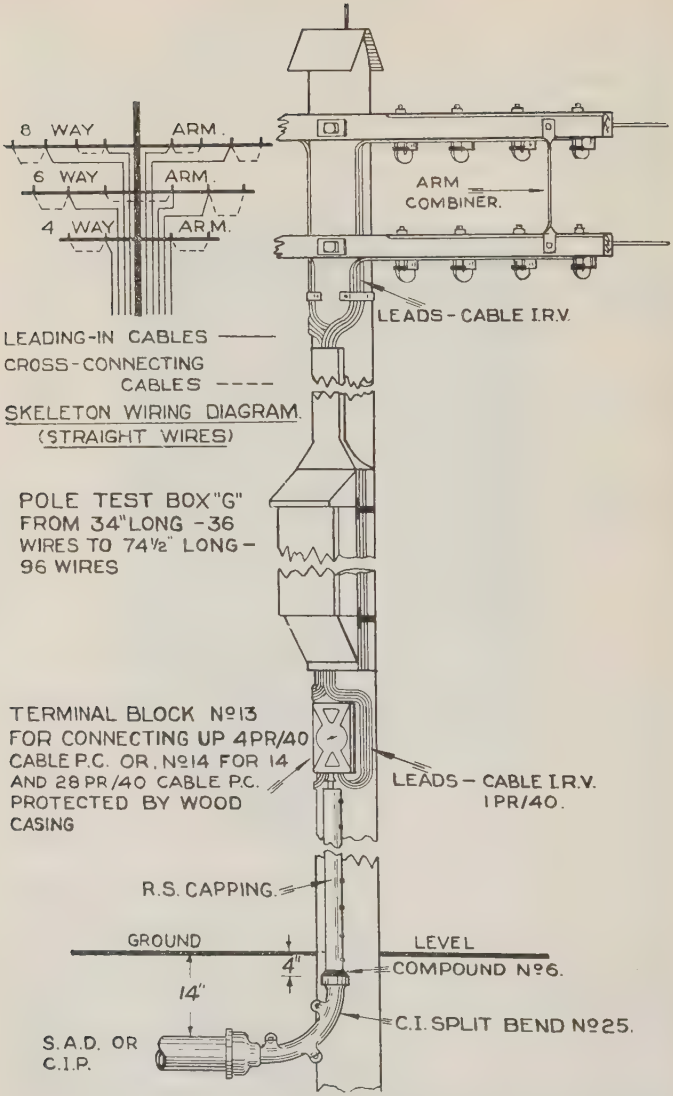

FIG. 679. GENERAL VIEW OF THE ARRANGEMENTS FOR CONNECTING AN UNDERGROUND CABLE TO AN OPEN LINE

FAULTS

A total disconnection in a cable may be localized by measuring the capacity of the wire from each end of the cable. A partial disconnection or a high resistance joint can be located by special tests devised by the Post Office.

The positions of an earth or contact fault may be localized as described on page 975 *et seq.*

The breakdown of the whole route, due to the entrance of moisture, is usually due to a defective wiped joint. When the wires are periodically tested, there is frequently ample warning that a defect exists and its position may readily be located by electrical tests.

The location of faults on main trunk cables is a highly specialized work which has been vastly developed during the past few years, but it is not possible to deal adequately with the subject in the present work.*

* *I.P.O.E.E.*, Printed Paper No. 98, "Maintenance Precision Testing of Main Trunk Cables," by B. Lister; and No. 104, "Cable Testing," by E. S. Ritter.

CHAPTER XXIV

AERIAL LINES

Ultimately, the only aerial lines which will still exist will be those carrying minor telegraph circuits, telephone subscribers' circuits, junction circuits to small exchanges, and coast-guard circuits. Poles are erected on public in preference to private property because such routes are more accessible, less subject to compulsory removals, and wayleave difficulties are seldom experienced. Routes on chimney brackets are used only for one or two isolated circuits in exceptional cases.

Timber. Telegraph poles are obtained from Scandinavia, Finland, and part of Russia, and are cut from red fir-trees.

Iron poles are not used owing to their extreme costliness.

The timber selected for poles should be quite sound and hard grown (that is, with the annular rings closely pitched), straight, and free from large or dead knots. The trees should be felled between the 1st of November and the 28th of the following February, when the sap is in the roots. The natural butt of the tree should be left, but the branches and the bark, with all the adhering soft wood, removed, so as to leave a clean, hard, smooth surface. During the process of shipping, etc., the poles must not be left in water for more than seven days.

When creosoted poles are to be stored they may be piled together as closely as is desired, but the bottom poles should be raised a few inches above the ground by suitable supports. Timber which has not been subjected to any preservative process, and poles treated by the Rüping process should invariably be stacked in such a way as to provide a perfectly free air circulation to every part of the wood.

Preservative Processes. Wood is subject to deterioration by decay, which may be caused by dry or by wet rot. The former is caused by a species of wood fungus which in time reduces the wood to a fine powder.

Since this effect only occurs in very enclosed places where there is no circulation of air, telegraph poles are entirely free from it. Wet rot is, however, of a far more serious character, and a pole which had not been subjected to any treatment would not last more than five or six years—possibly even less. The fermentation of the sap will in time reduce the interior of the pole to a pulpy condition, and, finally, instead of a solid pole nothing more than a shell remains. This state of affairs is readily detected by the hollow sound resulting from a blow with a hammer. The rotting of the pole at the ground-line (frequently termed the "wind and water" line) is of far more frequent occurrence, and is produced by the continual alterations of temperature and moisture. The temperature above the ground-line is higher than that of the soil, and thus moisture is drawn up each fibre of the wood. This moisture then expands, bursts its cell, and finally escapes as vapour. Wood is extremely durable when kept continuously dry or continuously wet, but is not so when the conditions alternate as rapidly as is the case in this country.

The most efficacious preservative process is the injection of creosote into the wood, but care must be taken that the wood is perfectly dry before being treated, otherwise more harm than good results. The life of a pole when properly treated is on the average in excess of thirty years.

The various preservative processes may be described as consisting of the injection of antiseptics or substances which oppose putrefaction. These substances combine with the sap to form insoluble compounds which cannot be acted upon by air or water. One great advantage of the creosoting process lies in the fact that, owing to its oily nature, it renders the pole practically waterproof.

The Rüping process, which is applied after the poles have been seasoned, is now the standard practice and results in considerable economy in creosote.

Air is forced into the wood at a pressure of about 75 lb. to the square inch. Creosote is next injected under greater pressure, and then an air pressure of about 225 lb. is applied, thus driving the oil in to a considerable depth. When the pressure is released the compressed air in the interior of the wood drives out some of the creosote, and this effect is augmented by applying vacuum.* Only about 6 lb. of creosote per cubic foot is left in the timber.

Poles treated by this process have a dry brown surface of a pleasing colour and texture such as is only obtained with creosoted poles after they have been weathered for some years. An advantage gained by this process is that poles so treated can, when perfectly dry, be painted, whereas a pole creosoted in the old way cannot owing to the exudation of creosote.

A Rüpingized pole, which has to be painted, is first rubbed over with crude naphtha and all cracks and hollows filled with painter's stopping. Two full coats of knotting are then applied.

The top of a wooden pole is protected from the elements by means of a galvanized iron pole roof, Fig. 694. On small routes the top of the pole is cut as described, but a roof is not provided.

In some few cases where ornamental poles are specified pole finials, fitted with a dowel, are used instead of roofs.

Arms. The best material for arms is British oak, but Karri, spotted gum, blue gum, ironbark, and jarrah woods from Australia are also extensively employed. The arms are either creosoted or pickled in a solution of green oil (a tar product), copper sulphate, and chloride of zinc at 200° F.

The standard four-way arm for trunk lines, bored as shown in Fig. 680 is $48 \times 2\frac{1}{2} \times 2\frac{1}{2}$ in., for wires weighing 400 lb. or

* "The Decay and Preservation of Timber," by W. H. Matthews, *P.O. Electrical Engineers' Journal*, Vol. IV, p. 305.

less per mile, 48 × 3 × 2½ for larger wires and 48 × 3 × 3 when the wires are terminated. Arms carrying single-wire telegraph circuits are earth-wired with 100 lb. copper wire (Fig. 680) which is joined to the main pole earth wire by soldered joints. Those carrying telephone circuits only are not now earth-wired.

Four-way arms, 42 × 2¾ × 2¾ in., giving a spacing of 18 in. between the two inner insulators and 9 in. between the two insulators on each side of the pole, or eight-way arms 78 × 3 × 2¾ in. for through and 78 × 3½ × 3 for terminated wires, are used on subscribers and junction routes.

For minor telephone subscribers' lines with a maximum capacity of 16 40-lb. bronze wires, short poles, having arms

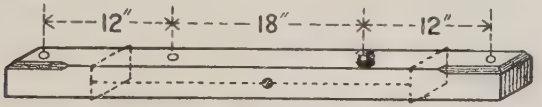

Fig. 680. A 48 in. Arm.
The dotted lines represent the earth wire

No. 28, of creosoted pine 36 × 3 × 2½ in. are used. Four insulators are fitted 2 in. and 11 in from each end of the arm.

The arms are always fitted upon the London or " up " side of the pole on main lines and on the side away from the exchange on distribution lines. With the aid of an arm gauge the notches, having a maximum depth of 1½ in., are cut so as barely to admit the arm, which is driven into the pole by means of a wooden mallet. In order to avoid rotting, the notches are painted over before the insertion of the arm with a mixture composed of one part gas tar and two parts of creosote by measure. In fact, wherever a pole is cut and the inner wood exposed a coat of creosote and tar should invariably be applied.

The centres of the arms are fitted 12 in. apart, and the first arm is placed 9 in. from the top of the pole (Fig. 694). The line wires attached to the four insulators carried by each pair of 48 in. arms thus form a 12 in. square upon each side of the pole, or a 9 in. × 12 in. oblong with the other arms mentioned.

The arm bolts are of galvanized iron, each provided with a nut and two washers, and are made in various lengths from 6½ in. upwards, with a diameter of ½ in. for the smaller, and ⅝ in. for the larger sizes.

Insulators.* The qualifications of the material used for insulators are—

(1) High specific resistance ; (2) Homogeneous ; (3) Not porous ; (4) Should take a high polish ; (5) Not subject to deterioration ; (6) Readily mounted ; (7) Preserves its form ; (8) As slight an affinity for moisture as possible ; (9) Tensile and compressive strength ; (10) Toughness.

The only material which satisfies these conditions is porcelain, and then only when well burnt, so that, a partial vitrification having taken place throughout, it becomes homogeneous and non-porous. The other possible substances which could be used are given below, together with the reasons which make them undesirable.

Ebonite is subject to surface deterioration (5).

Glass is hygroscopic (8), and very brittle (10).

Brown earthenware surface is not so smooth as porcelain (4).

Glass is used to a very considerable extent in America, but this is largely because insect growth takes place beneath the sheds of any opaque insulator and so tends to bridge across the bolt and the outer shed. Again the climates of this country and America are of widely different character, and in comparing types of insulator this factor should always be taken into account.

The choice of the material for use as insulators is practically limited to porcelain and earthenware. The former is exclusively used where high insulation is necessary, but upon minor lines there is no objection to the use of brown earthenware, which forms a less conspicuous target for stone-throwing.

The factors which determine the *design* of an insulator are mechanical strength and insulating properties.

* The manufacture of porcelain is dealt with in *Electrical Porcelain* by H. W. Brady. Reprinted from the *Electrician* of 29th May, 5th June, and 12th June, 1908.

The latter are secured (1) by increasing the distance to be traversed by a current leaking from the wire to the insulator bolt, (2) by reducing the section of the conducting film, (3) by the retention of a dry surface on one portion of the insulator, and (4) by securing that the general form of the insulator shall not help to retain deposit of dust, soot, etc., nor foster the growth of spiders or other spinning insects.

The insulator spindles or bolts are of steel; for heavy stresses and terminations a specially heavy form of spindle is employed.

The standard form of insulator is illustrated in Fig. 681. It is mounted upon a steel spindle the upper extremity of which ends in a flange and a coarse screw, while the lower part passes through the arm. The cup itself is of porcelain made in one piece and having a coarse female screw for securing it to the spindle. The cup is screwed down on to the indiarubber or felt washer which is placed on the upper flange of the spindle. This gives the arrangement a small amount of flexibility, which no doubt saves the cup from breakage in the event of sudden stresses, and it also serves to prevent fracture of the cup due to the differing coefficients of expansion of the metal spindle and the porcelain cup. The double shed secures a dry and comparatively clean part of the insulator, therefore increasing the resistance which a current encounters in passing over the surfaces from line wire to bolt. The outer shed in course of time becomes black by being coated with the solid matter (chiefly carbon) which the atmosphere contains. Also, the corrosion of the wire, if of iron, adds its quota to

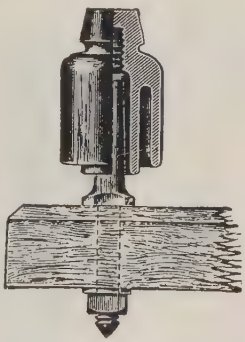

Fig. 681. Cordeaux's Double Shed White Insulator with Steel Spindle
(Insulator No. 6)

this deposit. The time taken for the deposit to accumulate depends entirely upon the character of the neighbourhood, but arrangements are made periodically to remove and cleanse the insulators.

These insulators are made in three sizes, the standard large (No. 6) for trunk lines, medium (No. 8) for 70 lb., and small (No. 11) for 40 lb. bronze line wire.

Terminal Insulators. Where wires are terminated as at the junction of underground and open lines, or where a very sharp turn in the line occurs, terminal

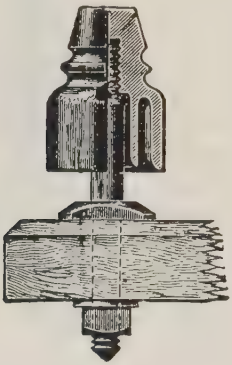

Fig. 682. Post Office Terminal Insulator
(Insulator No. 13)

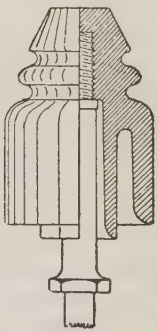

Fig. 683. Insulator with Two Grooves
(Small No. 12. Large No. 7)

insulators are employed for heavy gauge wires. These insulators are of the double shed screw-cup form, but are much heavier and stronger than the standard type, and are provided with two grooves. The steel bolt is also heavier, with a broad flange, and projects further into the upper portion of the cup, which is so shaped as to keep the point at which the wires are attached near to the arm, thus reducing torsional stress upon it. These details will, however, be apparent from Fig. 682. For small gauge wires insulators No. 12 (Fig. 683) are employed.

Where it is necessary to terminate conductors,

the vertical spindle of the insulator tends to cant the arm. In order to avoid this difficulty "J" bolts fitted with screw-cups of the terminal form are frequently employed (Fig. 684). The advantage gained is that the stress is applied directly in the plane of the arm-bolt, and there is therefore no tendency towards canting. Moreover, the arms are in such cases invariably fixed upon the further side of the pole so that the stress is not taken by the arm-bolt. The bolt is of $\frac{3}{4}$ in. galvanized iron when used for heavy conductors, but a lighter form, No. 8 ($\frac{5}{8}$ in.) is employed where the conductors are of small gauge terminated upon 3 by $2\frac{1}{2}$ in. arms.

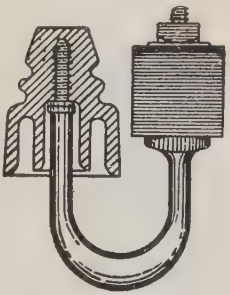

FIG. 684. J-BOLT AND TERMINAL INSULATOR

The terminal spindle (No. 6) is only employed when it is necessary to terminate heavy gauge wires upon both sides of the pole, as, for example, in the case of a route of open wires crossing a railway line. In every case in which the use of such a spindle would produce a torsional stress upon the arm, J-bolts are substituted.

Pothead Insulators. This insulator, which was invented by Colonel Sir T. F. Purves and J. Sinnott, provides the cheapest and most efficient method of connecting aerial wires to covered leads which has ever been devised. The connection between the open wire and the covered lead is made in a cavity formed at the top of the insulator (Fig. 685); this cavity is then filled with insulating compound and covered by a screw cap. In this way, a lead-covered cable may be carried up to the insulator, where the end is effectively sealed by the compound.

The insulating compound* is soft enough to be pressed cold

* "Insulating Compounds," *P.O. Electrical Engineers' Journal.* Vol. VIII, p. 183.

into the insulator top and is not materially affected in consistency by changes of temperature met with in practice. It has a high insulation resistance when dry, and this is maintained when in contact with water. Its composition is by weight: 56 per cent French chalk (magnesium silicate), 32 per cent Palm pitch, and 12 per cent coal tar.

The compound should be thoroughly pressed into the cavities of the insulators so as completely to enclose the bare wire joints, care being taken to see that the cavities are quite dry before it is put in.

Recently, a lightning protector provided with a sealing chamber has been designed for use at the leading-in point in subscribers' offices. The twin wire cable from the pothead insulator to the protector is thus sealed at both ends.

Fig. 685. Pothead Insulator (Insulator No. 16)

Leading-in. The leading-in of a single open circuit varies somewhat with the character of the building, but the position of the leading-in insulator (No. 16) is the determining factor in the choice of method. These insulators must be readily accessible so that in the event of a fault the lead to the instrument can be tested and renewed without difficulty. Hence, on high buildings the open wires are carried down the building, as shown in Fig. 686, by the use of an eaves bracket (No. 14). It is moreover desirable to choose such a position as will make the length of lead from the pothead insulator to the protector (inside the building) as short as possible.

When the building is comparatively low, and there are no intervening obstacles between it and the D.P., a bracket (No. 2 or 5) is fixed on the corner of the building as low as safely possible and the cable cleated along the wall to the point of entry, as shown in Fig. 722, but J-bolts should be used to avoid a torsional stress. Or again, an insulator spike No. 1 with an insulator spindle No. 7 of the type shown in Fig. 686 may be employed to terminate the open wires.

Whenever it is possible, it is preferable to run the

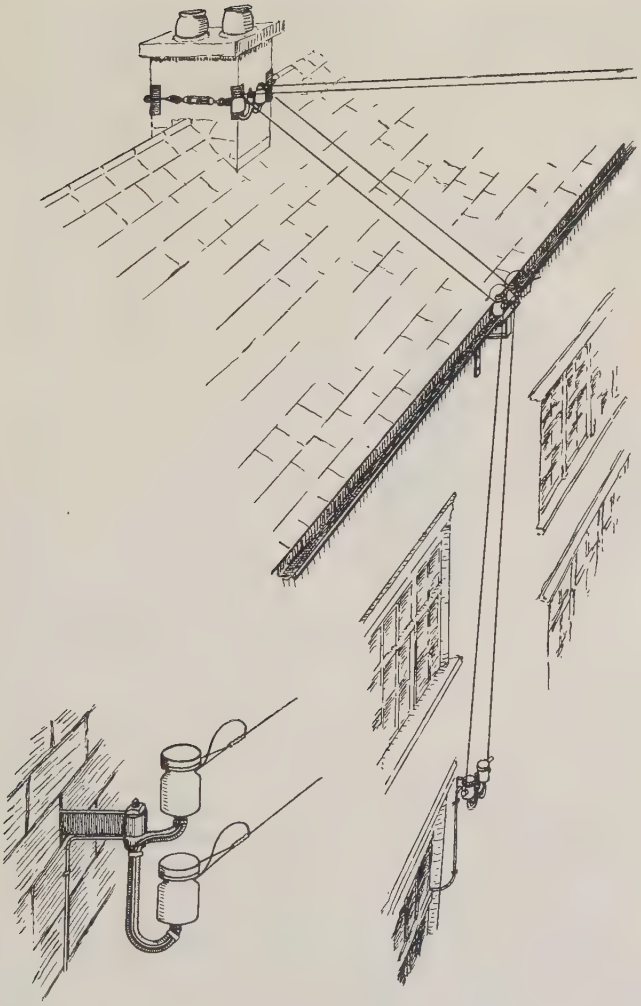

FIG. 686. LEADING-IN ON A HIGH BUILDING, AND A DIRECT LEAD-IN

pair of wires in a vertical plane from the D.P. to the bracket as there is then less liability to faults than with a horizontal pair such as the upper pair shown in Fig. 686. At the D.P., a terminal iron is fixed on the end of the arm to carry a double J-bolt (Fig. 686), and a similar bolt is fixed on the chimney bracket, the wires changing over from vertical to horizontal in the short distance to the insulators on the eaves bracket. Eaves brackets are, however, to be avoided unless there is no other possible method available.

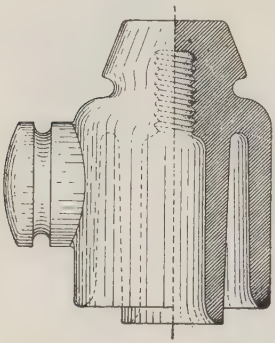

Fig. 687. Side-knob Insulator
(Insulator No. 10)

A single wire telegraph circuit is accommodated on a single bracket and is led in by lead-covered 1 wire 40 lb. conductor V.I.R. core cable.

Other Types. The side knob form of insulator (Fig. 687) is in general use to enable the pothead insulator to be fixed in a readily accessible position.

Fuse insulators have already been dealt with (*vide* page 931).

Line Wire Material. The choice is practically restricted to iron, copper, bronze, and the recently introduced alloy cadmium-copper.* Galvanized iron wire was at one time used in 200 lb. and 400 lb. gauges for telegraph circuits, but its life is limited, and owing to its greater weight and diameter it requires heavier poling than the electrically equivalent lighter bronze (99 per cent copper, 1 per cent tin) and copper wires.

Bronze can be used in smaller sizes than iron or copper. The breaking weight of a 40 lb. bronze wire is 200 lb., whilst that of a 70 lb. wire is 345 lb., or rather more than that of a 100 lb. copper wire. The resistance

* "Copper-cadmium wire," by N. F. Budgen, *Electrician*, 30th April, 1926.

is, however, very much higher, an ohm-mile of bronze wire weighing 1,820 lb. The 40 lb. wire is employed for telephone subscribers' aerial wires.

Cadmium-copper (copper 99 per cent, cadmium 1 per cent) has the same breaking weight as bronze with 84½ per cent of the conductivity of copper.

LINE WIRE

Material	Weight per mile lb.	Approx. standard wire gauge	Diameter in mils	Resistance per mile at 60° F.	Minimum breaking weight
Copper	600	6	193·7	1·4645	1800
	400	8	158·2	2·1968	1250
	300	9½	137	2·9291	950
	200	11½	111·9	4·3936	650
	150	13	96·9	5·8582	450
	100	14	79·1	8·7873	330
Bronze	70	16	66	26	345
	40	18	50	45·5	200
Covered wire Bronze	55	17	58·5	33·1	275
Cadmium copper	70	16	66	15	345
	40	18	50	26	200
Iron	400	7½	121	13·32	1200
	200	10½	121	26·64	600

One ohm-mile weighs lb.: (i) Copper 878·7 ; (ii) Bronze 1820 ; (iii) Cadmium-copper 1040 ; (iv) Iron 5328.

Excluding long trunk lines where heavy gauge copper wires were used to obtain the requisite transmission, the only wires likely to be used in future are cadmium-copper, 40 lb. for ordinary telephone subscribers circuits and 70 lb. for telegraphs, junction circuits, coastguard circuits, and subscribers' circuits in exposed situations. Bronze wire will, however, continue to be used on existing lines which at present carry bronze wires. In more exposed positions 150 lb. or even 300 lb. bronze wire has sometimes to be used.

The weight of snow and ice which a wire will carry before reaching the elastic limit varies with the gauge of the wire—for instance, a 70 lb. bronze wire will carry nearly twice the weight of ice which a 40 lb. wire would safely bear if erected in a span of equal length (see Table on page 1071). Since the quantity of ice which adheres to the wires is found, under like circumstances, to be practically the same with every gauge of wire, the light wires may be loaded up to, or beyond, the breaking point, whilst the heavier wires are but little affected. It is from this point of view that the diameter of open wires may not be reduced below a certain point. Again, the same gauge of wire erected in 60 yd. spans would safely carry twice the weight of ice per yard run as it would in 85 yd. spans.

The breaking weight of bronze is one and a half times, but its elastic limit is twice that of copper.

The elastic limit is the extreme point at which the wire on relief from the stress will return to its former condition. A stress beyond the elastic limit results in a permanent lengthening of the wire, and this entails re-regulation of the line.

Where it is not considered necessary to insist on power circuits being guarded an insulated bronze wire (wire P.B.J. q.v.) weighing 55 lb. per mile is used. The total weight of the wire and insulation is 134 lb., and the resistance approximately 29 ohms per mile.

Binding-in. Copper wires are secured to the insulators by binders and tapes (Fig. 688). The binder for 150 lb. wire consists of a 17 in. length of 150 lb. copper wire with flattened ends $\frac{5}{32}$ in. wide and 46 mils thick. The tape, which is $8\frac{1}{2}$ in. long, $\frac{5}{32}$ in. wide by 14 mils in thickness, is tightly lapped round the line wire by hand, the use of binding-in pliers not now being permitted. The tape prevents chafing due to the swinging of the wires under the influence of wind. In the event of the line wire breaking in the span the binder holds the wire quite securely, and prevents it from

running back. The first two turns of the binder round the line wire and tape are formed by the round portion of the binder.

Bronze wires, 40 lb. and 70 lb. are bound in with a bronze binder No. 1, and bronze tape No. 1, the binder consisting of a length of 70 lb. wire with flattened ends similar to that illustrated in Fig. 688.

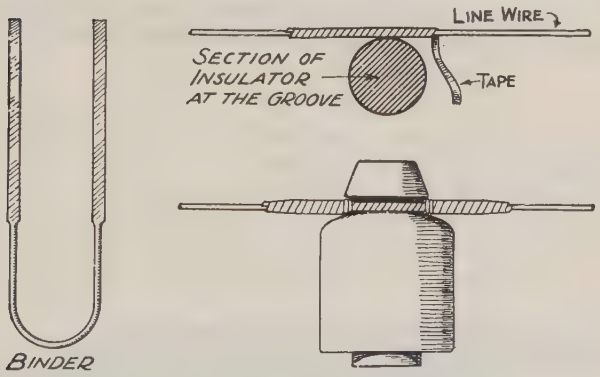

FIG. 688. METHOD OF BINDING-IN COPPER WIRES, TAPES, AND BINDERS

For 150 lb. bronze a 150 lb. binder (No. 2) and a bronze tape (No. 2) are employed.

Cadmium-copper is dealt with similarly, but the binder and tape used for both 40 lb. and 70 lb. gauge are of cadmium-copper of the same dimensions as those used for bronze wires.

It need only be added that in particularly exposed situations, the binding in of copper wires is reinforced by a cross binding of .150 lb. copper wire. The wire forms two complete turns round the insulator, the turns crossing over the tape at the front and terminating in a tight twist of 7 or 8 turns at the centre of the binder at the back of the insulator. The reinforcement turns also serve to clamp the binder in position at the

back since one turn is above and one below the rounded portion of the binder in the insulator groove.

Joints. Twisted sleeve joints (Fig. 689) are made on cadmium-copper, copper and bronze wires up to 150 lb. weight per mile. The ends of the wires are

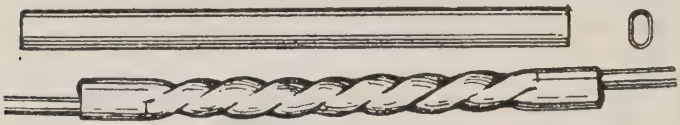

Fig. 689. Copper Sleeve Joint

first cleaned and then placed side by side in a sleeve of the same material as the line wire.

The ends of the sleeve are then gripped by jointing clamps, and one of the clamps is revolved until a certain number of twists are given to the joint. The number of twists depend on the weight or size of the con-

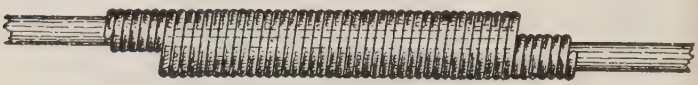

Fig. 690. Britannia Joint

ductors, four turns being given to conductors up to 100 lb. and five for 150 lb. conductors.

A shorter sleeve is also employed for connections where there is no longitudinal stress, e.g. in connecting together the two sides at a termination, or for connecting open and covered wires. The sleeve joint has the advantage that time is saved by the absence of the necessity to solder the joints, and, moreover, there are many occasions when the sleeve joint can be made there and then, and the need for a second visit with soldering tackle thereby obviated.

Joints in larger copper conductors are made with 50 lb. tinned copper wire by a variation of the well-known Britannia joint (Fig. 690), and are soldered

and then black varnished. For 600 lb. wire a length of thinner wire is added to make the joint more solid.

Terminations. The method of terminating bronze and copper wires having a gauge of 150 lb. per mile or less, is shown in Fig. 691. Jointing sleeves of bronze or copper are used, and a loop is made of sufficient dimensions to enable the wire to be lifted off the insulator when the strain of the span is taken off by tension ratchets so that a broken insulator may be changed without interfering with the termination.

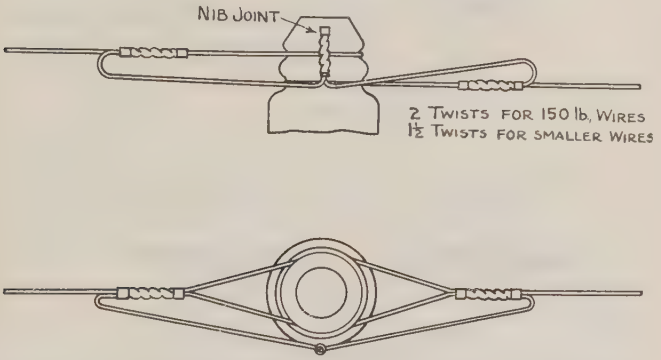

FIG. 691. TERMINATION OF WIRES OF 150 LB. PER MILE AND SMALLER GAUGES

The conductor joint between the two sides of the line wire is made with a nib, i.e. shorter jointing sleeve.

Wires over 150 lb. per mile are terminated as shown in Fig. 692, with 50 lb. copper binding wire, and the joint between the two sides is soldered.

On a pothead insulator (Insulator No. 16 or 17) conductors up to 150 lb. per mile are terminated with a large loop and jointing sleeve, as shown in Fig. 693, with the exception that in the case of 40 lb. bronze wire, the line wire is taken direct into the sealing chamber, the holes of which are plugged before filling with compound. In the case of 70 lb., 100 lb. and

150 lb. wires a short upward turn is given to the end of the line wire and one wire of the I.R.V. core cable is taken out through the sealing chamber and connected to the upturned line wire by a sleeve joint. In order to make an effective sleeve joint a copper tube of suitable diameter (packing sleeve No. 2 or No. 4) is first slipped over the 40 lb. conductor. Larger conductors are terminated in a similar manner to Fig. 693,

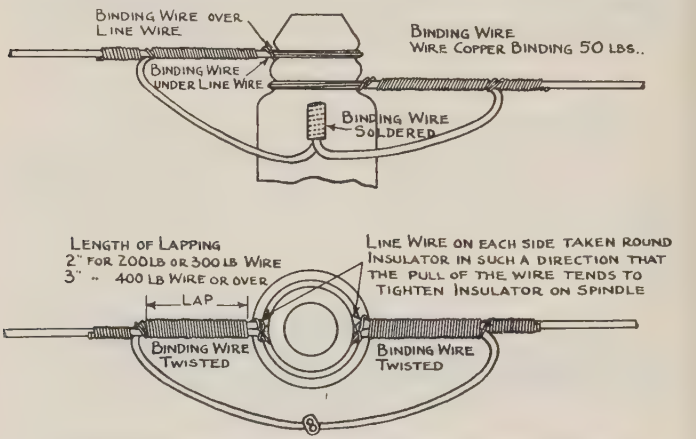

Fig. 692. Terminating Heavy Gauge Copper Wires

except that the upturned end of the line wire is soldered to one wire of the I.R.V. cable, instead of being connected by a sleeve joint.

Earth Wiring. This has two purposes, firstly, as a lightning conductor and, secondly, to prevent any current leaking from a telegraph circuit via the insulators and arms on to a trunk telephone circuit. The present practice is to earth-wire every tenth pole on main lines, all distribution or terminal poles and all poles in exposed situations subject to lightning storms. A 150 lb. copper wire is fitted towards the back of the pole and is connected by soldered joints to the earth wire of each arm carrying telegraph wires.

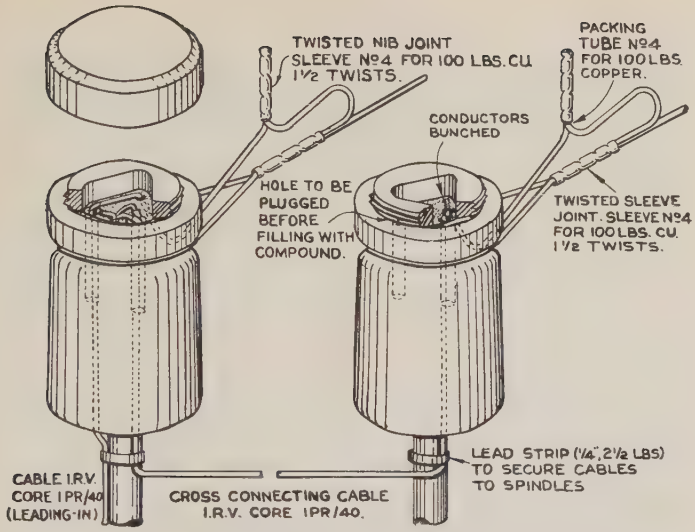

FIG. 693. POTHEAD INSULATOR TERMINATION

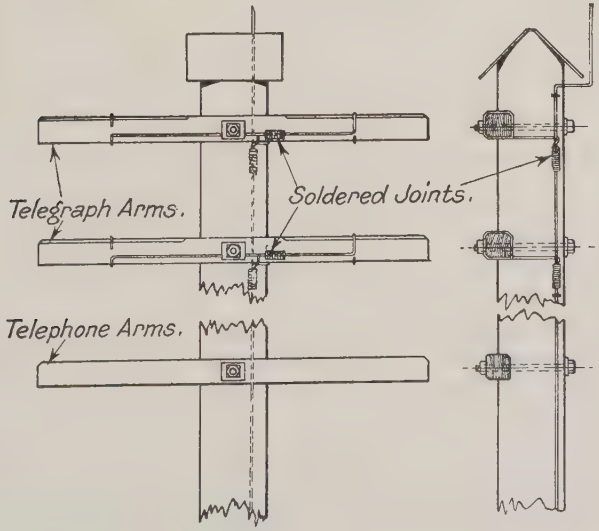

FIG. 694. EARTH WIRING OF POLE

The upper end of the wire projects above, but should not make contact with, the pole roof. It acts as the point of the lightning conductor, whilst the remainder of its length is stapled down the pole to the butt, on the bottom of which it is stapled in two or three turns in the form of a volute. In all ordinary soils this provides a sufficiently good earth for the purpose, but in rock, or upon viaducts, it is better to omit the earth wire unless a special wire well earthed at the ends of the sections is provided for linking up the whole of the earth wires.

The poles are grooved to receive the wire for at least 8 ft. above the ground-line, and the wire is heavily stapled, thus rendering it difficult for it to be stolen.

Dimensions of Poles. The length of the poles required to erect a given line is determined by the obstructions encountered *en route*, but with the qualification that the lowest wire upon the line, when carrying the maximum number of wires for which it is designed, shall not be less than 12 ft. from the ground at the centre of the span upon high roads, nor less than 18 ft. across field entrances, 20 ft. at road-crossings, and 22 ft. over railway lines. In villages or small towns the lowest wire should be given a greater elevation in order to secure immunity from wilful damage, and also to keep the wires above the top windows of the houses which they pass. It is therefore necessary to determine the number of wires which the line will ultimately carry in order to decide the height of the timber.

The diameter of the pole is determined by its length and the maximum wind pressure to which the structure, with its ultimate number of wires, is likely to be subjected.

The factor of safety for poles is 4, i.e. the load applied must not exceed one-fourth of the ultimate breaking stress. In order to meet the varying requirements three classes of pole are used, known as light,

medium, and stout poles, in various lengths, from 16 ft. to 80 ft. The type to be used is fixed by the *ultimate* number of wires which the line will be required to carry after allowing for the effect of wind pressure on the poles applied 2 ft. from the top with the pole buried 5 ft. in the ground. Calculated for a gale of 80 miles per hour, with a pressure of 17 lb. per foot of flat surface, the safe loads for each class of pole, with a factor of safety of 4, are as follows—

Light poles	160 lb.
Medium poles	320 lb.
Stout poles	640 lb.

The static stresses on an open line are due to the weight of the line wire on straight sections of line. This operates in a vertical direction and even when the wire is heavily coated with ice, the effect is negligible. At angles in the line the horizontal stress is taken by stays and the angles result only in an increased downward force on the pole.

The kinetic stresses on the line are due to the action of wind on wires and poles. Two kinetic and one static stress conditions are considered—

(i) A wind of 80 miles per hour with no ice accumulation.

(ii) A wind of 50 miles per hour with an ice accumulation of ·25 in. radial thickness.

(iii) An ice accumulation without wind.

Condition (ii) is that prescribed by the Electricity Commissioners for low tension overhead power lines.

The wind pressure on wires may be calculated from the formula $P = KV^2D$, where P = wind pressure in lb. per foot run of wire, V = wind velocity in miles per hour, D = diameter of line wire, and K is a coefficient depending on the values of the product of V and D.

A few examples of the value of K are given below for calculating wind pressures at 80 miles per hour on bare wires. When the wire is ice coated to a total

diameter of ·25 to 1 in. and the wind velocity is in the region of 50 miles per hour, the value of K may be taken as ·00025.*

LINE WIRES UNDER STORM CONDITIONS

Condition	Cadmium Copper or Bronze			Copper		
	40 lb.	70 lb.	150 lb.	100 lb.	150 lb.	300 lb.
Factor of safety of wire in still air with no ice load at 20° F.	3·18	3·16	3·07	4·4	4·4	4·22
Value of K for bare wire wind 80 m.p.h.	·000209	·000217	·000232	·000225	·000232	·00024
Wind pressure per foot on bare wire wind 80 m.p.h. (lb.)	·067	·092	·144	·114	·144	·211
Factor of safety of wire at 20° F. wind 80 m.p.h.	2·19	2·35	2·53	2·54	2·67	2·94
Load lb./ft. to bring wire to elastic limit	·122	·214	·360	·185	·274	·504
Load lb./ft. with ·25 in. radial ice accumulation wind 50 m.p.h. 20° F.	·358	·371	·396	·369	·396	·434
Diameter of ice (inches) accumulation to bring wire to elastic limit. No wind 20°F.	·63	·83	1·21	·78	·94	1·28

The dimensions of a 30 ft., 40 ft., 50 ft. and a 60 ft. pole of each class are shown below, but for special purposes, somewhat stouter poles termed "extra stout" poles are used, e.g. terminal poles (Fig. 679).

Length of pole	Sizes of light poles.			Sizes of medium poles			Sizes of stout poles		
	Diameter at top		Minimum diameter at 5 ft. from butt end	Diameter at top		Minimum diameter at 5 ft. from butt end	Diameter at top		Minimum diameter at 5 ft. from butt end
	Minimum	Maximum		Minimum	Maximum		Minimum	Maximum	
ft.	in	in.	in.	in.	in.	in.	in.	in.	in.
30	5	6	7¼	6	7½	8¾	7½	9½	10¾
40	5	6½	8	6	7½	9¾	7½	9¾	12
50	5¼	7	9½	6½	8¼	11¼	7¾	10¼	13¾
60	–	–	–	7	8¾	13¼	8	10½	15½

* In calculating the effect of wind pressure, the maximum stress exerted on the pole is the vector sum of the weight of the wire plus any ice loading and the wind pressure on the total diameter of the wire, since these two forces are at right angles to each other, i.e. $\sqrt{(\text{weight})^2 \times (\text{windage})^2}$.

NOTE.—The horizontal stress W in cwt., which must be applied at the resultant point upon a pole in order to break it—

$$W = 54{\cdot}66 \times r^3 \div l.$$

Where r = radius of pole at the ground line and l = height of resultant above the ground line, both in inches. The point at which a pole will actually break is determined solely by the relative diameters of the pole at the resultant and at the breakage point. This point is where the diameter of the pole is $1\frac{1}{2}$ times that of the resultant and for long poles is some considerable distance above the ground line.

The wire carrying capacity of pole routes (unstayed) at a Factor of Safety of 4 without ice accumulation with wind velocity 80 miles per hour, is as under—

Class of Pole	Length of Span Yards	Cadmium-Copper or Bronze		Copper	
		40 lb.	70 lb.	150 lb.	400 lb.
Light	70	12	9	—	—
Medium	65	25	18	12	—
Stout	55	—	42	27	16

In towns or sheltered localities the number of wires carried by a pole may be doubled.

Main lines are constructed with an average span of 55 yd. with an A-pole at every fifth pole. The maximum capacity of such a line is 48 wires if the majority of the wires are of medium gauge. In extremely exposed positions where ice accumulations frequently occur, the span may be reduced to 30 or 40 yd.

On subsidiary lines, the capacity of a medium pole route is taken as 24 for 150 lb. or 40 for 40 lb. wires with 65 yd. spans. In urban areas, staying facilities may not be obtainable, but this is largely balanced by the protection from wind pressure afforded by the adjacent buildings, and in general the figures given need not be reduced.

Depth to which Poles are Buried. In ground of ordinary character poles are buried to a depth equal to one-fifth of their length, subject to the qualification that no pole shall be buried less than $3\frac{1}{2}$ ft., nor more than 8 ft. In loose ground some extra depth is given, whilst in rock cuttings and ground where blasting is necessary the depth is reduced by 1 ft. Again, it may in special cases be necessary to set the poles in concrete. The pole should be buried to the minimum depth which will ensure that it will not be pulled over by the wires, and that in the event of an extraordinary stress the pole will be held by the ground until the breaking-point is reached.

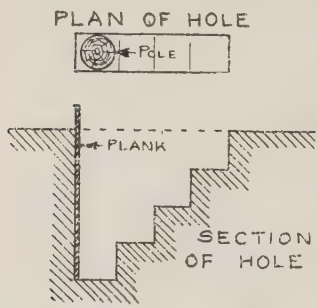

Fig. 695. Plan and Section of Hole

The pole-holes, which should be made as narrow as possible and stepped as shown in Fig. 695, are dug in the line of the wires wherever possible in order that the pole may be bedded against solid earth, for no matter how thoroughly the earth which has been removed is punned when replaced it is never as solid as that which has remained undisturbed. In normal circumstances there is little or no tendency for the pole to move in the direction of the length of the wires, whilst there is only the rigidity of the earth in which the pole is buried to prevent its rocking laterally due to wind-pressure.

In marshy ground it is advisable to fix a block of wood at the butt in the same manner as with strutted poles. In some cases the pole is blocked at the base and also just below the ground line, large stones frequently being added in order to increase the bearing surface. Stay blocks secured to the pole by arm bolts are used for this purpose. They should be fitted upon

opposite sides of the pole, the upper block being placed upon the side towards which the pole is likely to be displaced as the result of lateral stress due to the wires forming an angle at the pole or produced by prevailing winds. The lower block prevents the pole from sinking, and at the same time keeps the base of the pole immovable owing to the comparatively large area which it offers to movement through the soil. In similar manner the upper block prevents movement at that point, so providing the rigid structure which it is the prime object of all good construction to secure.

For the construction of minor subscribers' lines with an ultimate capacity of 16 wires, an adjustable earth auger capable of boring a hole $3\frac{1}{2}$ ft. deep, from 5 in. to $8\frac{1}{2}$ in. in diameter, has been introduced.

Lagging. Newly creosoted poles frequently exude a quantity of creosote after their erection, and in order to prevent it from flowing on to the pavement a depressed space is left around the base of the pole to allow the creosote to sink into the earth. In some cases it is also desirable to fit wooden laths around the lower part of the pole in order to obviate any risk of damage to the clothes of persons using the road, but the lagging is, of course, removed immediately the creosote has dried. Where necessary, this lagging may, however, in good class residential districts, be suitably painted to improve the appearance of the pole.

Stays. At angles in the line the poles are subjected to a lateral stress tending to pull the pole over in the direction which would eliminate the angle. These stresses are preferably counteracted by stays. The stay wire is either 4 or 7 strands of No. 8 galvanized iron wire except on minor lines where one or two 400 lb. G.I. wires are used for lateral stays. The breaking weight of 400 lb. G.I. is 10·7 cwt. $\frac{1}{4}$ strand, 53 cwt. and $\frac{7}{8}$ strand 90 cwt.*

* Although the wire is generally described as iron, it is actually a mild steel.

If the stay crosses over a power circuit, stranded stay wire covered with P.B.J. insulation (see page 899) is employed, but every endeavour should be made to avoid such cases.

The efficiency of a stay is in proportion to the length of the spread, and the stay has to bear the least stress when it makes an angle of 90° to the pole. To obtain a very wide angle would entail the use of a considerable length of stay wire, and it would therefore be more economical to provide two stays making a smaller angle with the pole; for ordinary lateral

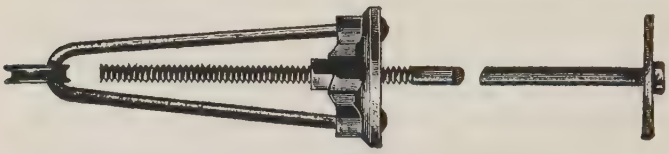

Fig. 696.—Stay Rod and Bow with Ratchet Nut

stays the spread should not exceed half the height of the resultant.

The function of the stay rod and bow is to connect the stay wire to the buried stay block, and to provide a means of adjusting the tension upon the stay wire. The upper end of the rod (Fig. 696) is provided with a screw thread and nut, which latter normally holds the stay bow in position. The stay wire is passed round the thimble upon the stay bow and spliced, and the nut is then tightened by means of a spanner. In order to prevent the nut from untwisting and so allowing the stay to become slack the base of the bow and the nut are cut so as to form a ratchet.

The rods are made in three sizes, viz.—

	Breaking weight
No. 1.—6 ft. long and $\frac{5}{8}$ in. in diameter	95 cwt.
No. 2.—8 ft. ,, $\frac{3}{4}$ in. ,,	142 cwt.
No. 3.—8 ft. ,, 1 in. ,,	260 cwt.

The No. 1 size is used with a single $\frac{4}{8}$, No. 2 with a single $\frac{7}{8}$, and No. 3 with double $\frac{7}{8}$ stay.

The stay rod (No. 4) used on minor lines consists of a $\frac{1}{2}$ in. rod $3\frac{1}{2}$ ft. long terminating in a plain welded eye for the attachment of the stay wire and fitted with a nut and washer at the other end, no tightener being provided. Angle stays are fitted 3 ft. from the top of the pole, and consist of one or two G.I. wires—$\frac{4}{8}$ wire is used for terminal stays.

The stay rod is passed through a hole in the centre of the stay block, which consists of a creosoted block of redwood of one of the three sizes detailed below—

Light	24 in long	× 10 in. breadth	× 5 in. thick
Medium	36 in. „	× 9 in. „	× $4\frac{1}{2}$ in. „
Heavy	42 in. „	× 10 in. „	× 5 in. „

The large square washer which is placed between the bolt-headed end of the rod and the stay block serves to secure a satisfactory bearing surface against the wood. Without this washer the rod would, in course of time, work its way through the block. The washer is secured by a coach screw.

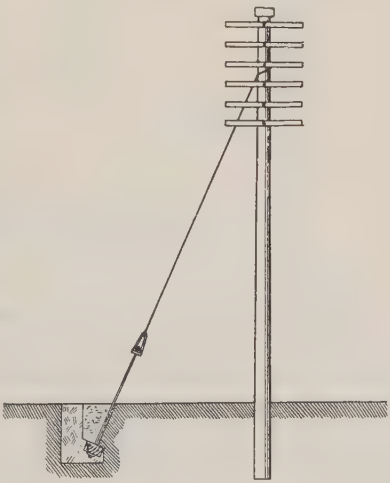

Fig. 697. Pole and Stay

The stay blocks are buried to a depth of from 3 ft. to 6 ft. according to the nature of the ground and the stress to which the support will be subjected, but only stays upon very light lines should be buried to the minimum depth.

The stay hole (Fig. 697) should be undercut, and a slot provided to allow the rod to come into line with the stay should be as narrow as possible. In this way a bedding of solid earth for the block to pull against is

secured, and, in ordinary circumstances, there is little chance of the stay being drawn or uprooted.

In rock a hole is sometimes drilled and an eye bolt leaded into it. The bolt is connected to a stay tightener with a ratchet lock nut.

Where one stay is sufficient to take the stress exerted upon a pole this stay should be fixed at the centre of the stresses produced by the wires, or at the "resultant point," as it is usually termed. There will then be little or no tendency for the pole to buckle.

The stay should act directly against the force

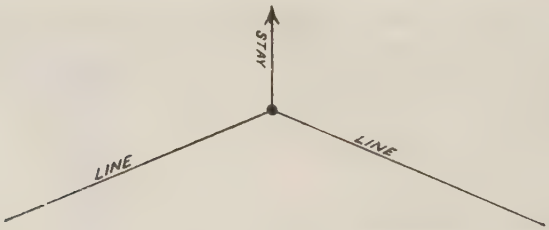

Fig. 698. The Stay Should Bisect the Angle Formed by the Wires

exerted by the wires, and should bisect the greater angle made by the wires (Fig. 698).

The screw thread of every stay rod should be kept coated with a mixture composed of 45 parts of tallow, 45 parts of coal-tar, and 10 parts of mineral pitch, in order to prevent its destruction by rust.

When stays are fixed upon the grass margin of a road, in the line of the kerb, or in other comparatively open positions, a stay guard, consisting of a 6 ft. length of half-round timber with the round side outwards, is lashed to the stay rod with G.I. wire, the flat side of the guard being recessed to receive the bow whilst the upper end finishes in a point.

Where two stays are required on account of the heavy stress, they should be fixed at equal distances above and below the

resultant point, as indicated in Fig. 699. In this case a "V-stay" is shown, whilst in Fig. 700 two parallel stays are depicted. The former arrangement is to be preferred where the line carries its full capacity of wires.

The stay rod is provided with two thimbles and each stay wire is made off separately, a tightener being included in the upper wire to enable the two stay wires to be adjusted to equality of tension. When such a stay is fixed upon grazing land the two wires should be secured together at least 8 ft. above the ground, so as to make it impossible for the animals

Fig. 699. Pole with **V**-stay

Fig. 700. Parallel Stays

to wedge their heads in the angle formed between the two sides of the stay.

The advantage of parallel stays lies in the fact that the second stay may be added without touching the first. Thus, in erecting a new line to carry two arms immediately, and, say, eight arms ultimately, the first stay would be fixed in the position which it should occupy when the line is full. When the need for the second stay arises due to the addition of arms it may be fitted without in any way interfering with the first.

With parallel stays care must be taken that the stays are accurately parallel, since nothing more unsightly than stays at differing angles to the pole can readily be imagined. This remark does not apply to a **V**-stay, since the line of the rod bisects the angle made by the two sides of the stay. If a

V-stay is inadequate then parallel stays are used, but never a combination of a **V**-stay and a single stay.

The method of fixing the stay to the pole is to take the end of the stay wire twice round the pole, and to "make it off" upon itself. The first turn round the

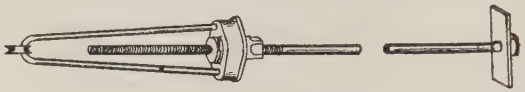

Fig. 701. Bullers' Stay Rod

pole should be parallel with the ground line, while the second turn should come downwards in the direction of the stay. Where the two sides of the wire cross at the back of the pole a single staple is put over both.

The same form of splice is made at the stay bow and at the pole. The loose end of the stay is unstranded,

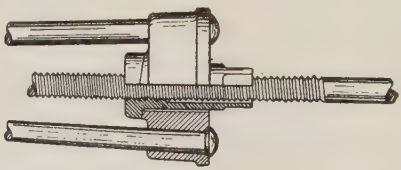

Fig. 702. Sketch of Bullers' Stay Bow

and the wires placed symmetrically around the part of the stay wire to which it is to be spliced. Each wire is successively bound round the stay.

1st wire	8	laps around main,	binding in	6	loose wires	
2nd ,,	8	,,	,,	,,	5	,,
3rd ,,	7	,,	,,	,,	4	,,
4th ,,	7	,,	,,	,,	3	,,
5th ,,	7	,,	,,	,,	2	,,
6th ,,	6	,,	,,	,,	1	,,
7th ,,	6	,,	,,	,,	–	,,

The length of the completed splice is about $8\frac{1}{2}$ in. For $\frac{1}{8}$ strand the four wires should make 8, 8, 7, and 7 laps respectively.

The nut of the ordinary stay rod is somewhat

inaccessible, and to avoid this difficulty Bullers have introduced the modification shown in Figs. 701 and 702. The stay is tightened by turning the square head

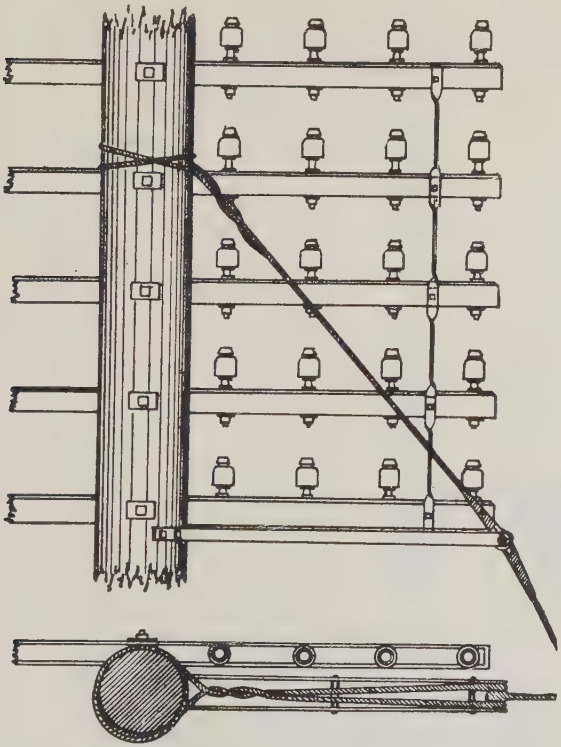

Fig. 703. Stay Crutch

formed below the bow—the usual ratchet arrangement also is provided to prevent untwisting.

In no circumstances should a stay wire approach within 3 in. of any line wire, and where the circumstances are such that this clearance cannot otherwise be obtained a G.I. stay crutch of the form shown in Fig. 703 is used.

Stays Crossing Power Circuits. It is sometimes essential to fix a stay which crosses a power line and in this case, strand stay wire covered with P.B.J. is used. The covered strand is passed round the pole at one end and the thimble of the tightener at the other. The end plus a length of six inches of the main strand is stripped of insulation and the ordinary bare wire make-off completed. The make-off is then painted with J-paint which is allowed to dry. A serving of adhesive insulating tape is then applied, and after this two wrappings of absorbent thin hemp twine painted with J-paint.

FIG. 704. A STRUTTED POLE

Struts. A stay may be defined as a support which is subjected to tensile stress, whereas a "strut" is primarily designed to withstand a compressive or crushing stress. When erected in the manner to be described a strut will also act as a stay and serve to steady the pole. Struts are, however, inefficient as well as costly, and their use is restricted to cases where no other arrangement is possible. Generally, they are fitted below the arms.

The strut (Fig. 704) consists of a pole of somewhat lighter character than the pole to which it is to be fitted. The upper end of the strut, which should be at least $\frac{1}{2}$ in. thick at the tip, is carefully scarfed to fit the pole, and a bolt (with nut) passing through both secures it in position. The pole itself should upon no account be cut to receive the strut, because, by doing so, it would be weakened at the very point where considerable strength is needed. The cut end of the strut should be painted with tar and creosote—a remark

which applies to every cut of every description which is made in a pole, whether for scarfing, arming, or other similar purpose.

At a suitable point the pole and strut are rigidly connected together by a bolt and a length of 1 in. wrought-iron tubing. The bolt passes through the strut, spacing tube, and pole. The spacing tube banks against washers upon the underside of the strut and pole, thus preventing the tightening of the bolt from buckling, or tending to buckle, the strut.

At each side of the pole a galvanized iron washer $3\frac{1}{2}$ in. by $3\frac{1}{2}$ in. by $\frac{1}{4}$ in. is employed, while the inner side of the strut is built up by means of tapered round washers so as to provide a perpendicular surface for the W.I. tube to bed against. Upon the outside of the strut a rectangular tapered washer, hollowed to suit the round pole, is fitted, and above this a round tapered washer for the nut of the bolt to bank against.

A strutted pole has a tendency to lift out of the ground by the sinking of the strut, and, in order to prevent this, the pole and strut are cut to receive a couple of stay-blocks, which are secured to them by $\frac{5}{8}$ in. bolts and nuts.

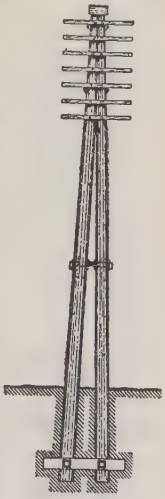

Fig. 705.
An A-pole

A-Poles. For heavy stresses where a stay cannot be fixed A-poles (Fig. 705) are frequently employed. A long scarfed joint is made, and the two poles secured by a couple of $\frac{5}{8}$ in. bolts, a tie-rod and tube, and a wooden block brace or transom. The poles are each reduced by not more than one-third of their diameter, and the cuts are covered with tar and cresote, so forming an air and water-tight joint and thus preventing premature decay. The tie-bar and tube are fixed half-way down the pole, two round washers

being used at the ends of the tube and two hollowed tapered washers against the outsides of the two poles. The transom consists of a block of cresoted wood, 7 or 8 in. square and of suitable length. This produces an extremely rigid structure, the efficiency of which is still further increased by the bracing effect of the arms which are each secured by two arm bolts, one through each pole. In very exceptional cases it may be advisable also to block the poles at the base and ground-line in the manner described in the case of poles in soft ground (page 1082). In ordinary circumstances the space between the two poles should be about 12 in. at the ground-line, with a scarfed joint 8 or 12 ft. long.

Fig. 706.
An H-pole

With A-poles the gradually increasing width of the poles as arms are added fixes a limit to the number of wires which the poles will carry, but this difficulty is frequently minimized by the use of 57 in. arms. One earth wire only is required, and this is fixed in the least conspicuous position. The A-pole is roughly five times as strong as a single pole to lateral stresses.

H-poles. The H-pole for six-wire arms. The poles (Fig. 706) are connected by tie-bolts and spacing tubes together with truss-rods and rings. The object of the arrangement is to secure rigidity, and convert what would otherwise be two independent structures into the equivalent of a lattice girder. The arms each carry six wires, two of which are placed between the two poles. It should be noticed that the lowest tie-bar is connected with the wooden cross-piece, notched at least 6 in. in at the base of the poles, and that the top tie-bar is provided with large washers to prevent the top truss rods from damaging the poles by abrasion, consequent upon slight lateral motions under wind stress. Two earth wires are invariably fitted, one upon each pole.

H-poles are less efficient and more costly than A-poles ; no new ones are likely to be erected.

Saddle Wire. Many lines carry a " saddle " wire supported upon an insulator of the ordinary double-shed type. The arrangement is illustrated in Fig. 707 ; but in this case the saddle is fitted with a " saddle stay " to prevent canting. This addition is, however only necessary at angles in the line.

The pole roof employed is of the " cut " type, and is secured by two $3\frac{1}{2}$ in. coach screws and two 3 in. nails, which also hold the saddle. At the sides of the pole two hardwood wedges are used for the galvanized hoop-iron saddle stay to bed against. The stay is secured to the pole by two coach screws, one upon each side of the pole.

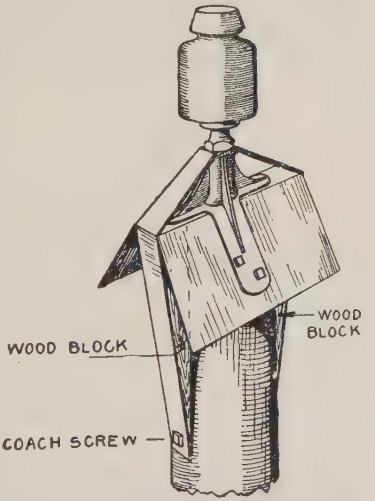

FIG. 707. A SADDLE FITTED WITH A STAY

Pole Steps. In order to avoid the use of very long ladders and to save climbing it is usual to fit pole steps upon all long timber. Generally, the lowest step is fixed 24 ft. from the ground, so as to render them inaccessible to mischievous persons. The method of fitting the steps will be apparent from a consideration of Fig. 699, three coach screws being employed for securing the steps to the pole. The distance between the steps upon each side of the pole is 2 ft. 6 in., and between two consecutive steps upon opposite sides of the pole 15 in.

ERECTION OF A POLE

The top end of the pole is raised from the ground on to a trestle, often formed by two crossed arms connected together with an arm-bolt at their centres and with a suitable length of spliced wire at their lower extremities. The notches for the arms are then cut in the pole, and the arms fitted with the utmost care. After the preliminary fitting, the arm is removed and the notch well painted with tar and creosote. When all the arms have been permanently fitted the pole is earth-wired and the pole-roof fixed. While this work has been proceeding the hole will have been dug, and all the members of the party are then employed to raise the pole from the trestle, and the

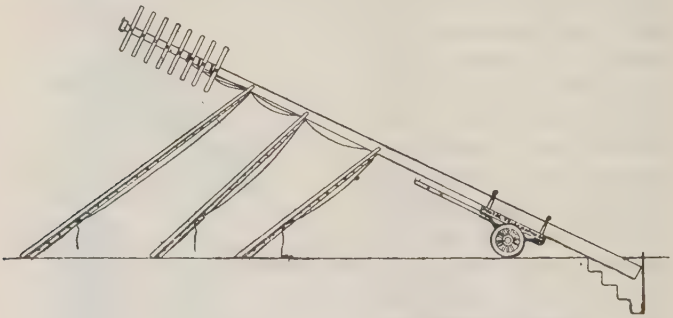

Fig. 708. Erection of a Pole with Ladders

pole-cart is run in beneath the pole from the end of, and in the direction of the length of, the pole. The pole is then balanced upon the cart, and is wheeled along to the pole-hole, where the butt is lowered against the heavy wooden plank (see Fig. 695) which is placed against the end of the hole. This completes the first stage of the work.

A suitable number of thin cords or ropes, termed sashlines, are next fitted to the pole (Fig. 708). A short ladder is then placed under the pole, and the end of one of the lower sashlines is tied to a rung in order that the ladder may not fall when it is raised from the ground prior to taking a fresh position upon the pole. The ladders are provided with spikes to prevent the ends slipping along the ground when the weight of the pole is encountered. Both ends are equipped with a wire rung at the top and bottom consisting of four 400 lb. G.I. wires stretching between the sides. The pole steps fitted upon nearly all long and heavy poles also serve to prevent any

possibility of the ladders slipping upwards. Where there are no steps it is sometimes advisable to fix a few upside down, say 4 ft. apart, when erecting very heavy poles.

The pole is raised a short distance by the first ladder and a second is then inserted. This ladder takes the weight whilst the first ladder moves to a new position. In a similar manner additional ladders are introduced until finally the pole is vertical. The number of ladders employed, like the number of men, varies with the weight and position of the pole. For very heavy timber ten to fourteen men should be employed. The foreman of the party directs the operations and ensures that only one ladder shall be altered in position at one time.

It should be pointed out that, during the earlier stages of the erection of the pole, the ladders should be splayed out upon each side of the pole so as to prevent the pole from falling laterally. In the later stages the sides of the hole into which the butt sinks deeper and deeper serve to prevent a lateral fall ; but in all cases of doubt guy lines should be used with men stationed several yards away.

When the pole is up it is either strutted by a ladder banked beneath an inverted pole step or stayed with a rope connected to a crowbar driven into the ground. The pole is next turned so that the arms are in the correct direction. This may be accomplished by means of an endless loop of wire passing over a coach-screw driven into the pole and a crowbar as lever. A special tool has, however, been designed to meet this requirement.

The pole is carefully packed with large stones at the sides, and the earth is shovelled into the hole in small quantities, and is thoroughly punned. This operation is of the utmost importance, for upon it largely depends the future security of the line. The pole hole should always be as small as possible, and where the pole will be subjected to lateral stress it should be given a set such that the stress will bring it to the vertical, but upon no account should the set exceed the amount necessary for this purpose.

Pole-lifters only, are used for light and short poles, whilst a combination of lifters and ladders is employed for heavier poles. The lifters consist of light ash poles, 10 to 16 ft. long, fitted with handles and furnished with a double-pronged fork at the upper end. This fork is thrust into the pole to be erected, and the lifters are used in a manner identical with that previously described in the case of poles erected with the aid of ladders.

Use of Derrick. Where the pole is of a long and very heavy character, or where the position in which it is to be

placed is an awkward one, the method previously described may be quite unsuitable. Again, it occasionally happens that the pole is too long to be turned round in the road so as to get it into position for erecting in a space, entry, or street, at right angles to the road. There are also cases in which the pole has to be lifted bodily over a wall, building, or other obstruction. These are some of the conditions which render the use of a derrick essential.

In confined spaces, or with very long and heavy timber, the use of ladders is attended with some risk. Should a heavy pole come down, due to the ladders slipping, a fatal accident will almost inevitably result, hence a derrick is used in every case of doubt.

The derrick consists of a short stiff pole, buried to a depth of at least 3 ft., to which an arm is fixed at the top. Above this arm (Fig. 709) a sling-chain is placed round the pole, and to this is attached the treble block end of the main tackle. The pulling end of the 3 in. rope (3 in. is the circumference of the rope) is passed through a snatchblock hooked on a sling-chain at the base of the derrick. In order to prevent this chain from slipping up the derrick when a stress is placed upon the rope, 6 in. spikes are driven into the derrick. A couple of crowbars are driven into the ground and connected so that the rear bar forms a stay upon the forward one. To this a smaller set of luff tackle with 2 in. rope is attached by means of another sling-chain. The double end of the luff tackle is secured to the running end of the main set. The derrick is stayed in at least three, and preferably in four, directions to crowbars driven into the ground. Every hook is moused, i.e. bound across, so as to make it impossible for the chain to jerk out.

The pole is wheeled into position upon the pole cart, and a length of stout timber is placed against the back of the hole for the butt to slide down, and thus avoid it sticking into the ground at the back of the hole. Four sash lines are attached to the upper part of the pole and are used to resist any tendency towards swinging. Finally, the double block of the main tackle is attached to a sling-chain fixed just above the centre of gravity of the pole.

The pole is then reared by pulling the running end of the luff tackle. When the blocks of this tackle come together, the running end of the main tackle is stoppered by means of a length of rope attached to the snatchblock sling-chain. This is accomplished by a very simple yet safe form of tie. The luff tackle is then extended and connected to the main rope close to the snatchblock. In this way the pole is gradually

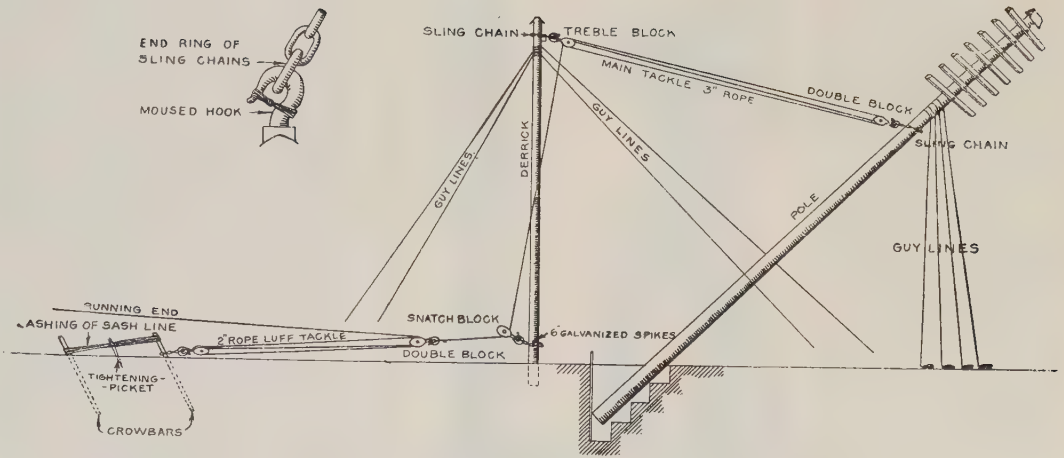

FIG. 709. ERECTION OF LONG AND HEAVY POLES WITH A DERRICK
(It is preferable to fix the Guy Lines above the sling chain)

erected. In some cases a winch may with advantage be employed to replace the direct pull.

During the progress of erection a man is stationed at the hole with a punner or rammer with which the butt of the pole is eased down the plank at the back of the hole. As there is a heavy downward stress upon the derrick, it should rest upon a substantial block of wood when the ground is at all soft.

If the work is carried out with care there is no risk of accident.

Wiring. The operation of running the wires next calls for attention. A coil of wire is placed upon the " drum barrow," which consists of a drum carried by a vertical axis mounted

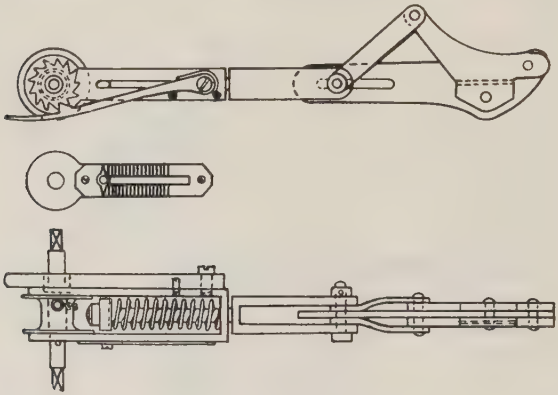

Fig. 710. Ratchet and Tongs No. 2

upon a light form of barrow. A brake is provided so that the revolution of the drum may be checked when necessary. The outer end of the coil of wire is then taken over the arms upon which it is to be erected.

The wire. having been passed over the arms of about eight poles, is then pulled up by hand, the final adjustment being made with the aid of a ratchet and tongs.

The tighter the wire is drawn up the smaller is the sag or dip, and therefore the smaller is the risk of contact. Upon the other hand, the stress upon the wire may be made so great that the wire is liable to break. The ratio between the breaking stress of the wire and the maximum tension to which it is subjected is termed the " factor of safety." The factor of safety is least during very cold weather, when the wire has contracted to the maximum extent, and is greatest during very hot weather.

For straining the wire to the required degree, either tension ratchets and draw-tongs or draw-vices are employed.

The "ratchet and tongs No. 2" (Fig. 710) is used for copper up to 200 lb. gauge and for 150 lb. bronze wire. For 40 lb. and 70 lb. wire a similar but somewhat lighter form is used with correspondingly lower tension values. For the heaviest copper wires the tongs have doubled gripping jaws. Ratchets and tongs without the spring tension measuring device are provided

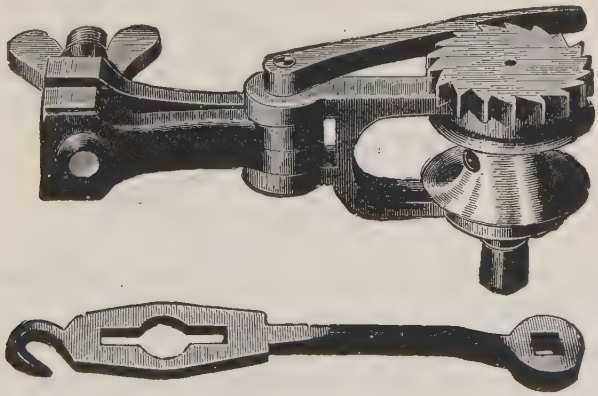

Fig. 711. Steel Draw-vice and Key

where wires have merely to be pulled up to equality of sag with existing wires or with a specially regulated wire.

The steel draw vice (Fig. 711) was used for iron line wires, but it is now more usually employed in tensioning stay wires and other similar purposes.

A length of six-strand steel wire with a globe insulator of a pattern similar to that used on electric tramways terminates in a scissors hook, which is fixed on the insulator spindle, the other end being passed through the hole in the drum of the ratchet. The line wire is gripped about 4 ft. in front of the arm by the tongs. The insulation of the line wire is not impaired by the use of the globe insulator, and it is of great advantage when repairs are being carried out on working wires.

By turning the ratchet-drum the wire is pulled up and the tension indicated upon the scale at the side of the instrument. The process is so obvious that further description is scarcely necessary.

In wiring a new line the top or first wire dealt with is carefully strained by using tension ratchets which have very recently been checked for accuracy. The remaining wires are then pulled up to accord with the first by judging the dip by the eye. In the case of twisted telephone loops the accuracy of the adjustment may readily be judged by observing if the

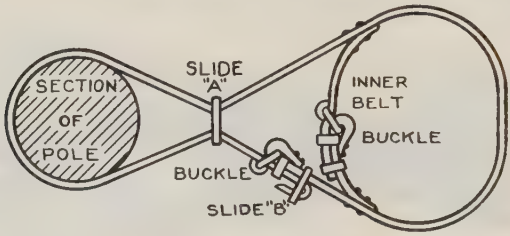

Fig. 712. Safety Belt

two wires of every pair appear to cross exactly at the centre of the span.

Safety Belt. When men are binding in wires, adding arms, or performing any work up the pole, it is essential that the leather safety belt (Fig. 712) should be used to minimize the possibility of accident. Two brass slides are added so that the failure of a buckle may not result in a fall. The belts are treated with neatsfoot oil at regular intervals to preserve pliability. The utmost care should be taken to prevent belts coming into contact with acids or soldering irons when packed in the cart.

Bosun's Chair. Work on the face of high buildings has sometimes to be carried out by suspending the workman in a chair (Fig. 713). It is attached to a 3 in. rope which is protected from chafing where it passes over the parapet of the building by a layer of felt or sacking. The chair is lowered gradually by taking a turn of the rope around a chimney or other stable

structure. In the case of a sloping roof a similar object may be attained by passing the rope round the body of a workman lying on the roof with his feet braced against the parapet. For raising the chair an auxiliary line is provided in order that the man may take his weight off the chair when ascending.

Sags and Stresses. The stress which should be put upon the wires when erected is determined by the

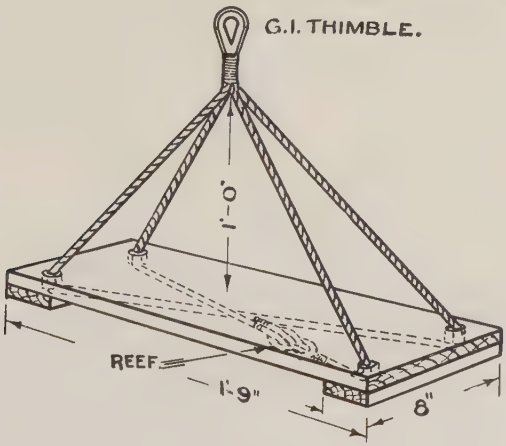

Fig. 713. Bosun's Chair

necessity to avoid liability to breakage of the wire and, on the other hand, to minimize the danger of contacts. The tighter the wire is drawn the smaller is the dip and consequently the risk of contact is less between the several wires. These opposing considerations led to the adoption of the rule that the tension should be such that at low winter temperature, 22° F., the stress should be equal, for copper to one fourth, and for bronze to one-third, of the breaking weight of the wire.

In order to obtain the relations which exist between the stress, length of span and dip, it is necessary to

employ the following well-known theorem in mechanics : *If three forces acting at a point be in equilibrium they can be represented in magnitude and direction by the sides of any triangle which is drawn so as to have its sides respectively parallel to the directions of the forces.**

Let ABC (Fig. 714) represent the parabola † formed by a telephone wire stretched between two supports A and C. From A and C are drawn tangents to the wire which meet at E, DE being equal to twice the dip or sag DB. The stress on the wire is represented by

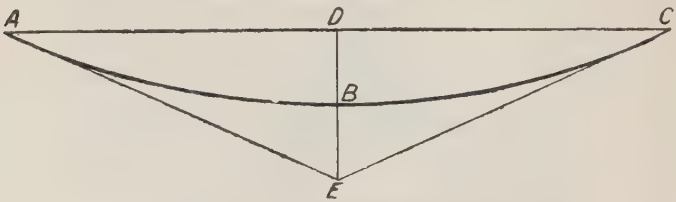

Fig. 714. Line Wire Stress Diagram

AE, whilst AD and DE are respectively the horizontal and vertical components. The vertical component is obviously equal to the weight of half-a-span of wire AB. Calling this $\frac{W}{2}$ it will be recognized that $AE : DE :: S : \frac{W}{2}$ where S is the stress on the wire at A.

But as the curve is extremely flat and DE small AD may be assumed to be equal to AE (actually $AD = \sqrt{AE^2 - DE^2}$). The weight of the wire is equal to the length of the span $AC \times$ weight per unit length,

$$\therefore \frac{l}{2} : 2d :: s : \frac{lw}{2}$$

$$s = \frac{l^2 w}{8d} \text{ and } d = \frac{l^2 w}{8s}$$

* *Elements of Statics and Dynamics*, S. L. Loney, or any other work on mechanics.

† Strictly, the wire hangs in a catenary curve.

where l = length of span in feet ;
w = weight of 1 ft. of the wire ;
s = stress in lb. ;
d = sag or dip in feet.

Example 1. What is the dip on a 150 lb. copper wire erected in a 50 yd. span with a stress of 120 lb. ?

$$d = \frac{l^2 w}{8s} = \frac{150^2 \times \frac{150}{1760 \times 3}}{8 \times 120} = \cdot 6656 \text{ ft.} = 8 \text{ in. approx.}$$

Example 2. What is the stress on a 200 lb. copper wire if the dip is 2 ft. in an 80 yd. span ?

$$s = \frac{l^2 w}{8d} = \frac{240^2 \times \frac{200}{1760 \times 3}}{8 \times 2} = 136 \text{ lb. approx.}$$

Consideration of these relationships will show that (i) with a wire of any given material the stress is directly proportional to the weight per mile ; (ii) the dip of wires of different gauges in a given span varies with the material but not with the gauge ; (iii) that the dip and stress vary inversely ; (iv) that the stress and the dip are each directly proportional to the square of the length of the span.

Since the breaking weight of a wire is roughly proportional to its sectional area, it is also directly proportional to the weight of the wire per mile. Hence the dip of a wire varies with the material of which it is composed, but not with its gauge. This applies to any temperature, so that wires of differing gauges but of the same material may be erected upon a line without risk of contact, since the dip will be the same at every temperature.

The stress which is put upon a wire depends upon the material of which the wire is composed, the length of the span and the temperature. Every foreman is supplied with a thermometer in order that the actual temperature of the wire itself during erection may be accurately known. The length of the span is readily

measured. With this information the stress to be put upon the wire is obtained from tables which have been previously prepared.

The effect of elasticity is that the wire stretches when stress is put upon it, and so the increased tension due to the deposition of ice on the wire is partially compensated by the lengthening of the wire, which reduces the tension. Further, it will be recognized that as the temperature rises the wire expands and the tension is reduced. Consequently the elastic lengthening is reduced proportionately. When a wire contracts, due to the lowering of the temperature, the stress is increased, but this results in the wire stretching so that the alteration in dip is less than it would be were the wire inelastic.

The following factors of safety are adopted—

(i) For copper wire under normal conditions . . .	4
(ii) For copper wire in exceptionally exposed situations .	6
(iii) For cadmium-copper and bronze under normal conditions	3
(iv) Aerial covered wires (copper or bronze J. & P.B.J.) . .	5

When copper and cadmium copper or bronze wires are run on the same line the factors of safety are 3 and 4·5 respectively. So that approximately the same dip is secured for both types of wire at all temperatures.

It may be of interest to indicate how the effects of elasticity and temperature changes may be calculated.

If a wire L inches long having a sectional area of a square inch is stretched e inches by a stress of s lb. it has been proved experimentally that—

$$e : L :: \frac{s}{a} : E, \text{ i.e. } e = \frac{Ls}{aE}$$

E is the modulus of elasticity, and its value is equal to the stress per square inch of the section of the wire which would double its length if its elasticity remained perfect. It will be noticed that for a given length of wire the stretch is proportional to the stress, i.e. $\frac{e_1}{e_2} = \frac{s_1}{s_2}$ where e_1 e_2 s_1 s_2 represent elongations and stresses in the two cases.

The length L_1 of the wire erected in a span of l feet with a dip of d feet is—

$$L_1 . l + \frac{8d^2}{3l}$$

The factor of safety at 22° F. is specified, and this determines the stress at that temperature. The dip is then obtained from $d = \frac{l^2 w}{8s}$. For copper wire the coefficient of expansion k is ·000009 per degree F. Hence the increase in length of the wire from L to L_1 for a rise of $t°$ above 22° F. is—

$$L - L_1 = lkt$$

The change in elastic elongation is $\frac{l}{aE}(s - s_1)$ where s_1 is the new stress at $(22 + t)°$.

$$L - L_1 = lkt + \frac{l}{aE}(s - s_1)$$

The change in dip due to the elongation $L - L_1$ is obtained from

$$L - L_1 = \frac{8d^2}{3l} - \frac{8d_1^2}{3l} = \frac{8}{3l}(d^2 - d_1^2)$$

Suitable tables showing the stresses to be put upon wires have been prepared. It may be said that the dip varies according to the temperature and length of span from a few inches to 3 or 4 ft.—this latter value being exceeded only in the case of very long spans.

The following figures may be useful—

k for iron	= ·0000065	per degree	Fahrenheit.
,, copper	= ·000009	,,	,,
,, bronze	= ·0000092	,,	,,
E for copper	= 14,000,000		
,, bronze	= 17,500,000		
,, iron	= 25,000,000		

Pendulum Method of Measuring Dip. When a span of line wire is set swinging to and fro across the length of the span, it behaves as a pendulum and there is, therefore, in still air, a definite relation between the dip and the time of swing. The dip in inches $D = ·0306t^2$ where t is the time in seconds taken for the wire to make 20 complete swings. This time t varies

from 13 sec. for $5\frac{1}{4}$ in. dip to 49 sec. for $73\frac{1}{2}$ in. It is essential that the wire should swing as a whole and not in sections and that the amplitude of swing should at the start be great enough to give the requisite number of swings before dying out. The wire may be pulled to the side by a rod applied at the centre of the span or the swings may be reinforced by impulses applied by hand at the pole in strict conformity with the rate of swing.

Comparison of the dip obtained from this test with that given in the tables provides a check on the regulation of the wires with good accuracy and avoids the necessity for cutting the wires to insert a tension ratchet.

"Ping Pong" Method of Measuring Tension. A transverse wave is set up at one end of the span by pulling or striking the wire sharply about 18 in. from the insulator. The wave so generated travels to the far end of the span where it is reflected back. This wave travels to and fro along the span and is felt by pressing the fingers lightly on the wire a few inches from the insulator. It can be shown that the tension in lb. $T = \dfrac{4l^2w}{gt^2}$

where l is the length of span in feet.
w is the weight of wire in lb. per foot.
g is acceleration due to gravity, i.e. 32·2.
t is the time in seconds for the wave to travel from its origin to the end of the span and back.

For any given length of span and gauge of wire $4l^2w/g$ is constant and T therefore varies inversely as t^2. Tables have been prepared for various gauges of wire in various span lengths from which T may be ascertained from the observed values of t. It may be added that about 20 complete waves should be counted on end to obtain accuracy.

Stresses on Stays. In order to decide the class and number of stays required, it is necessary to calculate the stresses to which they will be subjected on the assumption that they take up the whole of the pull on the pole. Taking first the case of a terminal pole, the greatest horizontal stress on the pole which can possibly occur is the sum of the breaking weights of all the line wires. For copper wire the breaking weight may be assumed to be three times, and for bronze and cadmium-copper five times, the weight per mile of the conductor. Since the breaking weight of the line wires has been used in the calculations, stays having a breaking weight at least equal to the calculated stress on the stay only need be provided. In effect this secures that the factor of safety on the stay is at least equal to that on the line wires.

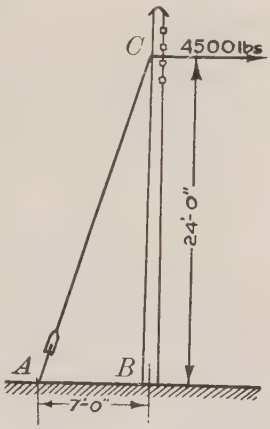

FIG. 715. STRESS ON THE STAY

As an example, assume that a terminal pole carries ten 150 lb. copper wires with its resultant point 24 ft. from the ground and that 7 ft. is available for the spread of the stay (Fig. 715).

The horizontal stress is $10 \times 3 \times 150 = 4500$ lb.

In order to solve this problem the following well-known theorem in mechanics is again required: *If three forces acting at a point be in equilibrium they can be represented in magnitude and direction by the sides of any triangle which is drawn so as to have its sides respectively parallel to the directions of the forces.** From this statement it will be seen that the lengths of the

* *Vide Elements of Statics and Dynamics*, by S. L. Loney, or any other work on mechanics.

three sides of the triangle are proportional to the forces acting in each direction, hence—

$$AB : AC : : 4500 : \text{stress on stay.}$$

Since ABC is a right-angled triangle—

$$AC = \sqrt{AB^2 + BC^2}$$

$$AC = \sqrt{7 + 24^2} = 25 \text{ ft.}$$

$$\therefore \text{ Stress on stay} = \frac{25}{7} \times 4500 = 16{,}000 \text{ lb. approx.}$$

The breaking stress of $\frac{7}{8}$ stay wire is about 10,000 lb.

The force tending to drive the pole into the ground is in the same ratio to the horizontal stress as the

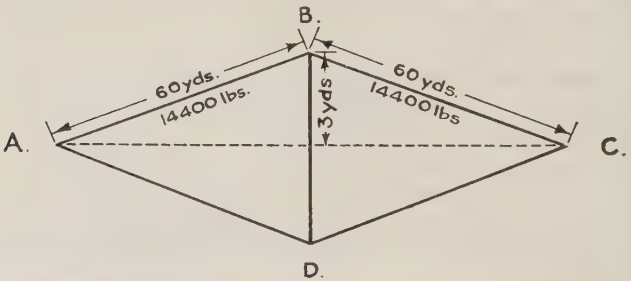

FIG. 716. STRESS ON STAY DUE TO AN ANGLE IN THE LINE

height of the resultant is to the spread. In the above case the force is therefore—

$$\frac{24}{7} \times 4500 = 15{,}400 \text{ lb.}$$

or rather less than the stress upon the stay.

Hence, two $\frac{7}{8}$ stays are required. The second stay would necessarily be placed within and parallel to the first and the stress would be shared equally by the two stays.

In the case of a V-stay properly adjusted the height of the stay should be taken as roughly midway between its upper and lower attachments on the pole.

Where the spread of a stay or stays upon a terminal

pole is made equal to the height at which they are attached, the stress upon the stay is $\sqrt{2} \times$ the horizontal stress.

At every angle in a line the pole at which the angle occurs is subjected to a horizontal stress tending to pull the pole over in a direction which would eliminate the angle. The calculation of the value of this stress is necessary to decide the kind and number of stays required.

The distance which the angle pole is out of line with its immediate neighbours is readily observed or measured, and this, with the length of the span and the number and class of wires carried, provides the information necessary for calculating the horizontal stress at the resultant point.

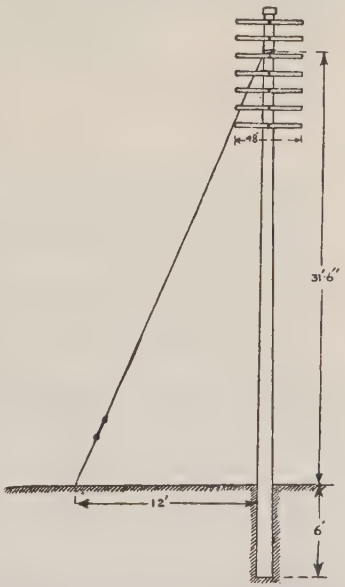

Fig. 717. Horizontal Stress on Pole Due to an Angle in the Line

The solution of this problem again requires the theorem in mechanics: *If two forces, acting at a point, be represented in magnitude and direction by the two sides of a parallelogram drawn from one of its angular points, their resultant is represented both in magnitude and direction by the diagonal of the parallelogram passing that angular point.**

Example. A line of 40 ft. poles carries twelve 200 lb.

* *Vide Statics and Dynamics*, by S. L. Loney, or any work upon mechanics. The theorem may be proved experimentally or theoretically deduced from Newton's laws of motion.

and sixteen 150 lb. copper wires. If the pole at an angle is 3 yd. out of line, the length of the span upon each side being 60 yd., what stays will be required assuming that 12 ft. is available for the spread of the stay ? (Figs. 716 and 717.)

Maximum horizontal stress acting on each side of angle pole—

$$12 \times 200 \times 3 = 7{,}200$$
$$16 \times 150 \times 3 = 7{,}200$$
$$14{,}400 \text{ lb.}$$

The diagonal $BD = 6$ yd.

Since $ABCD$ represents a parallelogram of forces—

Length of AB or BC : Length of BD : : stress AB or BC : stress BD.

i.e. 60 : 6 : : 14,400 : Horizontal stress.

$$\therefore \text{ Horizontal stress} = \frac{6}{60} \times 14{,}400 = 1440 \text{ lb.}$$

The approximate position of resultant point is upon the third arm, i.e. 31 ft. 6 in. above the ground-line.

$$\therefore \text{ Length of stay} = \sqrt{31{\cdot}5^2 + 12^2} = 33{\cdot}7 \text{ ft.}$$

$$\text{Stress on stay} = \frac{33{\cdot}7}{12} \times 1440 = 4044 \text{ lb.}$$

If it is certain that additional wires will not, at any future time, be added to the line a $\frac{1}{2}$ stay would suffice.

Where the two spans upon either side of the angle pole are unequal the semi-diagonal must be measured by taking a point on the longer span equal to the shorter, as indicated in Fig. 718. Here the span is 40 yd. on one side and 60 upon the other. Since the stresses in the two spans are the same, they are represented by AB and BC and not by AB and BE.

Renewals and Alterations. When it is necessary to renew the poles upon a line care must be taken to prevent interruptions to the circuits working upon the route. Extension

arms are clamped to stout ladders placed on each side of the pole and are suitably stayed. The wires are then unbound and placed in slots on the extension arms. If the new pole is to be erected in such a position as to allow the old one to remain until the new pole is erected, the extension arms may be clamped so as to form an extension of the arms of the old pole. This leaves a wide gap between the wires upon either side of the pole, which can then be lowered after the new one has been erected in the ordinary way.

The removal or recovery of poles is now generally performed with a pole jack. A stout chain is placed around the base of

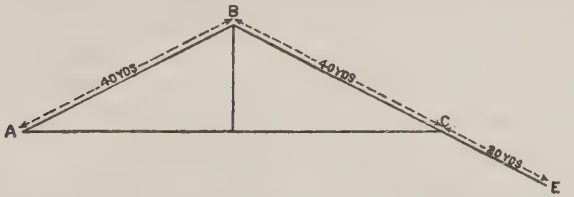

FIG. 718. HORIZONTAL STRESS ON POLE WHEN THE SPANS ARE OF UNEQUAL LENGTH

the pole and over the top of the lifting jack. Operation of the lever gradually lifts the pole out of the ground by a directly vertical pull and thus saves the labour of excavation. It cannot, of course, be employed in cases where blocks are affixed to the pole. The pole is stayed during the operation and is then either lowered gradually or permitted to fall according to the requirements of the situation.

In special cases of difficult and complicated re-arrangements a special cable, termed an interruption cable, is sometimes employed. These cables are slung upon the poles, and the wires to be renewed are joined through the cable before being cut away, and the new wires are cut in before the interruption cable is cut out. If these operations are carefully performed interruptions need not occur—the guiding principle being never to cut any wire until it has been joined through the cable.

In making a diversion of a line between any two points interruptions are avoided by erecting the new section and allowing the wires to work through both the old and the new lines in parallel. Finally the old line is cut away, but this is not done until the circuits are through upon the new section.

Temporary stays are needed while the alterations are in progress and these are usually provided by driving a crowbar

into the ground and connecting it to the pole by one or more 400 lb. iron wires with draw-tongs inserted to tighten the stays.

Surveying. When a new route has to be erected between two given points, the first work to be done is to decide upon the route to be followed—a matter upon which too much thought can scarcely be bestowed. The possible routes can at once be ascertained by consulting an ordnance map, and, other things being equal, the shortest one is chosen. Generally speaking, there are two or three alternative routes which could be used in the case of a long line, and the final decision is very frequently due solely to the facilities which the road offers for the erection of stays and for access by the linemen. Again the probable lateral extensions of the line should receive consideration.

Having selected the route, a detailed survey is made in order to fix the exact positions and lengths of the poles and also to estimate the cost of the work. At the same time the method of laying out the stores and means of cartage are carefully considered. Also, a note is taken of all the wayleave consents which are required. This work should be done with the utmost care, and full notes of the decisions arrived at should be made, so that the foreman entrusted with the work shall have the fullest possible details of the manner in which it is to be carried out. Frequently a considerable period elapses between the preparation of the estimate and the actual carrying out of the work, and therefore the value of accurate and full notes will be quite apparent.

In fixing the positions of the poles it must be remembered that during gales the wires are blown out laterally to a distance almost equal to their dip, and therefore trees must be given a sufficiently wide berth. Where the level of the road changes rapidly it is desirable to keep the height of the line fairly uniform. In any case, the heights of the poles must not vary sufficiently to produce an upward pull upon an intermediate pole. This is readily calculated by working out the dip for a span without the intermediate pole. If this pole is too short to reach the lowest point of the wire then it will be subjected to an upward pull.

Chimneys should be avoided where the wires cross over buildings, as the heat and smoke have a deleterious effect upon the wires. Again, poles should not be placed in positions

in which well-water is likely to be contaminated by the creosote.

Long slanting road crossings should be avoided—in fact, the road should be crossed as seldom as possible, but where a crossing is essential the wires should be terminated at either side.

Where a long stretch of road is visible it is advisable to make the angles between the successive poles and their stays and struts as nearly uniform as possible, since this improves the general appearance of the line.

In order to limit the range of damage due to the collapse of a line, by reason of snow accumulations,

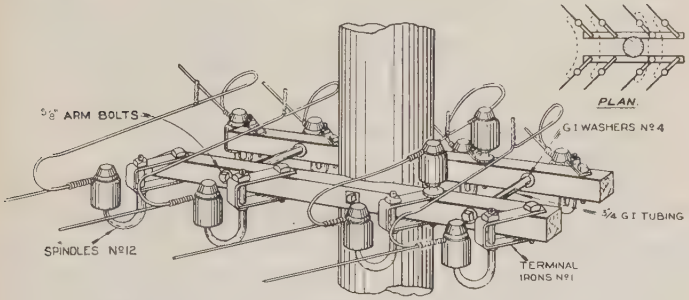

FIG. 719. SPECIAL ARMING AT A HEAVY ANGLE

or the fall of a tree across the line, double longitudinal stays are provided at intervals of about a quarter of a mile. These two stays are fixed in the line of the wires and serve to support the pole should a breakdown occur upon either side. This device is applied wherever it is possible, but unfortunately there are many cases in which the stays would seriously obstruct the road.

A single longitudinal stay is required at points where the wires change in gauge in order to balance the difference in the stresses upon either side of the pole.

In the case of small bends in the line no special provision is necessary, but where the turn is sharp, it is sometimes found that the inner wires in leaving the insulators foul the poles.

On lines carrying wires of over 40 lb. gauge special arming is necessary at heavy angles. The pole is double armed in the line bisecting the angle, and terminal irons No. 1 and

J-bolts are fitted as shown in Fig. 719. The arms are braced together by arm bolts and spacing tubes. The connections between the line wires nearest to the back of the pole are attached to two extra insulators, in order to avoid the possibility of these connections making contact with the pole. It is preferable to use two sets of stays, one set in the line of each set of wires, instead of one set of stays in the line bisecting the obtuse angle formed by the wires.

Right-angle turns on junction routes equipped with 8-way arms are made by fixing two sets of arms at right angles to each other, sufficient space being left between the two sets to provide for the ultimate requirements of the line. The wires on the upper and lower sets of arms are connected together between the pothead insulators by leads run beneath the arms to which they are cleated. The fixing of arms with a 6 in. spacing facing in alternate directions should never be adopted.

A short section of line is diagrammatically shown in Fig. 720. Double longitudinal stays are shown at *A*, while the pole at *C* is strutted, and that at *D* is stayed across the road owing to the owner of the shaded property refusing to permit a strut to be fixed upon his land. It is, in the latter case, assumed that there is no space upon the road for the erection of a strut or an A-pole. A pole is erected upon the opposite side of the road and stayed by a block and rod in the ordinary way. The line pole is stayed at its resultant point to the top of the stay pole, and a tightener inserted for adjustment. Stays erected across roads must, of course, be given sufficient elevation to provide ample headway for heavily-laden hay wagons, etc. If stays, struts, and A-poles are all impracticable the bend may be negotiated by increasing the number of poles round the bend ; but this course is only followed in cases of absolute necessity.

The poles upon each route are numbered consecutively by means of number nails fixed 6 ft. above the ground line in order to facilitate identification for

wayleave purposes and for the issuing of instructions for renewals or repairs.

In some districts heavy winds always prevail in one direction, and where this direction is at right angles to the length of the line it is advisable to add

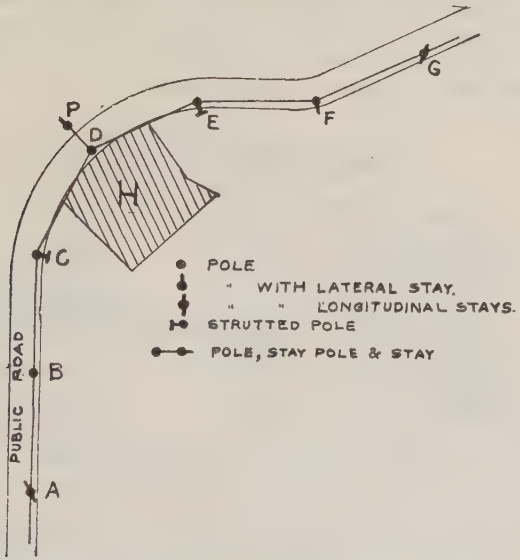

Fig. 720. Plan of Section of Line Showing Various Stays and Struts

lateral stays to provide for the extra stresses which result.

Game guards consisting of cylindrical corks, are occasionally attached to the wires along the span in order to make the wires sufficiently conspicuous for the birds to avoid them.

Facilities for testing purposes are sometimes necessary at the boundaries of spheres of engineering control; and where this position is remote from any office suitable for leading in the wires, a hut containing a test-box is fixed by the pole. In other

cases fuse insulators (Fig. 592) but with short copper tubing to replace the fuses, or a pole test-box, of a simpler form than that shown in Fig. 677, may be used.

Brackets and Bracket Routes. The normal method of running open wires is on poles, but there are cases where from one to four or at the most six wires are carried on brackets fixed to the walls and chimneys of buildings *en route*. Such routes should not exceed

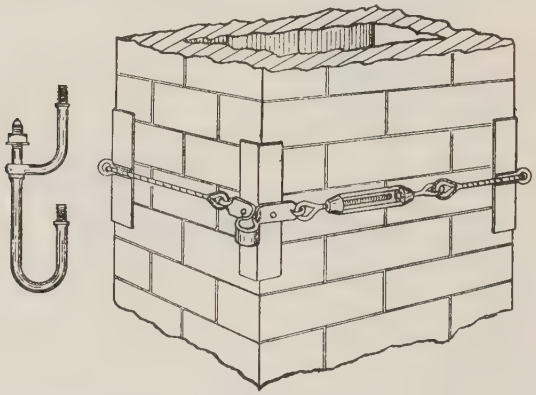

Fig. 721. Chimney Bracket (No. 6) and Fixings (Spindle No. 7)

three or four spans in length. The objection to bracket routes is their relative inaccessibility.

The brackets should only be attached to sound buildings, and a wall is to be preferred to a chimney, but where the latter is the only available position the brackets should be kept as low as possible.

The bracket shown in Fig. 721 is used on chimneys and dispenses with the necessity for nails and plugging of the brickwork—frequently, a hazardous proceeding since most stacks are only $4\frac{1}{2}$ in. brickwork. A 7/14 stranded iron wire is passed around the chimney and secured to the two eyes on the bracket. At each of

the other three corners, the stay wire passes through the projecting eye of an angle plate 9 in. deep in order to distribute any stress and to prevent the wire cutting into the brickwork. A single or double J-bolt may be used as required.

Other types of bracket are used to meet different conditions. For example, a bracket No. 5 may be nailed to the corner of, or if flattened out, may be nailed on to the face of a building if the pull of the wires is directly

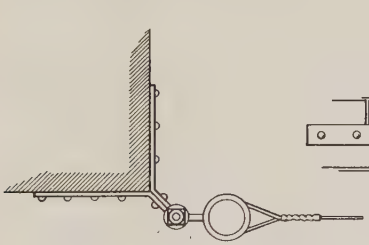

FIG. 722. BRACKET NO. 5 FIXED ON CORNER OF A BUILDING

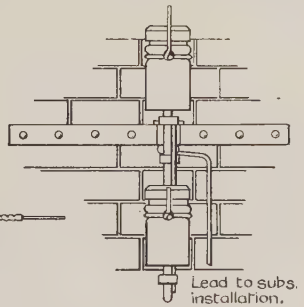

FIG. 723. BRACKET NO. 5 FIXED ON THE FACE OF A BUILDING

on to the bracket (Figs. 722 and 723). Where the pull is oblique a spike insulator No. 1 (see Fig. 686) is used.

Humming of Wires. Silencing Devices. The well-known humming noise which is produced by telephone wires under certain atmospheric conditions is usually of little or no consequence in the case of road lines, but when the wires are carried by supports fixed to buildings, the sound is transmitted by the walls and partitions to the interior. In some cases, no doubt, resonance also tends to increase the noise to such an extent as to cause most serious annoyance. The effect is greatest when the wires are erected in long spans and are tightly stretched, but it is noticeable that the volume of the noise is not in direct proportion to the velocity of the wind, since it is frequently greatest upon a comparatively calm day. Many silencing devices or deafeners of a more or less effective character have been devised.

When the wires terminate upon a support fixed to a building, as for example upon a bracket, the noise can be very greatly reduced by terminating and slackening out the wires in the last span. In addition the line wire may be covered with india-rubber by placing a length of tubing over the wire where it passes around the insulator; or again, a strip of wood about 2 ft. long bound round each wire close to the insulator will sometimes prove quite effective.

The late N.T. Co.'s Standard Arrangement. A narrow strip of thin lead is wrapped around the wire for a distance of 8 in. upon each side of the insulator, the central portion taking one turn around the insulator. Its efficiency may, however, be increased by placing yarn between the wire and leaden wrapping.

Chain Silencer. A short length of chain is inserted in the line wire and the ends are bridged across by a length of conductor so as to preserve the electrical continuity of the circuit.

For Brackets. A rubber washer placed between the flange of the insulator spindle and the top of the bracket, and one between the nut and the bottom of the bracket, is most effective and greatly diminishes the noise.

It has been found that a light stranded copper wire produces much less noise than a solid conductor, and in acute cases $\frac{3}{18}$ stranded copper wire is employed.

Aerial Cable. The principal use of aerial cable is to bridge gaps in a line due to storm breakdowns or during diversions, and in this connection it is generally alluded to as interruption cable. For such temporary work, 8, 12, or 19-pair cable with 20 lb. tinned conductors, insulated with rubber and contained in a rubber sheathing with a protective outer braiding, is usually employed (8-pair 10 lb. conductor cable is also available). The 8-pair and 12-pair cables require one, and the 19-pair cables three steel suspending wires to which the cables are attached by marline loop with steel hooks (Fig. 724) spaced at 20 in. intervals.

For permanent work lead covered paper core cables are employed and are terminated on cable distribution plugs. Such cables differ only from those used on underground routes in size and in the type of lead sheathing, which consists of a lead alloy (1 per cent of antimony being added) which is found to give the

cable a longer life.* So far such cables have been used for carrying wires beneath bridges in cases where excessively high and costly timber would be required to carry open wires over them. Or, again, to obviate the necessity for the cutting or removal of large ornamental trees. In most of these cases the cable has been erected in spans of normal length.

Recently, experimental routes have been erected with short spans (40 yd.) in order to determine whether there is any economic field for the use of this form of construction. Such routes are cheaper in capital cost than the corresponding underground route, but the maintenance charges are distinctly heavier.

Cable P.C. aerial is available in 8, 15, 25, and 50-pair sizes with 10 lb. conductors, and in 7-pair 40 lb. and 14-pair 40 lb. M.T. Two types of suspension wire are used, viz., 190 lb. steel wire and stranded steel wires according to the weight per foot of the cable to be suspended and to the length of the span. For the short or 40 yd. span, two 190 lb. steel wires are used for cables weighing up to 1 lb. per foot, above that weight either one 7/14, 7/12, or 7/10 steel strand wire is used. For 60 yd. spans two 190 lb. steel wires are used for cables weighing ·8 lb. per foot. Every tenth pole should be earth-wired with 150 lb. copper wire to which the suspending wire should also be bonded by a soldered connection. The cable should be bonded to the suspending wire by a 1 in. strip of 5 lb. lead. The marline loop, which has replaced the rawhide suspender, is shown in Fig. 724.

The suspending wire is first erected, and the suspenders attached to the cable as it is paid off the drum. The hooks are passed over the wire and the cable drawn along by a rope. In this way the weight of the cable

* Recent research seems to point to a ternary alloy with cadmium as an essential ingredient. Serious difficulty has arisen due to crystallization of the lead of lead-covered cables on battleships where vibration at high rates is experienced.

is borne by the suspending wire even while being erected.

The cable should be fixed as low down the pole as practicable, and chimneys must be carefully avoided owing to the action of the smoke. All risk of chafing must also be obviated. The pole at which the open wires pass into the aerial cable usually requires a longitudinal stay to pull against the open wires.

Roof Standards. The use of standards fixed on the roofs of buildings is now an obsolete form of construction. The

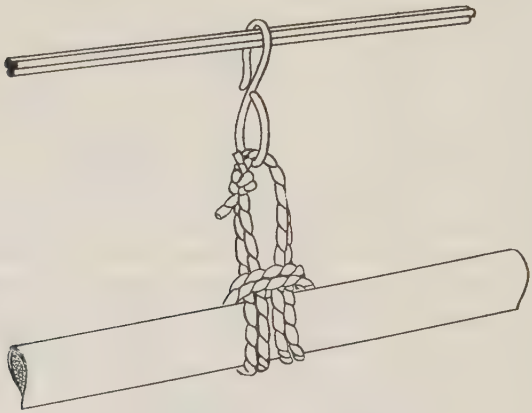

Fig. 724. Marline Suspender

reasons which led to its existence were, firstly, the necessity to obtain the requisite transmission by avoiding the insertion of short underground lengths in long trunk routes passing from, through, and to, large towns and cities, and secondly, for the distribution of subscribers' circuits in congested areas where wayleave difficulties were experienced by the N. T. Co.

Detailed description of the arrangements is not warranted. The average roof and building are ill adapted for the reception of standards, and in many cases additional strengthening was required. In every instance all lateral stresses were provided for by stays in such a manner as to make the standard an integral part of the building. On every roof where a standard was fixed trouble, sooner or later, developed on the question of the responsibility for roof repairs, and in some

instances where leakage occurred serious claims for damaged material stored in the rooms below were made. Then, too, there was often difficulty in obtaining access to the roof during holiday periods, and the fault which could ordinarily be cleared by a workman in a couple of hours was in existence for the larger part of two days and then required the services of a gang of men with long ladders.

APPENDIX A

SPEED OF WORKING AND FACTORS OF SAFETY

PART I.—SPEED OF WORKING

The time taken for the current in any given line to rise to any given percentage of its maximum value is directly proportional to the product of the total capacity and total resistance of the line. This product (farads $\times$ ohms) is termed the time constant of the line and is expressed in seconds. The working speed of the line is related to the K.R. of the circuit and, as a rough guide, it may be taken that the working speed of a simplex Wheatstone circuit is $11 \div$ K.R. subject to the limit at which the apparatus will work (nowadays Wheatstone transmitters are only tested up to a maximum speed of 300 words per minute). The empirical formula given requires to be applied in the light of experience, and should be used only to compare the rate of working with that of a circuit of similar construction but of different length. Since the length of the circuit enters into both the total capacity and the total conductor resistance, the working speed is inversely proportional to the square of the length. Later, an accurate method of calculating the working speed of a circuit will be discussed in some detail.

Here it should be mentioned that the resistance of the sending battery circuit is of some importance, since any value below 1^{ω} per volt of E.M.F. will result in sparking at the transmitter contacts and any value in excess of 3^{ω} per volt will tend to reduce the speed of working by cutting down the maximum value of the charging current at the moment when the battery contact is made.

Kelvin's Law and Arrival Curve. Lord Kelvin's name will for ever be associated with his classical

solution of the mathematical problem of the propagation of currents in telegraph cables.* The relation between the E.M.F. applied to a cable and the value of the current at each instant at the receiving end is complex, but many important applications of the law can be stated in simple form.

When an E.M.F. is applied to a cable having a capacity of K farads and R ohms resistance the current received is practically zero until an interval equal to ·029 times the K.R. in seconds has elapsed. After the lapse of this interval, termed *the silent interval*†, the current rises gradually until it reaches full strength. At time equal to five times the silent interval the current has reached over half, and after the lapse of ten times this interval it is at full strength.

In the case of Atlantic cables having K.R. of from 2·4 to 8 seconds, the maximum value of the current is never even approached, but on the German cables which are the longest worked by the Post Office, the

* The expression for the current received at time t after the application of an E.M.F. of E volts to a circuit having a resistance of $R\omega$ and a capacity of K farads found by Lord Kelvin is—

$$C = \frac{E}{R} 2 \left\{ \tfrac{1}{2} - \theta + \theta^4 - \theta^9 + \theta^{16} - \theta^{25} + \quad . \quad . \quad . \right\} \quad \text{(i)}$$

where $\theta = \varepsilon^{-\frac{\pi^2 t}{KR}}$

A first approximation is $C = \frac{E}{R}\left(1 - 2\varepsilon^{-\frac{\pi^2 t}{KR}}\right)$

At time $t = \frac{KR}{\pi^2}$ i.e. $\frac{KR}{9{\cdot}87}$, $C = \frac{E}{R}\left(1 - \frac{2}{\varepsilon}\right) = {\cdot}265\,\frac{E}{R}$ or very roughly $C = \frac{1}{4}$ of $\frac{E}{R}$ after time in seconds equal to ·1 KR. C is practically zero for all values of t up to ·029 KR second. At $t = {\cdot}29\ KR$ second it is at full strength.

† Strictly, there is no interval of silence since the current begins to grow immediately the battery contact is made, but it is true that it grows at a very small rate until the point noted. There is, however, no discontinuity in the arrival curve, and the so-called silent interval has no physical significance.

current attains half its full value in rather less than $\frac{1}{50}$ and its full value in $\frac{1}{20}$ second. On any circuit which admits of a Wheatstone speed of 400 words per minute, the current attains about 60 per cent of its steady value after the lapse of ·0031 second (the length of a dot current).

Every telegraph receiving instrument requires a certain minimum current in order to actuate it. The time taken for the current in any circuit to attain this value is inversely proportional to the applied E.M.F. This time determines the speed of working, since signals cannot succeed each other at intervals more frequent than the time taken to operate the receiving instrument.

The effect of low insulation is progressively to attenuate the E.M.F. along the line and, therefore, that applied to the receiver terminals and the operating time is thereby increased with consequent reduction in working speed. The tendency of the natural inductance of the cable itself is to increase the working speed, but neither inductance nor leakage produce any very material benefit. When, however, in the case of long submarine cables the copper core is wrapped with permalloy, the inductance is increased to such a value that the working speed of the cable is considerably increased —certainly to eight times the speed of a similar but unloaded cable.

Capacity. The conductor resistance and capacity of circuits in paper core cables are given on page 1024, and it need only be added that the average capacity of single aerial lines varies from ·0144 mf. per mile for 100 lb. to ·0156 mf. per mile for 400 lb. copper conductors. In practice, an average figure of ·015 may generally be used.

Metallic Circuits. The K.R. of a metallic circuit is somewhat greater than that of a single wire earthed circuit of the same loop. The resistance of the loop is twice, but its capacity is roughly two-thirds that of the single wire. The main portion of the capacity of the

loop consists in the capacity to earth of each wire, and therefore the wire-to-wire capacity is approximate to half that of the single wire.

Taking the wire to earth capacity of a single wire as ·1 m.f. per mile and the wire to wire capacity of a similar loop as ·066 m.f. per mile—

Single wire $K_1R_1 = \cdot 1lR$

Loop $K_2R_2 = \cdot 066 \times l \times 2R$

$$\therefore \quad \frac{K_1R_1}{K_2R_2} = \frac{3}{4}$$

where l is the length of the circuit in miles and R is the total resistance of the single wire.

Duplex Speeds. It is found that the working speed obtainable at duplex, whether differential or bridge, is

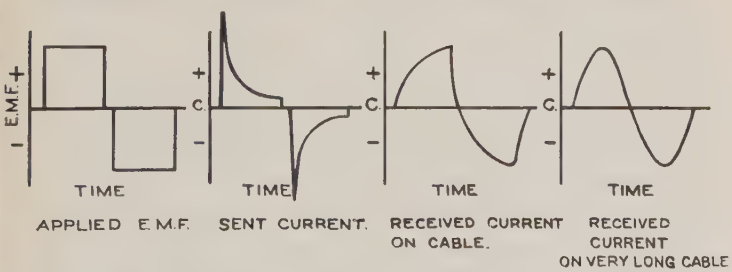

Fig. 725. Signal Shapes

generally slightly less than two-thirds of the simplex speed.

Signal Shape. On a short line with receiving apparatus of negligible inductance, the received current would be square topped like the E.M.F. applied. The effect of inductance in the receiving apparatus would be to slow down both the rise of the current and its reversal somewhat as in the third sketch, but not to so pronounced a degree. (Fig. 725).

On a circuit having a high capacity the sent current is of the form shown in the second sketch, and may reach a maximum of 300 mA, and this is why heat coils having a striking point of 250 mA are inadmissible

on Wheatstone circuits. The received current will be of the form shown in the third or for very long cables, as in the fourth sketch.

Theoretical Speed.* The maximum theoretical speed of signalling in a telegraph system is limited by the maximum allowable departure of the shape of the received signal from that of the transmitted signal. The factors causing the distortion of the signals can be divided into two classes—

(*a*) Distortion due to the line itself.

(*b*) Distortion due to irregular causes, such as variation of battery voltage, chattering of relays, interference from external sources, etc.

It is thus seen that the development of any mathematical expression for the maximum speed of signalling when the effects of both (*a*) and (*b*) are present would involve an exact knowledge of the behaviour of all these separate factors. A reference to the work already done in this direction shows the difficulty of this problem. The limitation of speed imposed by (*a*) alone may be regarded as the maximum theoretical speed possible on any given line. With regard to the effects mentioned in (*b*) experimental methods can be developed for any particular case to enable some of the separate factors to be determined with a certain degree of accuracy. Empirical formulae can then be formed to allow for the effects of (*b*) on the maximum theoretical speed. In the following paragraphs a simple method is shown by which the reduction of speed due to the combined effects of (*b*) in any given case, can be obtained.

Consider the case of a very long circuit, such as that of an unloaded ocean cable, the deciding factors in limiting the speed of signalling are those mentioned in (*a*). For very short lines, less than 50 miles, say,

* Some notes on arrival curves and theoretical telegraph speeds by W. T. Palmer and H. J. Josephs, *P.O.E.E. Journal*, Vol. 21, p. 199, October, 1928.

the limitation of speed is chiefly fixed by the effects of (*b*) ; but the majority of cases fall between these two extremes, and the actual speed obtainable is limited partly by (*a*) and partly by (*b*).

Consider Fig. 726. The full curve *OCFG* is a typical example of the way in which the current grows at the receiving end of a line, whatever its length, or terminal apparatus in use, when a sudden steady E.M.F. is applied at the sending end.

The line of greatest slope *AB* can be easily drawn, and it will be found to coincide with a portion *CF* of

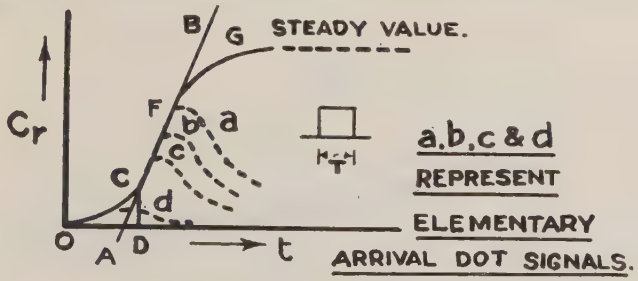

FIG. 726. ARRIVAL CURVE FOR DOT SIGNAL

the curve. From *C*, the point at which *AB* leaves the curve, the ordinate *CD* is drawn, and it can be seen that for times of contact greater than *OD* the elementary signals *a*, *b*, etc., are similar in shape, but for times smaller than *OD* the elementary signals tend to flatten rapidly and successive signals will thus overlap. *OD* can be taken as a measure of the smallest time of contact for a current impulse permissible if good legible signals are to be received, and assuming the receiving apparatus to have the necessary sensitivity. If the number of signal elements per letter required by the particular code used be known, then from the length of time represented by *OD* the maximum theoretical speed in letters per minute, *n*, can be calculated. Further, it will be found that the maximum speeds

calculated by this method for different lengths of unloaded cable, having the same electrical constants, obey a law of the form

$$n_1 = \frac{A_1}{krl^2} \quad . \quad . \quad . \quad . \quad . \quad (1)$$

where A is a constant, k = capacity per unit length, r = resistance per unit length, and l = total length of cable.

Having found n_1, from Fig. 726 as explained, the value of A_1 is readily calculated by equation (1). Now,

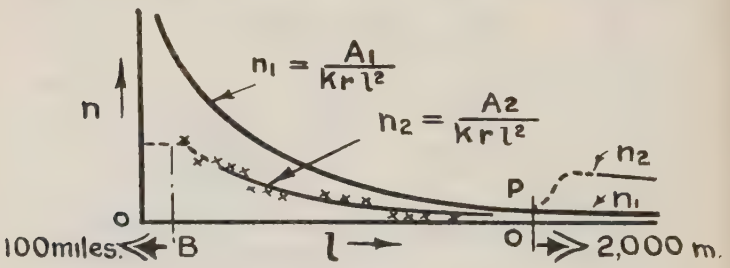

Fig. 727. Curves of Theoretical and Actual Speeds of Working

if the actual working speeds, n_1 obtained on different lengths of the same type of cable using similar terminal apparatus be plotted and the mean curve drawn through them, this curve is found to be also of the form

$$n_2 = \frac{A_2}{krl^2} \quad . \quad . \quad . \quad . \quad . \quad (2)$$

and A_2 is obtained from points on the curve. See Fig. 727, where the crosses represent experimentally obtained points and the dotted portions are possible continuations not verified by experiment.

Thus the *total reduction of speed* produced by the combined effects of (*b*)—and considered for lengths less than that represented by *OQ* in Fig. 727—appears to

follow a similar law to that of the famous " KR " law, and is given by

$$n_1 - n_2 = \frac{A_3}{krl^2} \quad . \quad . \quad . \quad . \quad (3)$$

where $A_3 = A_1 - A_2$.

3. **" Encroachment " or " Margin " and Loaded Telegraph Cables.** The term " encroachment " or " margin " has been used to denote the amount by which parasitic or interfering currents modulate the received signal. The greater the slope of the tangent

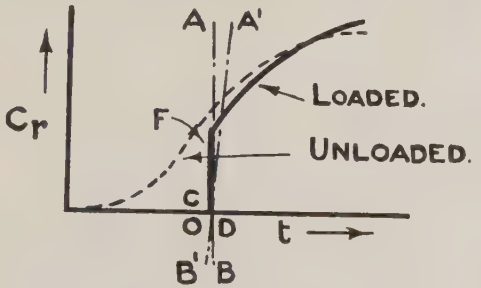

FIG. 728. ARRIVAL CURVES OF LOADED AND UNLOADED CABLE

AB, shown in Fig. 726, the more will the effect of " encroachment " be diminished. In the limit, if the tangent AB is made vertical, the " encroachment " can be made negligible by sufficient amplification of the received signal. Now, in long cables, no very great increase in speed of working has been possible by further terminal improvements, and it would appear necessary to increase the slope of AB by altering the cable constants. Recent investigations have led to the development of long ocean cables having artificially increased inductance by means of uniform wrappings of " permalloy "— a material which is capable of adding more than 100 milli-henries per nautical mile to the natural inductance of the cable. The added inductance alters

the shape of the arrival curve shown in Fig. 726 to the type shown in Fig. 729, and it will be seen that the current is now propagated with a vertical head FO; the shorter the length of cable considered the greater is the height FO, and AB is, theoretically, a vertical line.

In practice AB is not quite vertical, but slopes like A^1B^1 due to variation of the electrical constants with frequency and current.

By reference to Fig. 728, it is quite clear that the time OD is not easily determined by this method. This

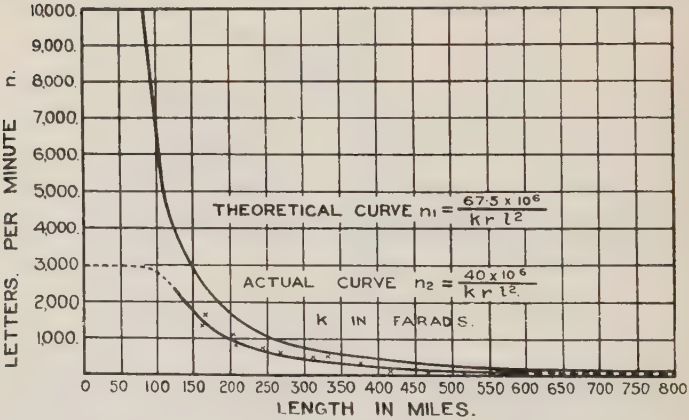

Fig. 729. Speed of Working on Cables

time, however, will be extremely small, and the theoretical speed is enormously higher than the actual speed obtained in any given case, due to the limitations imposed by the irregular causes (*b*).*

Calculation of Working Speeds in Telegraph Underground Cables. The use of unloaded pairs in telephone cables for telegraphs and the consequent limitations

* The reader desiring to pursue the question of submarine cable speeds should consult "The continuously-loaded submarine Telegraph Cable" by A. E. Foster, P. G. Ledger, and A. Rosen, *Journal I.E.E.*, Vol. 67, p. 388.

imposed as regards voltages and line currents have rendered it necessary to approach the question of telegraphic speeds from a somewhat different angle than hitherto. In order to ensure that the duration of a contact is such as to give a good signal under given conditions the arrival curve is graphed, and a suitable point of the curve is taken as a basis for the determination of the working speed.

The Kelvin arrival curve is not easy to manipulate, but Dr. Malcolm* has deduced a simpler form of the expression which is specially applicable to values of the element time factor t of less than 1 second.

The expression is

$$C_r = 2 \times 10^6 \sqrt{\frac{k}{\pi r t}} \times \epsilon^{-\frac{T}{4t}} \quad . \quad . \quad . \quad (1)$$

where C_r = the received current in micro-amperes per volt

k = capacity per mile

r = conductor resistance per mile

$T = krl^2 = KR/1{,}000{,}000$ seconds

t = duration of contact in fractions of a second, representing the rate at which the signals follow each other

ϵ = base of naperian logs.

With a table of exponential functions the value $\epsilon^{-\frac{T}{4t}}$ can be read off under the column ϵ^{-x}

Formula (1) can be simplified further as follows—

For Single-screened Conductors,

$$C_r = \frac{356}{\sqrt{rt}} \times \epsilon^{-\frac{T}{4t}} \quad . \quad . \quad . \quad . \quad (2)$$

For Loops in Telegraph Cables,

$$C_r = \frac{287}{\sqrt{rt}} \times \epsilon^{-\frac{T}{4t}} \quad . \quad . \quad . \quad . \quad (3)$$

* *The Theory of the Submarine Telegraph and Telephone Cable,* by H. W. Malcolm, p. 236.

For Unloaded Loops in Telephone-telegraph Balanced Cables,

$$C_r = \frac{276}{\sqrt{rt}} \times e^{-\frac{T}{4t}} \quad . \quad . \quad . \quad . \quad (4)$$

In Fig. 730 the ordinates of the graph show the values of the increasing current with the lapse of the

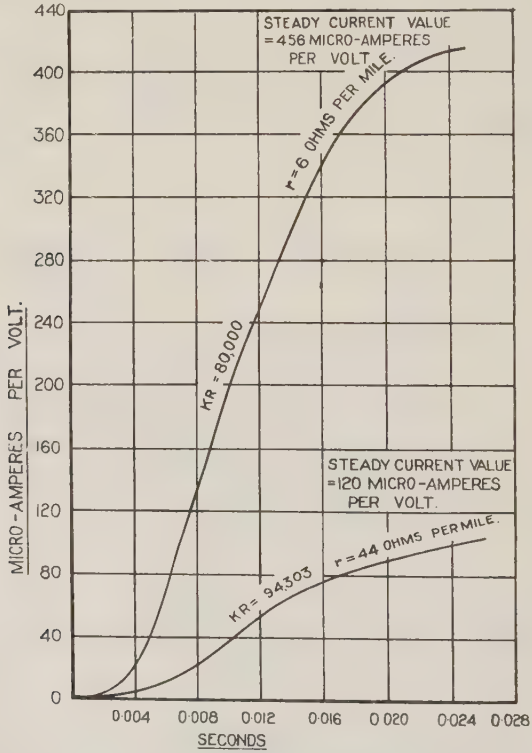

Fig. 730. Contrasted Arrival Curves

small intervals of time t indicated on the abscissae in respect of two cases.

It will be clear that the two instances shown represent

widely different conditions, but if a graph be made in which the ordinates represent the percentage of the received currents and the abscissae the ratio of t to T, where $T = krl^2$, then the curves will take the form shown in Fig. 731.

It should be noticed that $T = krl^2$ in seconds when k is expressed in farads, and therefore the KR values as ordinarily obtained (where k = mf. per mile) require to be divided by 1,000,000 to express the time constant (T) of the cable in seconds.

The application of the formulae (2), (3) and (4) to a particular case is indicated as follows—

$$l \text{ miles} = 365$$
$$r \text{ ohms per mile} = 6$$
$$R = l \times r = \text{conductor resistance } 2{,}190 \text{ ohms}$$
$$k = 0{\cdot}1 \text{ mf. per mile} = \text{and } kl\ 36{\cdot}5$$
$$kr = 79935$$
$$T = krl^2 = 0{\cdot}079935 = 0{\cdot}08$$

If $t = 0{\cdot}02$ second

then ratio $t/T = 0{\cdot}02/0{\cdot}08 = 0{\cdot}25$

and $T/4t = 0{\cdot}08/0{\cdot}08 = 1{\cdot}00.$

From a table of exponential functions when

$$\frac{T}{4t} = 1, \text{ then } \epsilon^{-\frac{T}{4t}} = 0{\cdot}368$$

so that the microamperes per volt from equation (2)

$$C_r = \frac{356}{\sqrt{rt}} \times 0{\cdot}368$$

$$r = 6 \text{ and } t = 0{\cdot}02$$

$$\sqrt{rt} = 0{\cdot}346$$

$$C_r = \frac{356}{0{\cdot}346} \times 0{\cdot}368 = 378 \text{ micro-amperes per volt.}$$

The steady current value in this case in microamperes per volt is

$$C_3 = \frac{1000000 = \text{microvolts}}{2190 \quad = \quad l \times r} = 456$$

The received current obtained from the formula when $t = 0{\cdot}02$ is in this case 83 per cent of the steady current value.

On this basis empirical formulae have been derived, which give close approximations to the working speeds between the KR limits of 20,000 and 140,000, or to express the limits in terms of seconds between $T = 0{\cdot}02$ and $T = 0{\cdot}14$.

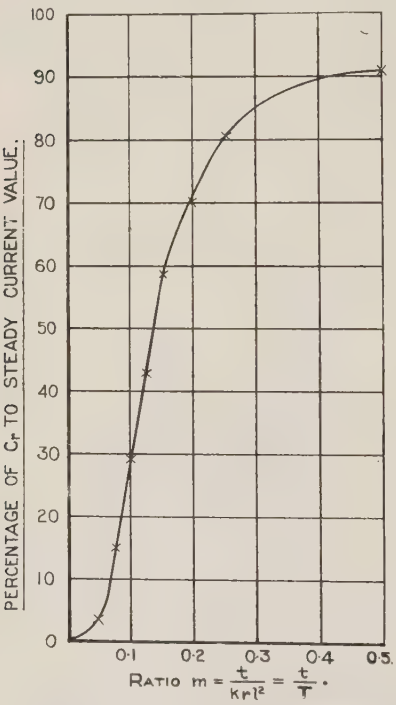

FIG. 731. RECEIVED CURRENT
Shown as a percentage of its steady current value with lapse of time

In working out the method it will be convenient to consider the Morse code. The length of the marking current of a dot signal t (second) is $\frac{1}{48}$ of the time occupied in signalling one word (see pages 389 and 411.) Hence the speed of working in words per minute,

$$S = 60 \div 48t = 1{\cdot}25 \div t \quad . \quad . \quad (4)$$

This factor t in formula (4) is the same factor as t in formula (1).

From Fig. 731 it will be seen that the ratio $m = t/T$ is plotted as abscissae with the C_r as a percentage of the steady value current as ordinates. For the approximate determination of speeds a point of this curve is taken so that the time t is equal to $0{\cdot}16\ T$.

i.e. $$m = \frac{t}{T}$$

and $$m = 0{\cdot}16 \text{ and } t = 0{\cdot}16\,T \quad . \quad . \quad (5)$$

In connection with the determination of speeds in circuits it is necessary to take into account the apparatus arrangements and adjustments at each end of the circuit, and in order to provide for these the following corrections require to be made in arriving at the value of t to be applied to formula (4), viz.—

$x = + 0{\cdot}16\,T$

$y = + 0{\cdot}002$ to $+ {\cdot}004$. Where electro-magnetic induction on long single-screened large gauge conductors is known to exist the larger values are applied.

$z = - \frac{1}{2}x$ for relay standard G (vibrating relay)

$= - \frac{1}{3}x$ for shunted condenser and simplex working, so that formula (4) becomes

$$S\ (wpm) = \frac{1{\cdot}25}{x + y + z} \quad . \quad . \quad . \quad (6)$$

The application of formula (6) is simple. With a KR of 80,000 the value of $T = 0{\cdot}08$. Assuming the use of a relay standard G (vibrating)—

$$x = 0{\cdot}16 \times 0{\cdot}08 = 0{\cdot}0128 +$$
$$y = \qquad\qquad 0{\cdot}003 +$$
$$\text{Total} + \qquad 0{\cdot}0158$$
$$z = - \tfrac{1}{2}x \qquad = 0{\cdot}0064$$
$$\text{Net total} \qquad 0{\cdot}0094$$
$$S = wpm = \frac{1{\cdot}25}{0{\cdot}0094} = 133$$

If an ordinary Standard Relay "B" is in use the value z does not appear.

The anticipatory effects involved in the use of vibrating relays and shunted condensers are represented by the negative quantity z.

It is usual to express the line speeds of Baudot circuits in terms of the Morse eight-unit code ; probably because with Wheatstone it is possible in practice to

increase speed readily and therefore to obtain the breaking-down point in any given case in terms of Wheatstone speeds.

The line speed of Baudot circuits is arrived at by taking half the number of segments on the distributor and multiplying by the number of revolutions per second.

The following figures are obtained in this way—

Baudot Set	Segments	r.p.m.	Revs. per Second	Cycles per Second	Equiv. Wheatstone Speed
Double *dx* . .	12	180	3	18	45
Triple *dx* . .	17	180	3	25½	63¾
Quadruple *dx* .	22	180	3	33	82½
Double *dx* . .	12	210	3½	21	52
Triple *dx* . .	17	210	3½	29¾	74·375
Quadruple *dx* .	22	210	3½	38½	96¼
Quintuple *dx* .	27	210	3½	47¼	118·125
Double *dx* . .	12	240	4	24	60
Triple *dx* . .	17	240	4	34	85
Quadruple *dx* .	22	240	4	44	110
Quintuple *dx* .	27	240	4	54	135

When the correction is made from the line signals the number of segments is reduced by two. Thus in the case of Western Electric Multiplex, which is a quadruple *dx*, there are only 20 segments, and the speed is correspondingly higher.

Although these figures represent the equivalent Wheatstone speed it is usually found that, for example, Quadruple Baudot at 180 r.p.m. requires a line that will give 100 w.p.m. Wheatstone instead of the 82½ w.p.m. as calculated.

The use of Relays Standard "B" and Relays Standard "G" (vibrating) has been assumed in connection with these calculations.

It should be noticed that any limitations imposed in respect of current and voltage can be applied from a consideration of the steady current value.

So far as the speed of the terminal apparatus is concerned it may be said that the Relay Standard " B " can receive signals at 400 words per minute. Inserting this value into equation (4) gives a value of t,

$$t = \frac{1{\cdot}25}{400} = 0{\cdot}003125 \text{ second.}$$

The maximum speed required by the Traffic Department is 200 w.p.m., and the duration of the contact time for this speed is therefore 0·00625 second.

So far as sensitivity is concerned, the latest form of Post Office Standard Relay is fitted with a spring tongue which practically eliminates the tendency to chatter, and this device together with a new method of annealing the cores of the electro-magnet has reduced the steady current figure of merit to 0·25 mA.

A relay modified in this way and wound with vibrating coils was compared with another relay (No. 209 FA) of high sensitivity, having in fact a figure of merit which in a lot of six samples varied from 50 to 125 microamperes. The tests showed that on a loop of 20 lb. wire in a telephone-telegraph balanced cable, with a KR of 80,000, there was little to choose between the results obtained from the two relays until the steady current was reduced below the value of 3·5 mA. when the advantage lay with the instrument of higher sensitivity. The adjustments of this relay are critical and special magnetic screens are necessary in an instrument room. This indicates that apart from circuits involving duplex working over loaded conductors where the current values are necessarily low the Post Office standard relay adequately fulfils the conditions.

Hughes working requires a line speed equivalent to Wheatstone at 40 words per minute, i.e. to 16 cycles per second.

Weak Current Telegraphy. Since most subterranean telegraph circuits will be worked as metallic circuits, the power used will be greatly decreased so as to

prevent interference with telephone loops in the same cable. Experiment has shown that Wheatstone working with a current of from 5 to 10 mA and a voltage not exceeding 40 is possible when the speed does not exceed 200 words per minute. It has been found that this speed was practicable on a metallic circuit 190 miles long consisting of 40 lb. conductors, and this without appreciable interference with the adjacent telephone circuits. The cable used was not loaded, but it was balanced. Balancing consists in measuring carefully the capacities of the various conductors in each section, and then arranging the jointing of the pairs together in such a manner as to produce accurate balance on the jointed length.

On a 200 lb. loop circuit 210 miles long a duplex speed of 200 words per minute was obtained, with a voltage of $13\frac{1}{2}$ by using the standard *G* vibrating relay.

A series of extended trials were made recently on a balanced cable containing loaded and unloaded pairs by A. H. Roberts, W. J. Hilyer, and F. Lock,* and their results are summarized as follows—

(1) Over a loop circuit 186 miles in length a speed of 150 words per minute duplex can be obtained with 40 volts on the differential system and 60 volts on the bridge system, G relays being used.

(2) The induction on loaded telephone pairs is less from differential than from bridge Wheatstone working.

(3) If the steady line current is raised without altering the surge current, the induction on the telephone loop is unaffected. (The steady current may be varied without altering the battery surge current on a long line by adjusting the resistance at the receiving end.)

(4) The increase in the battery surge current caused by increasing the main voltage or speed of running increases the induction.

* "Combined Telephone and Telegraph Cables: Important Trials by A. H. Roberts, W. J. Hilyer, and F. Lock," *P.O.E.E. Journal*, Vol. xiii, p. 29.

(5) Induction on loaded telephone pairs is increased when the number of Wheatstone circuits working on loops in the cable is increased, but the resultant noise is not proportional to the number of Wheatstone circuits in use.

(6) Ordinary loop circuits working at 40 volts give about the same induction on a loaded telephone loop as single wire earth return circuits working at 20 volts, when the wire twisted with the line wire is earthed at each end so as to screen the line wire. If, however, the single wire circuit is worked at a higher voltage, it gives greater induction than the loop circuit.

(7) If " bunching " be allowed for the Wheatstone circuits in a cable, it is better to form each " leg " from a pair than from two " *a* " or two " *b* " wires of two pairs (the two " legs " must be in the same 4-wire core).

(8) If superposed Wheatstone working be permitted, the Wheatstone should be superposed on two telephone pairs and worked as a loop. In the trials made, the induction in the side circuit on which the Wheatstone was superposed was marked.

(9) When a thermionic telephone relay was inserted in a telephone cable line, the disturbance caused by induction from Wheatstones was not increased beyond the induction noted without the relay in the listening circuit.

(10) No degrading effect on speech was noted on the loaded circuits when fourteen 40-volt Wheatstone transmitters were running on unloaded loops in the same cable.

PART II.—OVERHEAD TELEGRAPHS

*CIRCUIT EFFICIENCY AND FACTORS OF SAFETY**

In this country the atmospheric conditions are such as to make the loss of current due to low insulation

* " Overhead Telegraphs : Notes on Circuit Efficiency," by J. L. Taylor, *P O.E.E. Journal*, Vol. x, p. 78 ; " Overhead Telegraphs and

the predominating factor which limits the length of overhead telegraph wires. For example, the distance between repeater offices is usually about 200 miles for fast speed apparatus, in which the receiving instrument is a Post Office standard relay "B" or its equivalent. The more important systems of working in use on aerial wires include the following—

(1) Key double current Morse.

(2) Fast speed telegraphs.

(3) Quadruplex with 40 and 120 volts.

(4) C.B. Telegraphs, special Head Office sets, 80 volts.

(5) C.B. Telegraphs ordinary Head Office sets, 80 volts.

(6) C.B. Telegraphs, Duplex with relay at out office.

(7) C.B. Telegraphs, Duplex with polarized sounder at out office.

(8) Quadruplex with 24 and 80 volts.

(9) C.B. Telegraphs with primary batteries.

In the cases of (1), (2), (3), and (8) the reception will depend upon two factors, viz. (*a*) received current, and (*b*) speed; in cases (6) and (7) the system is complex, consisting as it does of a combination of double current working outwards and single current decrement working inwards; in cases (4), (5), and (9) the limiting conditions depend upon the voltage drop at the Head Office apparatus set, and this is affected to a great extent by the leakage conditions on the line.

For the cases (4), (5), and (9) it is usual to apply calculations on the basis of steady voltage values, and for the purpose of comparison it is convenient to arrive at the limiting distances for the other types of apparatus sets on the same basis. As $E = C \times R$, it will be clear that loss of current is proportional to voltage

---

the Leakage Conductance Theory," by J. L. Taylor, *ibid*, Vol. xi. pp. 19, 74; "Morse Quadruplex Working," by J. L. Taylor, *ibid*, Vol. xi, p. 209.

drop, and the same principle may, therefore, be applied to all classes of circuit. In order to compensate for the attenuation of signals due to high-speed working, the minimum received currents in the latter case are given a higher value.

In arriving at approximations to the limiting distances for different types of apparatus sets on this basis, it is necessary to assume that the insulation loss is uniformly distributed, and that the leakage may be represented as a resultant earth fault at the centre of the line resistance (see Chapter XXII).

If the circuit is L miles long and has a conductor resistance per mile of r_a ohms, then the calculated conductor resistance (R_a) will be $L \times r_a$.

Suppose $L = 400$ miles and $r_a = 6^{\omega}$ per mile, then $L \times r_a = 400 \times 6 = 2400^{\omega} = R_a$.

If two fixed resistances of 1200^{ω} are connected as shown in Fig. 732, x being a variable resistance, and

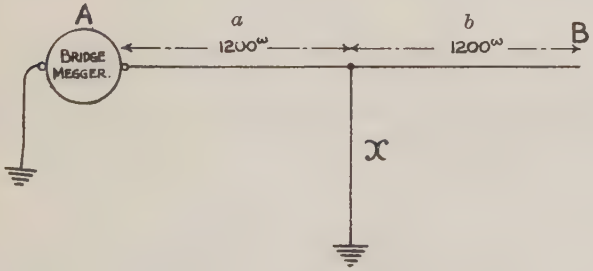

FIG. 732. TEST 1 WITH B DISCONNECTED R_i
TEST 2 WITH B EARTHED R_c

two tests be made for each value of x, viz. Test 1 with B disconnected (call the reading obtained R_i), and Test 2 with the end B connected to earth (call the reading obtained R_c) the results shown in Table 1 will be obtained.

From column (j) it will be seen that when x is made 150^{ω}, the value of R_i is 1350^{ω} and R_c is $1333{\cdot}3^{\omega}$. The

TABLE 1

	(a)	(b)	(c)	(d)	(e)	(f)	(g)	(h)	(j)
Value of x	Inf.	9600	7200	4800	2400	1200	600	300	150
R_i	Inf.	10800	8400	6000	3600	2400	1800	1500	1350
R_c	2400	2266·6	2228·5	2160	2000	1800	1600	1440	1333·3
Value of x in terms of R_a	Inf.	$4R_a$	$3R_a$	$2R_a$	R_a	$\frac{1}{2}R_a$	$\frac{1}{4}R_a$	$\frac{1}{8}R_a$	$\frac{1}{16}R_a$

values of R_i and R_c tend to approach each other as the value of x is decreased. Fig. 733 shows the case

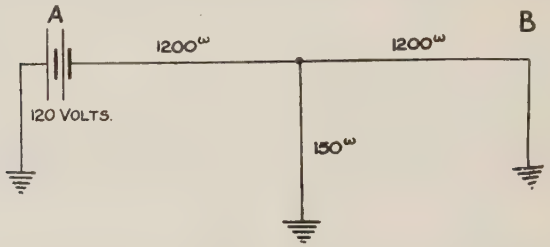

FIG. 733. 2400ω CIRCUIT WITH 150ω LEAK IN CENTRE

represented under column (j), but a battery of 120v is applied in this instance.

The sent current

$$C_s = \frac{120}{1200 + \frac{1200 \times 150}{1200 + 150}} = \frac{120}{1333{\cdot}3} = 90 \text{ mA},$$

and the received current

$$C_r = \frac{150}{1350} \times 90 = 10 \text{ mA}.$$

Now, when $x =$ infinity, the sent current C_s equals the received current $C_r =$ the perfect current $C_p = \frac{120}{2400} = 50$ mA. So that the percentage of

perfect current lost is in this instance $\frac{40}{50} = \frac{x}{100}$ or $x = \frac{4000}{50} = 80\%$.

Table 2 shows the percentage loss for each of the cases shown in Table 1 together with the respective ratio of R_1 to R_i in each case.

TABLE 2

	(*a*)	(*b*)	(*c*)	(*d*)	(*e*)	(*i*)	(*g*)	(*h*)	(*j*)
Value of z .	Inf.	$4R_a$	$3R_a$	$2R_a$	R_a	$\frac{1}{2}R_a$	$\frac{1}{4}R_a$	$\frac{1}{8}R_a$	$\frac{1}{10}R_a$
Percentage loss of perfect current .	0	5·88	7·69	11·5	20	$33\frac{1}{3}$	50	$66\frac{2}{3}$	80
Ratio R_i/R_c .	Inf.	4·76	3·76	2·77	1·8	1·33	1·125	1·04	1·01

From Table 2 it will be clear that the received current increases as the value of the ratio R_i/R_c increases, and in the application of this principle to overhead telegraph wires it will be evident that a close approximation to the percentage loss of perfect current can be obtained by dividing the insulation resistance reading by the conductor resistance reading, and thus obtaining the value of the ratio R_i/R_c (see Fig. 734).

These results may be applied to working conditions, for Kennelly, in his work on *The Application of Hyperbolic Functions to Electrical Engineering Problems*, states that for an equivalent T circuit (such as has been assumed, Fig. 732) the values of the elements in the equivalent circuit of a line may be written down in terms of the observed resistances R_i (Insulation) and R_c (Conductivity) by using the following correcting factors ; i.e.

The equivalent value of $a = b = R_i\left(1 - \sqrt{1 - \frac{R_c}{R_i}}\right)$

and the equivalent value of $x = R_i\sqrt{1 - \frac{R_c}{R_i}}$

By way of illustration, assume that the observed readings

obtained are as in (*g*), Table 1, in which $R_i = 1800$ and $R_c = 1600$, the ratio R_i/R_c being 1·125.

$$\text{Value of } a = b = R_i\left(1 - \sqrt{1 - \frac{R_c}{R_i}}\right)$$

$$\frac{R_c}{R_i} = \frac{1600}{1800} = \frac{1}{1{\cdot}125} = 0{\cdot}\dot{8} = \frac{8}{9}$$

and $$\sqrt{1 - \frac{8}{9}} = \sqrt{\frac{9-8}{9}} = \sqrt{\frac{1}{9}} = \frac{1}{3}$$

so that $$a = b = R_i\left(1 - \frac{1}{3}\right) = R_i\left(\frac{3-1}{3}\right) = \frac{2}{3}\,R_i$$

$$= \frac{2}{3} \times 1800 = 1200$$

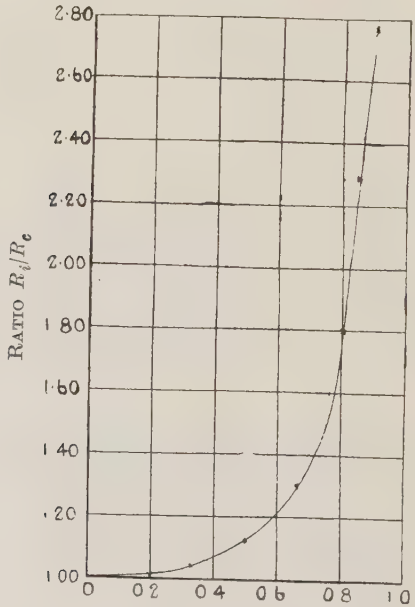

Fig. 734. Curve Connecting R_i/R_c and C_r/C_p

also value of $x = R_i\sqrt{1 - \frac{R_c}{R_a}} = \frac{1}{3} R_i$

and $\frac{1}{3}R_i = 600$. That is to say, $a = b = \frac{1}{2}R_a$ and $x = \frac{1}{4}R_a$ (see Table 1 (*g*).)

All the values of the figures obtained by means of the Leakage Conductance Theory method can be verified in this way, and, in addition, the resultant leakage path resistance can be determined for cases in which the mileage is not exactly at the limiting distance, and from the equivalent T circuit thus obtained the voltage and current calculations are placed on the simple basis of the " Perfect Current " conditions represented by a wire of known resistance per mile and of a given length.

For given insulation resistance conditions the value of x will decrease with the length of the line, as every additional mile also adds about 30 additional points of leakage, each point of leakage representing a telegraph pole.

To arrive at approximations to the limiting mileages on the basis of the steady value received current minima is therefore a comparatively simple matter, as it is only necessary to determine the approximate percentage loss of perfect current that can be allowed for each type of apparatus set. The problem is simplified by the fact that in this country voltage from a universal battery system is limited to a maximum of 120 volts. Table 3 shows approximations to the mileage limitations arrived at on this basis.

TABLE 3

Type of circuit and voltage	Line minimum ratio R_i/R_c	Percentage loss of perfect current	Length of circuit in miles
Key D.C. Morse with relay (120 volts)	1·01	80%	$\frac{1000}{\sqrt{r_a}}$
Fast speed Telegraphs (120 volts)	1·04	66⅔%	$\frac{700}{\sqrt{r_a}}$
Quadruplex with 40 and 120 volts	1·125	50%	$\frac{490}{\sqrt{r_a}}$
Quadruplex with 24 and 80 volts	1·8	20%	$\frac{223}{\sqrt{r_a}}$

In Table 3 r_a is the conductor resistance per mile. If $r_a = 9^{\omega}$ per mile, then the maximum overhead mileage for a Wheatstone duplex fast speed telegraph circuit will be approximately $\frac{700}{\sqrt{9}} = \frac{700}{3} = 267$ miles. For this type of line wire a circuit of 534 miles length would therefore require a repeater set at the half-way distance.

The values shown in Table 3 assume duplex working and the use for reception of low resistance terminal apparatus of the type equivalent to the Post Office standard relay "B."

The fast speed formula $700/\sqrt{r_a}$ comprises different *types* of apparatus sets, such as "Wheatstone duplex with receiver direct on line," "Wheatstone duplex with receiver on locals of standard relay 'B,'" "Wheatstone duplex with receiver on locals of standard relay 'G,'" "Baudot," and other multiplex systems in which a standard relay is utilized for the reception of line signals. Although classified under one formula, there are slight differences in respect of mileage limitations for which allowance would require to be made in practice.

In "Central Battery duplex with relay at the out office," the limiting condition is reached when the insulation resistance is 1·8 times the conductor resistance reading. When the ratio R_i/R_c falls below this value (1·8) the effective voltage is insufficient to actuate the armature of the non-polarized relay at the Head Office set and the local circuit is therefore permanently closed—maximum length L (miles) $= 223/\sqrt{r_a}$.

When a polarized sounder $100^{\omega} + 100^{\omega}$ is in use at the out office on a C.B. duplex circuit, the limiting condition is that of the sounder when used as a C.B.S. Head Office set, viz. L (miles) $= 141/\sqrt{r_a}$. This is due to the difference in the volume of sound obtained

at the out office under the two conditions with its set key up and key down, when the voltage drop on the line reaches the point indicated by the mileage limit given.

The limiting conditions on C.B.S. circuits worked from secondary cells are indicated in Fig. 735, which

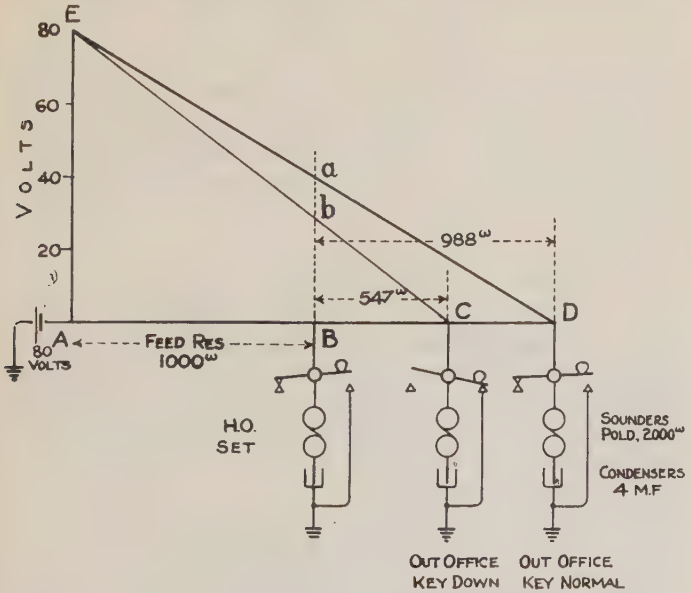

FIG. 735. C.B. TELEGRAPH CIRCUIT

shows graphically a C.B.S. circuit comprising 75 miles of 100 lb. copper wire $L \times r_a = 75 \times 8{\cdot}78 = 659\omega$.

The insulation conditions shown are such that

$$R_i = 1{\cdot}5\ R_a = 1{\cdot}5 \times 659 = 988\omega$$

and $$R_c = {\cdot}83\ R_a = {\cdot}83 \times 659 = 547\omega$$

and $$\frac{R_i}{R_c} = \frac{938}{547} = 1{\cdot}8.$$

A secondary battery of 80 volts is applied at A (Fig. 735) and with a line insulation resistance of 988ω

the fall of potential of the E.M.F. along a resistance path of 188^{ω} is represented by the line *EaD* on Fig. 735.

The Head Office set is connected at the end of the feed resistance shown at *B* (Fig. 735), and the potential at *B* when the out office key is normal will therefore be that at (*a*), i.e.—

$$= \frac{988}{1988} \times 80 = 39{\cdot}75 \text{ volts.}$$

When the out office key is depressed, the conductor resistance will be 547 and the fall of potential will be along the line *EC*. That is to say, the potential at *B* will drop from *a* to *b*. The potential at *b* will be equal to $\frac{547}{1547} \times 80 = 28{\cdot}28$ volts.

The voltage drop at *B* will therefore be—

$$(a - b) = (39{\cdot}75 - 28{\cdot}28) = 11{\cdot}47 \text{ volts.}$$

As the combination of a 2000^{ω} polarized sounder and a 4 m.f. condenser will respond to a voltage drop of about 11 volts, the apparatus at *B* will respond to signals under the control of the key at the out office.

The conditions in which $R_i = 1{\cdot}8\ R_c$ represent the limiting line conditions.

Now, when $R_i = 1{\cdot}8\ R_c = 1{\cdot}5\ R_a$, the value of x (Fig. 735) is equal to R_a. (See Table 2.)

In the case under consideration $R_a = 659$ and the length L of the circuit is 75 miles also, $75 \times 659 = 49425$. It can be shown that for the C.B.S. R_i/R_c ratios the product of the length of the circuit L (miles) and the resultant leakage path resistance x is practically a constant represented by 50,000 at the maximum distance given by the formulae, and similarly, that the constant is practically 60,000 in the case of the ratios R_i/R_c, equal to 1·01, 1·04, and 1·125. If this value be called r_o, then it may be said that $\frac{r_o}{L} = 659 = R_a = x$ = the equivalent resultant leakage path resistance for the given value of the ratio R_i/R_c.

On this hypothesis, it was shown that

$$R_i = \frac{R_a}{2} + x = \frac{R_a}{2} + \frac{r_o}{L}$$

but R_i also $= 1{\cdot}5\ R_a$

$$\therefore \quad \left(\frac{R_a}{2} + \frac{r_o}{L}\right) = 1{\cdot}5 R_a$$

whence $LR_a = r_o$

but $R_a = L \times r_a \quad \therefore L \times L \times r_a = r_o$

$$L^2 = \frac{r_o}{r_a}$$

Calling $r_o = 50000 \quad L^2 = \dfrac{50000}{r_a} \quad L = \dfrac{\sqrt{50000}}{\sqrt{r_a}}$

$$L = 223/\sqrt{r_a} \text{ miles.}$$

When a standard relay " B " (with coils in series) plus a 1000^{ω} resistance coil in series replaces the 2000^{ω} polarized sounder D at the Head Office set the voltage drop $(a - b)$ (Fig. 735) required to actuate the combination may be regarded as $5\frac{1}{2}$ volts.

Calling $(a) = V_1$ and $(b) = V_2$

$$V_1 - V_2 = 5\tfrac{1}{2} \text{ and } V_1 = \frac{R_i}{f + R_i} \times V$$

$$V_2 = \frac{R_c}{f + R_c} \times V$$

where $V =$ impressed voltage $= 80$

and $f =$ feed resistance

$$\therefore \quad V_1 - V_2 = \frac{R_i}{f + R_i} \times V - \frac{R_c}{f + R_c} \times V$$

$$= V\left(\frac{R}{f + R_i} - \frac{R_c}{f + R_c}\right)$$

$$\text{and } \frac{V_1 - V_2}{V} = \frac{R_i}{f + R_i} - \frac{R_c}{f + R_c} = \frac{5{\cdot}5}{80} = \text{say } \frac{1}{15}$$

No material error will arise if it be assumed that the

insulation resistance R_i may fall to the value of the feed resistance f, so that it may be considered $f = R_i$

$$\frac{1}{15} = \frac{R_i}{2R_i} - \frac{R_c}{R_i + R_c} = \frac{R_i^2 + R_iR_c - 2R_iR_c}{2R_i(R_i + R_c)}$$

$$\frac{1}{15} = \frac{R_i^2 - R_iR_c}{2R_i^2 + 2R_iR_c}$$

whence $$\frac{R_i}{R_c} = \frac{17}{13} = 1{\cdot}3$$

That is to say, to obtain the required voltage drop at the Head Office set under all conditions, the worst line conditions should be such that the insulation resistance R_1 shall not be less than 1·3 times the conductor resistance R.

From Table 2 it will be seen that when

$$x = \tfrac{1}{2}R_a \text{ then } R_i/R_c = 1{\cdot}33$$

with $$x = \tfrac{1}{2}R_a \text{ then } R_i = R_a$$

and $$R_i = R_a = \left(\frac{R_a}{2} + \frac{r_o}{L}\right)$$

or $$R_a = \frac{LR_a + 2r_o}{2L}$$

$$2LR_a = LR_a + 2r_o \quad \therefore\ LR_a = 2r_o$$

$$L \times L \times r_a = 2r_o$$

$$L^2 = \frac{r_o}{r_a} \times 2$$

with $$r_o = 50000 \quad L^2 = \frac{100000}{r_a}$$

or $$L = \frac{\sqrt{100000}}{\sqrt{r_a}}$$

$$L = 316/\sqrt{r_a}$$

Central Battery Simplex with Primary Batteries. When a central primary battery is used, the secondary battery mileages are not approached in consequence of

two factors: (1) the use of a 2000$^{\omega}$ feed resistance, (2) the voltage drop in the primary battery due to internal resistance.

With 80 volts the following mileage limitations are usually applied, viz.—

For two circuits worked from a central primary battery, L (miles) $= 158/\sqrt{r_a}$.

For six circuits L (miles) $= 100/\sqrt{r_a}$.

Use of Hyperbolic Functions. In view of modern practice to use equivalent circuits based either on exponential or hyperbolic functions, it is necessary to point out that the variable factors incidental to problems in connection with overhead telegraphs are so diverse as to make it extremely difficult, not to say impossible, to arrive at an exact estimate of the actual conditions on an aerial telegraph wire, at any given moment.

So far as leakage is concerned, it will readily occur to one, that leakage is seldom uniformly distributed, and that as a matter of fact, where it exists to any extent, it may be lumped at one end, or possibly be distributed in two or more lumped portions.

It should be noticed that Tables 1 and 2 are based on results obtained from the use of three variable resistances, and that the development of the method results in relationships being established between the ratio of the insulation resistance to the measured conductor resistance and the percentage loss of perfect current, which it will be remembered is obtained by dividing the impressed voltage by the calculated conductor resistance. In other words, it is the steady value current obtained when the insulation of the line is infinitely great.

By this means, the use of the figure representing the insulation resistance per mile, was avoided, as it is considered this factor cannot be regarded as a constant per unit length for all values of the length, in the same

sense as that of resistance and capacity per mile. It is pointed out further that in the Kennelly formulae quoted, i.e.

$$a = b = R_1 \left(1 - \sqrt{1 - \frac{R_c}{R_i}}\right)$$

and

$$x = R_1 \sqrt{1 - \frac{R_c}{R_i}}$$

the only factors necessary in order to make up an equivalent circuit such as that shown in Fig. 733, are readings representing insulation resistance and conductor resistance. The constants per unit length are not involved, and therefore for any values of R_c and R_i an equivalent circuit from which the "sent" and "received" currents may be obtained, can be formed.

It may perhaps be pointed out that the limiting values of insulation resistance, conductivity resistance, sent and received currents, on a steady current value basis obtained as indicated, are in general agreement with the figures obtained under practical conditions.

It is not necessary here to explain the use of hyperbolic functions in the direct current case, but the instances of the application of these functions shown in the table on page 1153 will prove of interest.

A casual scrutiny of the tabulated figures obtained by applying the hyperbolic function to the circuit constants per unit length will reveal certain discrepancies in respect of the values of line currents and insulation resistances per mile. It will be observed that the discrepancies tend to disappear as the insulation resistance is increased to a point which would be comparable with the insulation resistance values proper to underground cables.

It should be noticed also that in the attenuation constants $\beta = \sqrt{rg}$, and the characteristic resistance

$Z_0 = \sqrt{r/g}$, the insulation resistance per mile, is in each case one of two factors determining the values of figures that form the basis of a number of desired values.

The conclusion that g cannot be regarded as a constant per unit length for all values of l, the length of aerial telegraph circuit, can hardly be gainsaid. For this reason it is considered that the direct current, hyperbolic function theory, is not suitable for use in connection with the ordinary problems associated with overhead telegraphs involving questions of voltage, battery power, etc., required in order to give satisfactory conditions of working.

APPLICATION OF THE DIRECT CURRENT CASE OF HYPERBOLIC FUNCTIONS TO GIVEN CONDITIONS ON OVERHEAD TELEGRAPHS

	a	*b*	*c*	*d*
l = length in miles of circuit	337	337	168·5	168·5
r = conductor resistances per mile	9	9	9	9
$l \times r$ = calculated conductor resistance	3033	3033	1517	1517
g = leakance per mile $\times 10^{-6}$	1	10	1	10
l/g = insulation resistance per mile ohm	1×10^6	1×10^5	1×10^6	1×10^5
$\beta = \sqrt{rg}$ = attenuation constant	0·003	0·0094	0·003	0·0094
$\theta = \beta l$ = attenuation factor or line angle	1·011	3·168	0·505	1·584
$Z_0 = \sqrt{r/g}$ = characteristic resistance.	3000	948	3000	948
$Z_1 = Z_0 \tanh \theta$ = surge resistance	2286	944	1389	872
$Z = Z_0 \coth \theta$ = sending end resistance	3900	951	6400	1042
E_1 = impressed voltage	120	120	120	120
R_l = receiving end resistance $= Z_0 \sinh \theta$	3530	10925	1577	2195
$I_1 = E_1/Z_0 \tanh \theta$ = sent current (mA)	52·5·	127·5	86·4	137
$I_2 = E_1/Z_0 \sinh \theta$ = received current (mA)	34	10·9	76·0	55
Value of $\frac{1}{2}(I_1 + I_2)$ (which should equal the perfect current) (mA)	43·25	69·2	81·2	96
Actual perfect current steady value = (mA) $E_1/l \times r$	39·5	39·5	79·1	79·1

The equivalent circuits obtained on the basis of $a = b = Z_o \tanh \theta_2$ and $x = Z_o/\sinh \theta$ are—

	a	*b*	*c*	*d*
$a = b = Z_0 \tanh \theta/_2$	1395	872	744	625
$x = Z_0/\sinh \theta$	2514	80	5706	408
$x \times l$ = insulation resistance per mile	847218	26960	1063572	68748

APPENDIX B

Examples on the Calculation of the Capacity of Circuits

The average value of the capacity K in microfarads of an aerial wire d mils in diameter, h mils above the ground, and l miles in length, may be obtained from Kempe's formula—

$$K = \frac{\cdot 0616\ l}{\log \frac{4h}{d}}$$

The number ·0616 is an experimentally determined constant and refers to wires erected in this country.

Example. What is the average capacity per mile of a 70 lb. bronze wire (diameter 66 mils) suspended 30 ft. above the ground ?

$$K = \frac{\cdot 0616 \times 1}{\log \frac{4 \times 360{,}000}{66}} = \frac{\cdot 0616}{4 \cdot 34} = \cdot 0142 \text{ m.f.}$$

The capacity K in electrostatic units of two co-axial cylinders l cm. long separated by a material having a specific capacity k, where d is the outside diameter of the inner, and D the inside diameter of the outer, cylinder is given by the formula—

$$K = \frac{l\,k}{2 \log_\epsilon \frac{D}{d}} \quad *$$

This formula may be applied to the case of a cable core, and taking, for example, a mile of $7\frac{1}{2}$ G.P. wire ($D = 174$ mils, $d = 50$ mils, and $k = 4 \cdot 2$), and putting the whole of the dimensions in centimetres, the capacity

$$= \frac{1760 \times 36 \times 2 \cdot 54 \times 4 \cdot 2}{2 \log_\epsilon \frac{\cdot 174 \times 2 \cdot 54}{\cdot 05 \times 2 \cdot 54}} \text{ electro-static units.}$$

Dividing by 9×10^5 to convert the result from electro-static units to microfarads, and also multiplying the denominator by

* The proof of this formula, involving a simple application of calculus, is given in the more advanced of the elementary treatises on electricity ; see J. J. Thomson's *Elements of the Mathematical Theory of Electricity and Magnetism*, page 93.

2·3026 to convert the natural into a common logarithm, the capacity is

$$= \frac{1760 \times 36 \times 2{\cdot}54 \times 4{\cdot}2}{2 \times 2{\cdot}3026 \times \log_{10} \frac{{\cdot}174}{{\cdot}05} \times 9 \times 10^5} = {\cdot}301 \text{ m.f.}$$

As a further illustration of this formula it will be interesting to apply it to the case of a screened conductor cable, and so determine the approximate specific capacity of the air and paper dielectric (all paper with exception of the small helical air space)—

$$k = \frac{K2 \log_\epsilon \frac{D}{d}}{l} \text{ where } K \text{ is in electro-static units.}$$

Substituting the figures for a 230 mil core having a 50 mil conductor, expressing the capacity of one mile of cable (·095 m.f.) in static units, and converting to common logarithms—

$$k = \frac{{\cdot}095 \times 9 \times 10^5 \times 2 \times 2{\cdot}3026 \times \log \frac{{\cdot}230 \times 2{\cdot}54}{{\cdot}050 \times 2{\cdot}54}}{1760 \times 36 \times 2{\cdot}54}$$

$= 1{\cdot}62$ as compared with the 4·2 of G.P.

A few simple problems based upon the formula for the capacity of two co-axial cylinders are given by way of conclusion—

Example 1. Find the relative capacities of two G.P. cables of equal length, A having a conductor 100 mils in diameter and a core of 200 mils, whilst B has a 200 mil conductor and a 500 mil core (log 2 = ·30103)—

$$A : B :: \frac{l\,k}{2 \log_\epsilon \frac{200}{100}} : \frac{l\,k}{2 \log_\epsilon \frac{500}{200}}$$

$$\text{i.e. } A : B :: \log \frac{10}{4} : \log 2$$

$$:: \log 10 - \log 4 : {\cdot}30103$$

But $\log 10 = 1$ and $\log 4 = 2 \log 2$

$\therefore A : B :: {\cdot}39794 : {\cdot}30103$

Example 2. Find the relative capacities of one mile of G.P. covered cable, A 80 mil conductor and 100 mil core and

B 120 mil conductor and 180 mil core, given log 2 = ·30103 and log 3 = ·47712—

$$A : B :: \log \frac{180}{120} : \log \frac{100}{80}$$

$$\text{or } A : B :: \log \frac{3}{2} : \log \frac{10}{8}$$

$$\text{or } A : B :: \log 3 — \log 2 : 1 - 3 \log 2$$

$$A : B :: \cdot 17609 : \cdot 09691$$

Example 3. Compare the working speeds of two G.P. cables of equal length A, having a 60 mil conductor with a total diameter of 100 mils, and B having a 100 mil conductor insulated with G.P. 85 mils thick (log 2 = ·30103 and log 3 = ·47712).

NOTE.—The working speeds may be assumed to be inversely proportional to the KRs, and as the lengths are equal the resistances are inversely proportional to the squares of the respective conductor diameters. The total diameter of the core B = 270 mils—

Let R_A, R_B, K_A, K_B, S_A, S_B, represent the resistances, capacities, and speeds of the cables.

$$R_A : R_B :: 100^2 : 60^2$$

$$K_A : K_B :: \log \frac{270}{100} : \log \frac{100}{60}$$

$$\text{or } K_A : K_B :: 3 \log 3 - 1 : 1 - (\log 3 + \log 2)$$

$$\text{i.e. } K_A : K_B :: \cdot 43136 : \cdot 22185$$

$$S_A : S_B :: K_B \times R_B : K_A \times R_A$$

$$S_A : S_B :: \cdot 22185 \times 100^2 : \cdot 43136 \times 60^2$$

$$\text{i.e. } S_A : S_B :: 2218 \cdot 5 : 1552 \cdot 9$$

Example 4. What must be the thickness of the G.P. insulation in order that a 100 mil conductor shall have the same capacity per unit length as a 120 mil conductor having a core diameter of 200 mils ?

$$\log \frac{200}{120} = \log \frac{x}{100}$$

$$\therefore \frac{200}{120} = \frac{x}{100}$$

$$\text{i.e. } x = 167 \text{ mils.}$$

The thickness of the G.P. covering is therefore—

$$\frac{167 - 100}{2} = 33\tfrac{1}{2} \text{ mils.}$$

APPENDIX C

International Symbols

Name of Quantity	Symb'l	Name of Quantity	Symb'l
Length	l	Conductance	G
Mass	m	Quantity of Electricity	Q
Time	t	Flux-density, electrostatic	D
Angles	α,β,γ	Capacity	C
Acceleration of gravity	g	Dielectric constant	ε
Work	A	Self-inductance	L
Energy	W	Mutual inductance	M
Power	P	Reactance	X
Efficiency	η	Impedance	Z
Number of turns in unit of time	n	Reluctance	S
Period	T	Magnetic flux	Φ
$2\pi/T$	ω	Flux-density, magnetic	B
Frequency	f	Magnetic field	H
Phase displacement	ϕ	Intensity of magnetization	J
Electro-motive force	E	Permeability	μ
Current	I	Susceptibility	κ
Resistance	R	Diff. of potential, electric	V
Resistivity	ρ	Magnetomotive force	$\mathcal{F}$

Name of Unit	Sign*	Name of Unit	Sign*
Ampere	**A**	Volt-coulomb	**VC**
Volt	**V**	Watt-hour	**Wh**
Ohm	**Ω**	Volt-ampere	**VA**
Coulomb	**C**	Ampere-hour	**Ah**
Joule	**J**	Milliampere	**mA**
Watt	**W**	Kilowatt	**kW**
Farad	**F**	Kilovolt-ampere	**kVA**
Henry	**H**	Kilowatt-hour	**kWh**
Megohm	**MΩ**	Microfarad	**μF**

* To be employed only after numerical values.

Prefixes

d = deci- (1/10)	**h** = hect(o)- (100)
c = centi- (1/100)	**k** = kilo- (1000)
m = milli- (1/1000)	**M** = meg(a)- (1,000,000)
μ = micr(o)- (1/1,000,000)	

Abbreviations for Weights and Measures

Length : m : km ; dm ; cm ; mm ; μ = 0,001 mm.
Surface : a ; ha ; m^2 ; km^2 dm^2 cm^2 ; mm^2.
Volume : l ; hl ; dl ; cl ; ml ; m^3 km^3 ; dm^3 ; cm^3 ; mm^3.
Mass : g ; t ; kg ; dg ; cg ; mg.

APPENDIX D

Useful Numbers

CONVERSION OF LENGTHS, WEIGHTS, ETC.

1 inch	=	2·54 centimetres	1 cm.	=	·3937 in.
1 yard	=	91·44 centimetres	1 metre	=	39·37 in.
1 mil	=	·0254 millimetres	1 mm.	=	39·37 mils.
1 sq. in.	=	6·4516 sq. cm.	1 sq. cm.	=	·1550 sq. in.
1 cubic in.	=	16·387 c. cm.	1 c. cm.	=	·06102 cubic in.
1 grain	=	·064799 gramme	1 gm.	=	15·432 grains
1 ounce	=	28·3495 grammes	1 gm.	=	·035274 oz.
1 pound (7000 grs.) = 453·59 gms.			1 gm.	=	·0022046 lb.

1 kilogramme or 1000 grammes = $2\frac{1}{5}$ lb. approx.

The gramme is the mass of a cubic centimetre (i.e. 1 millilitre) of water at a temperature of 4° C.

1 gallon of water occupies ·1604 cubic foot and weighs 10 lb. at 62° F.

1 cubic foot of ice weighs 57·5 lb.

CENTIGRADE AND FAHRENHEIT TEMPERATURES

To convert temperatures in the Fahrenheit scale to the corresponding Centigrade temperature deduct 32° and take $\frac{5}{9}$ of the result.

To convert Centigrade to Fahrenheit multiply by $\frac{9}{5}$ and add 32°

CIRCLES AND SPHERES

Let r = radius, and
d = diameter.

Circumference of a circle $= 2\,\pi\,r = \pi\,d$

Area ,, $= \pi\,r^2 = \frac{\pi}{4}\,d^2 = \cdot 7854\,d^2$

Surface of a sphere $= 4\,\pi\,r^2 = \pi\,d^2$

Volume ,, $= \frac{4}{3}\,\pi\,r^3 = \frac{\pi}{6}\,d^3$

CONSTANTS

$\pi = 3{\cdot}1415926536$ or $3{\cdot}1416$ approx., or roughly $\frac{22}{7}$

$\pi^2 = 9{\cdot}86965$; $\sqrt{\pi} = 1{\cdot}77245$; $\frac{1}{\pi} = {\cdot}31831$

Angle for which the arc is equal to the radius, 1 radian, $= 57{\cdot}2958° = 3437{\cdot}75' = 206265''$.

Base of natural logarithms 2·7183.

To convert common to natural logarithms multiply by 2·3026 and by ·4343 to convert natural to common logarithms.

Weight of 1 lb. in London = 445,000 dynes.

1 foot-pound = $1{\cdot}3562 \times 10^7$ ergs.

1 horsepower = 33,000 foot lb. per minute = 746 watts.

Value of the acceleration of gravity = 32·182 ft. or 981·17 cm. per sec., i.e. the force of gravity = 981·17 dynes.

HEAT PRODUCED BY A CURRENT

1 calorie = heat required to raise 1 gramme of water at 4° C. to 5° C.

Joule's equivalent $J = 42 \times 10^6$ ergs per calorie.

The heat H generated in a circuit of R ohms resistance by a current of C amperes in t seconds.

$$H = {\cdot}24\, C^2Rt = {\cdot}24\, ECt = {\cdot}24\, \frac{E^2}{R}\, t$$

1 kilowatt hour = 1000 watt-hours.
= 1·34 h.p. hours = 2,656,400 ft.-lb.
= 3,600,000 joules = 3440 heat units
= 366,848 kgm.
= ·229 lb. coal oxidized at 100 per cent efficiency = 3 lb. water evaporated at 212° F. = 22·9 lb. of water raised 62° to 212° F.

APPENDIX E

Table of Exponential and Hyperbolic Functions

x	ε^{x}	ε^{-x}	Sinh x	Cosh x	x	ε^{x}	ε^{-x}	Sinh x	Cosh x
0·00	1·0000	1·0000	0·0000	1·0000	0·50	1·6487	0·6065	0·5211	1·1276
0·01	1·0101	0·9901	0·0100	1·0001	0·51	1·6653	0·6005	0·5324	1·1329
0·02	1·0202	0·9802	0·0200	1·0002	0·52	1·6820	0·5945	0·5438	1·1383
0·03	1·0305	0·9704	0·0300	1·0005	0·53	1·6989	0·5886	0·5552	1·1438
0·04	1·0408	0·9608	0·0400	1·0008	0·54	1·7160	0·5828	0·5666	1·1494
0·05	1·0513	0·9512	0·0500	1·0013	0·55	1·7333	0·5770	0·5782	1·1551
0·06	1·0618	0·9418	0·0600	1·0018	0·56	1·7507	0·5712	0·5897	1·1609
0·07	1·0725	0·9324	0·0701	1·0025	0·57	1·7683	0·5655	0·6014	1·1670
0·08	1·0833	0·9231	0·0801	1·0032	0·58	1·7860	0·5599	0·6131	1·1730
0·09	1·0942	0·9139	0·0901	1·0041	0·59	1·8040	0·5543	0·6248	1·1792
0·10	1·1052	0·9048	0·1002	1·0050	0·60	1·8221	0·5488	0·6367	1·1855
0·11	1·1163	0·8958	0·1102	1·0061	0·61	1·8404	0·5434	0·6485	1·1919
0·12	1·1275	0·8869	0·1203	1·0072	0·62	1·8590	0·5379	0·6605	1·1984
0·13	1·1388	0·8781	0·1304	1·0085	0·63	1·8776	0·5326	0·6725	1·2051
0·14	1·1503	0·8694	0·1405	1·0098	0·64	1·8965	0·5273	0·6846	1·2119
0·15	1·1618	0·8607	0·1506	1·0113	0·65	1·9155	0·5221	0·6968	1·2188
0·16	1·1735	0·8521	0·1607	1·0128	0·66	1·9348	0·5169	0·7090	1·2258
0·17	1·1853	0·8437	0·1708	1·0145	0·67	1·9542	0·5117	0·7213	1·2330
0·18	1·1972	0·8353	0·1810	1·0162	0·68	1·9739	0·5066	0·7336	1·2403
0·19	1·2093	0·8270	0·1911	1·0181	0·69	1·9937	0·5016	0·7461	1·2477
0·20	1·2214	0·8187	0·2013	1·0201	0·70	2·0138	0·4966	0·7586	1·2552
0·21	1·2337	0·8106	0·2115	1·0221	0·71	2·0340	0·4916	0·7712	1·2628
0·22	1·2461	0·8025	0·2218	1·0243	0·72	2·0544	0·4868	0·7838	1·2706
0·23	1·2586	0·7945	0·2320	1·0266	0·73	2·0751	0·4819	0·7966	1·2785
0·24	1·2712	0·7866	0·2423	1·0289	0·74	2·0960	0·4771	0·8094	1·2865
0·25	1·2840	0·7788	0·2526	1·0314	0·75	2·1170	0·4724	0·8223	1·2947
0·26	1·2969	0·7711	0·2629	1·0340	0·76	2·1383	0·4677	0·8353	1·3030
0·27	1·3100	0·7634	0·2733	1·0367	0·77	2·1598	0·4630	0·8434	1·3114
0·28	1·3231	0·7558	0·2837	1·0395	0·78	2·1815	0·4584	0·8615	1·3199
0·29	1·3364	0·7483	0·2941	1·0423	0·79	2·2034	0·4538	0·8748	1·3286
0·30	1·3499	0·7408	0·3045	1·0453	0·80	2·2255	0·4493	0·8881	1·3374
0·31	1·3634	0·7334	0·3150	1·0484	0·81	2·2479	0·4449	0·9015	1·3464
0·32	1·3771	0·7261	0·3255	1·0516	0·82	2·2705	0·4404	0·9150	1·3555
0·33	1·3910	0·7189	0·3360	1·0549	0·83	2·2933	0·4361	0·9286	1·3647
0·34	1·4049	0·7118	0·3466	1·0584	0·84	2·3164	0·4317	0·9423	1·3740
0·35	1·4191	0·7047	0·3572	1·0619	0·85	2·3397	0·4274	0·9561	1·3835
0·36	1·4333	0·6977	0·3678	1·0655	0·86	2·3632	0·4232	0·9700	1·3932
0·37	1·4477	0·6907	0·3785	1·0692	0·87	2·3869	0·4190	0·9840	1·4029
0·38	1·4623	0·6839	0·3892	1·0731	0·88	2·4109	0·4148	0·9981	1·4128
0·39	1·4769	0·6771	0·4000	1·0770	0·89	2·4351	0·4107	1·0122	1·4229
0·40	1·4918	0·6703	0·4108	1·0811	0·90	2·4596	0·4066	1·0265	1·4331
0·41	1·5068	0·6637	0·4216	1·0852	0·91	2·4843	0·4025	1·0409	1·4434
0·42	1·5220	0·6571	0·4325	1·0895	0·92	2·5093	0·3985	1·0554	1·4539
0·43	1·5373	0·6505	0·4434	1·0939	0·95	2·5345	0·3946	1·0700	1·4645
0·44	1·5527	0·6440	0·4543	1·0984	0·94	2·5600	0·3906	1·0847	1·4753
0·45	1·5683	0·6376	0·4653	1·1030	0 95	2 5857	0·3867	1·0995	1·4682
0·46	1·5841	0·6313	0·4764	1·1077	0·96	2·6117	0·3829	1·1144	1·4973
0·47	1·6000	0·6250	0·4875	1·1125	0·97	2·6379	0·3791	1·1294	1·5085
0·48	1·6161	0·6188	0·4987	1·1174	0·98	2·6645	0·3753	1·1446	1·5200
0·49	1·6323	0·6126	0·5099	1·1225	0·99	2·6912	0·3716	1·1598	1·5314

x	ε^{x}	ε^{-x}	Sinh x	Cosh x	x	ε^{x}	ε^{-x}	Sinh x	Cosh x
1·00	2·7183	0·3679	1·1752	1·5431	1·60	4·9530	0·2019	2·3576	2·5775
1·01	2·7456	0·3642	1·1907	1·5549	1·61	5·0028	0·1999	2·4015	2·6014
1·02	2·7732	0·3606	1·2063	1·5669	1·62	5·0531	0·1979	2·4276	2·6255
1·03	2·8011	0·3507	1·2220	1·5790	1·63	5·1039	0·1959	2·4540	2·6499
1·04	2·8292	0·3535	1·2379	1·5913	1·64	5·1552	0·1940	2·4806	2·6746
1·05	2·8577	0·3499	1·2539	1·6038	1·65	5·2070	0·1921	2·5075	2·6995
1·06	2·8864	0·3465	1·2700	1·6164	1·66	5·2593	0·1901	2·5346	2·7247
1·07	2·9154	0·3430	1·2861	1·6292	1·67	5·3122	0·1883	2·5620	2·7502
1·08	2·9447	0·3396	1·3023	1·6921	1·68	5·3656	0·1864	2·5900	2·7760
1·09	2·9743	0·3362	1·3190	1·6553	1·69	5·4195	0·1845	2·6175	2·8020
1·10	3·0042	0·3329	1·3357	1·6685	1·70	5·4740	0·1827	2·6456	2·8283
1·11	3·0344	0·3297	1·3524	1·6820	1·71	5·5290	0·1809	2·6741	2·8549
1·12	3·0649	0·3263	1·3693	1·6956	1·72	5·5845	0·1791	2·7027	2·8818
1·13	3·0957	0·3230	1·3863	1·7093	1·73	5·6407	0·1773	2·7317	1·9090
1·14	3·1268	0·3198	1·4035	1·7233	1·74	5·6973	0·1755	2·7609	2·9364
1·15	3·1582	0·3166	1·4208	1·7374	1·75	5·7546	0·1738	2·7904	2·9642
1·16	3·1899	0·3135	1·4382	1·7517	1·76	5·8124	0·1720	2·8202	2·9922
1·17	3·2220	0·3104	1·4558	1·7662	1·77	5·8709	0·1703	2·8503	3·0206
1·18	3·2554	0·3073	1·4736	1·7808	1·78	5·9299	0·1686	2·8806	3·0493
1·19	3·2871	0·3042	1·4914	1·7957	1·79	5·9895	0·1670	2·9113	3·0782
1·20	3·3201	0·3012	1·5095	1·8107	1·80	6·0497	0·1653	2·9422	3·1075
1·21	3·3535	0·2982	1·5276	1·8258	1·81	6·1101	0·1637	2·9734	3·1371
1·22	3·3872	0·2952	1·5460	1·8412	1·82	6·1719	0·1620	3·0049	3·1669
1·23	3·4212	0·2923	1·5645	1·8568	1·83	6·2339	0·1604	3·0367	3·1972
1·24	3·4556	0·2894	1·5831	1·8725	1·84	6·2965	0·1588	3·0689	3·2277
1·25	3·4903	0·2865	1·6019	1·8884	1·85	6·3598	0·1572	3·1013	3·2585
1·26	3·5254	0·2837	1·6209	1·9045	1·86	6·4237	0·1557	3·1340	3·2897
1·27	3·5609	0·2808	1·6400	1·9208	1·87	6·4883	0·1541	3·1671	3·3212
1·28	3·5966	0·2780	1·6593	1·9373	1·88	6·5535	0·1526	3·2005	3·3531
1·29	3·6328	0·2753	1·6788	1·9540	1·89	6·6194	0·1511	3·2342	3·3852
1·30	3·6693	0·2725	1·6984	1·9709	1·90	6·6859	0·1496	3·2682	3·4177
1·31	3·7062	0·2698	1·7182	1·9880	1·91	6·7531	0·1481	3·3025	3·4506
1·32	3·7434	0·2671	1·7381	2·0053	1·92	6·8210	0·1466	3·3372	3·4838
1·33	3·7810	0·2645	1·7583	2·0228	1·93	6·8895	0·1452	3·3722	3·5173
1·34	3·8190	0·2619	1·7786	2·0404	1·94	6·9588	0·1437	3·4075	3·5512
1·35	3·8574	0·2592	1·7991	2·0583	1·95	7·0287	0·1423	3·4432	3·5855
1·36	3·8962	0·2567	1·8200	2·0764	1·96	7·0993	0·1409	3·4792	3·6201
1·37	3·9354	0·2541	1·8406	2·0947	1·97	7·1707	0·1395	3·5156	3·6551
1·38	3·9749	0·2516	1·8617	2·1132	1·98	7·2427	0·1381	3·5523	3·6904
1·39	4·0149	0·2491	1·8829	2·1320	1·99	7·3155	0·1367	3·5894	3·7261
1·40	4·0552	0·2466	1·9043	2·1509	2·00	7·3891	0·1353	3·6269	3·7622
1·41	4·0960	0·2441	1·9259	2·1701	2·1	8·1662	0·1225	4·0219	4·1443
1·42	4·1371	0·2417	1·9477	2·1894	2·2	9·0250	0·1108	4·4571	4·5679
1·43	4·1787	0·2393	1·9697	2·2090	2·3	9·9742	0·1003	4·9370	5·0372
1·44	4·2207	0·2369	1·9919	2·2288	2·4	11·0232	0·0907	5·4662	5·5570
1·45	4·2631	0·2346	2·0143	2·2488	2·5	12·1825	0·0821	6·0502	6·1323
1·46	4·3060	0·2322	2·0369	2·2691	2·6	13·4637	0·0743	6·6947	6·7690
1·47	4·3492	0·2299	2·0597	2·2896	2·7	14·8797	0·0672	7·4063	7·4735
1·48	4·3930	0·2276	2·0827	2·3103	2·8	16·4446	0·0608	8·1919	8·2527
1·49	4·4371	0·2254	2·1059	2·3312	2·9	18·1741	0·0550	9·0596	9·1146
1·50	4·4817	0·2231	2·1293	2·3524	3·0	20·0855	0·0498	10·0179	10·0677
1·51	4·5267	0·2200	2·1529	2·3738	3·1	22·1980	0·0451	11·0765	11·1215
1·52	4·5722	0·2187	2·1768	2·3955	3·2	24·5325	0·0408	12·2459	12·2866
1·53	4·6182	0·2165	2·2008	2·4174	3·3	27·1126	0·0369	13·5379	13·5747
1·54	4·6646	0·2144	2·2251	2·4305	3·4	29·9641	0·0334	14·9654	14·9987
1·55	4·7115	0·2123	2·2496	2·4619	3·5	33·1155	0·0302	16·5426	16·5728
1·56	4·7588	0·2101	2·2743	2·4845	3·6	36·5982	0·0273	18·2885	18·3128
1·57	4·8067	0·2081	2·2993	2·5074	3·7	40·4473	0·0247	20·2113	20·2360
1·58	4·8550	0·2060	2·3245	2·5305	3·8	44·7012	0·0224	22·3394	22·3618
1·59	4·9038	0·2039	2·3499	2·5538	3·9	49·4024	0·0202	24·6911	24·7113

x	ε^x	ε^{-x}	Sinh x	Cosh x	x	ε^x	ε^{-x}	Sinh x	Cosh x
4·0	54·5982	0·0183	27·2899	27·3082	5·7	298·867	0·0034	149·432	149·435
4·1	60·3403	0·0166	30·1619	30·1784	5·8	330·300	0·0030	165·148	165·151
4·2	66·6863	0·0150	33·3357	33·3507	5·9	365·037	0·0027	182·517	182·520
4·3	73·6998	0·0136	36·8431	36·8567					
4·4	81·4509	0·0123	40·7193	40·7316	6·0	403·429	0·0025	201·713	200·716
4·5	90·0171	0·0111	45·0030	45·0141	6·1	445·858	0·0022	222·928	222·930
4·6	99·4843	0·0101	49·7371	49·7472	6·2	492·749	0·0020	246·373	246·375
4·7	109·947	0·0091	54·9690	54·9781	6·3	544·572	0·0018	272·285	272·287
4·8	121·510	0·0082	60·7511	60·7593	6·4	601·845	0·0016	300·922	300·923
4·9	134·290	0·0075	67·1412	67·1486	6·5	665·141	0·0015	332·570	332·571
					6·6	735·095	0·0014	367·547	367·548
5·0	148·413	0·0067	74·2032	74·2099	6·7	812·406	0·0012	406·202	406·203
5·1	164·022	0·0061	82·0079	82·0140	6·8	897·847	0·0011	448·923	448·924
5·2	181·272	0·0055	90·6333	90·6388	6·9	992·275	0·0010	496·137	496·138
5·3	200·337	0·0050	100·167	100·171					
5·4	221·406	0·0045	110·701	110·705	7·0	1096·60	0·0009	548·316	548·317
5·5	244·692	0·0041	122·344	122·348	8·0	2981·00	0·00034	1490·48	1490·48
5·6	270·426	0·0037	135·211	135·215					

NOTES

$$\varepsilon = 1 + \frac{1}{\underline{|1}} + \frac{1}{\underline{|2}} + \frac{1}{\underline{|3}} + \frac{1}{\underline{|4}} \cdot \cdot \cdot = 2{\cdot}71828$$

$$\varepsilon^x = \cosh x + \sinh x$$

$$\varepsilon^{-x} = \cosh x - \sinh x$$

$$\cosh^2 x - \sinh^2 x = 1$$

$$\cosh x = 1 + \frac{x^2}{\underline{|2}} + \frac{x^4}{\underline{|4}} + \frac{x^6}{\underline{|6}} \cdot \cdot \cdot \cdot$$

$$\sinh x = x + \frac{x^3}{\underline{|3}} + \frac{x^5}{\underline{|5}} + \frac{x^7}{\underline{|7}} \cdot \cdot \cdot \cdot$$

$$\cosh x = \frac{\varepsilon^x + \varepsilon^{-x}}{2} \; ; \; \sinh x = \frac{\varepsilon^x - \varepsilon^{-x}}{2}$$

$$\tanh x = \frac{\sinh x}{\cosh x} = \frac{\varepsilon^x - \varepsilon^{-x}}{\varepsilon^x - \varepsilon^{-x}}$$

$$\coth x = \frac{1}{\tanh x} = \frac{\varepsilon^x + \varepsilon^{-x}}{\varepsilon^x - \varepsilon^{-x}}$$

$$\sinh (a \pm b) = \sinh a \cosh b \pm \cosh a \sinh b$$

$$\cosh (a \pm b) = \cosh a \cosh b \pm \sinh a \sinh b$$

APPROXIMATIONS

If $x < \cdot 05$, $\varepsilon^{\pm x} = 1 \pm x$.

If $x < \cdot 2$, $\varepsilon^{\pm x} = 1 \pm x + \frac{1}{2}x^2$.

If x is very small, $\cosh x = 1$.

Second approximation: $\cosh x = 1 + \frac{x^2}{4}$

For $x > 5$, $\sinh x = \cosh x = \frac{1}{2}\varepsilon^x$.

APPENDIX F

Standard Wire Gauge

No. S. W. G.	Diameter			No. S. W. G.	Diameter		Area in square inches
	Mils. (·001 inch)	Milli-metres	Area in square inches		Mils. (·001 inch)	Milli-metres	
7/0	500·	12·70	·1963	23	24·	·610	·000452
6/0	464·	11·78	·1691	24	22·	·559	·000380
5/0	432·	10·97	·1466	25	20·	·508	·000314
4/0	400·	10·16	·1257	26	18·	·457	·000254
3/0	372·	9·45	·1087	27	16·4	·417	·000211
2/0	348·	8·84	·0951	28	14·8	·376	·000172
0	324·	8·23	·0824	29	13·6	·345	·000145
1	300·	7·62	·0707	30	12·4	·315	·000121
2	276·	7·01	·0598	31	11·6	·295	·000106
3	252·	6·40	·0499	32	10·8	·274	·0000916
4	232·	5·89	·0423	33	10·0	·254	·0000785
5	212·	5·38	·0353	34	9·2	·234	·0000665
6	192·	4·88	·0290	35	8·4	·213	·0000554
7	176·	4·47	·0243	36	7·6	·193	·0000454
8	160·	4·06	·0201	37	6·8	·173	·0000363
9	144·	3·66	·0163	38	6·0	·152	·0000283
10	128·	3·25	·0129	39	5·2	·132	·0000212
11	116·	2·95	·0106	40	4·8	·122	·0000181
12	104·	2·64	·0085	41	4·4	·112	·0000152
13	92·	2·34	·00665	42	4·0	·102	·0000126
14	80·	2·03	·00503	43	3·6	·0914	·0000102
15	72·	1·83	·00407	44	3·2	·0813	·00000804
16	64·	1·63	·00322	45	2·8	·0711	·00000616
17	56·	1·42	·00246	46	2·4	·0610	·00000452
18	48·	1·22	·00181	47	2·0	·0508	·00000314
19	40·	1·016	·00126	48	1·6	·0406	·00000201
20	36·	·914	·00102	49	1·2	·0305	·00000113
21	32·	·813	·000804	50	1·0	·0254	·000000785
22	28·	·711	·000616				

APPENDIX G

Examination Syllabuses

DEPARTMENTAL TECHNICAL EXAMINATION BEFORE PROMOTION (TELEGRAPHS)

The syllabus for the Departmental Technical Examination has been revised in order to bring it into closer relation with modern developments in Telegraphy. The examinations will include the following subjects—

1. Elementary knowledge of the principles of construction of aerial and underground lines for telegraph purposes.
2. General plan of the wiring of telegraph offices.
3. Principle and use of test boards and testing appliances including the Wheatstone Bridge and the Megger.
4. Crossing and looping of wires.
5. Making up special circuits in cases of emergency.
6. Tracing and localizing of faults in apparatus and on line wires.
7. Secondary cell working and the methods of increasing and decreasing battery power on a circuit.
8. Practical methods of measuring the electro-motive force and internal resistance of batteries.
9. Joining up and adjusting telegraph apparatus including duplex, quadruplex, and Wheatstone sets. (Officers in the Central Telegraph Office, Cable Room, will not be required to take this section.)
10. Central battery (simplex and duplex).
11. A knowledge of printing telegraphs, at offices where these systems are in use. (For officers in the Central Telegraph Office, the examination in this section will be of a more detailed character and for those in the Central Telegraph Office Cable Room, it will, in addition, include " Elementary Principles of Submarine Cable Working.")
12. Repeaters, at offices where these are in use.
13. Concentrators.
14. Superposition ; telegraph on telegraph ; telegraph on telephone, etc.
15. Practical knowledge of trunk telephone line working at offices where telegraph force assists in trunk telephone working and testing.
16. Practical knowledge of telephone switchboards and of the apparatus used in connection therewith at offices where telegraph force assists in trunk telephone working and testing.

The following is a synopsis and general guide to the subjects included under the various headings. It is issued officially by the Engineer-in-Chief as a general guide and is not intended to be exhaustive. The numbered paragraphs refer to the corresponding items of the syllabus.

1. *Aerial.* (*a*) Preservative treatment of poles. (*b*) Pole fittings. (*c*) Types of wire used as conductors, and their electrical and mechanical properties.

Underground. (*a*) Types of single and multiple-way conduits. (*b*) Types of cable used for telegraph working. (*c*) Desiccation of air-space dry-core cables.

General. (*a*) Relative advantages of aerial and underground circuits. (*b*) Methods of eliminating inductive interference on telegraph lines. (*c*) Merits of loop and single wire working.

2. (*a*) Methods of leading-in aerial and underground lines to instruments. (*b*) Apparatus used for the protection of telegraph offices from power currents and lightning discharges. (*c*) Methods of cable distribution from test board to instrument tables. (*d*) Earth-wiring of telegraph instrument rooms.

3. (*a*) General description of standard patterns of telegraph test boards. (*b*) Terminating and cross-connecting arrangements. (*c*) Test tablets, detectors and galvanometers, and use of same. (*d*) Theory, description, and use of Wheatstone Bridge, Megger, and Bridge Megg r. Simple tests for the measurement of conductor and insulation resistance.

4. Maintenance of communication between offices in cases of breakdown ; crossing out faulty sections, co-operation with testing offices, substitution of metallic loop for single-wire working.

5. (*a*) " News " Wheatstone circuits for transmitting or receiving, worked from primary cells. (*b*) Special sets for simplex sounder, key working, at an intermediate office. (*c*) Practical methods of overcoming interruptions to service caused by earth currents.

6. (*a*) Tracing of simple faults in signalling keys, sounders, relays, galvanometers, resistance coils, condensers, Wheatstone transmitters, and receivers. (*b*) Practical tests for the localization of disconnections, earths, and contacts on line wires.

7. (*a*) Chemical action. (*b*) Charging. (*c*) Capacity and efficiency. (*d*) Testing. (*e*) Protective arrangements. (*f*) Description and use of distribution and fuse cases. (*g*) Distribution of battery power in telegraph offices. (*h*) Universal battery system. (*i*) Advantages of secondary over primary cell working.

8. (*a*) Simple tests for the measurement of voltage, current strength, and internal resistance of batteries. (*b*) Simple numerical examples in connection therewith.

9. (*a*) The principles and operation of apparatus used on simplex, duplex, quadruplex, and Wheatstone automatic sets. (*b*) Skeleton diagrams of, and tracing paths of currents in (i) single current simplex, (ii) double current simplex and duplex, (iii) Wheatstone automatic simplex and duplex, (iv) quadruplex, increment and decrement. (*c*) Methods of adjusting and balancing apparatus to

ensure efficient working. (*d*) Battery power required for working different classes of circuits.

10. (*a*) Advantages of system. (*b*) Skeleton diagrams of, and tracing paths of currents in (i) omnibus circuits, (ii) Hay, and Vyle and Smart duplex systems.

11. *Baudot System.* (*a*) General principles of multiplex working. (*b*) Skeleton diagrams of circuit connections. (*c*) Maintenance of phase relationship between distributor brushes. (*d*) Function of vibrator and phonic wheel, speed adjustments. (*e*) Action of Baudot keyboard; function of cadence. (*f*) Action of Baudot receiver, selecting and printing, function of brake mechanism and moderator, speed adjustments. (*g*) Functions of various rings and segments of distributor plates, orientation and setting of brushes. (*h*) Principle of action of keyboard perforators and transmitters. (*i*) Principles of three-station Baudot working (re-transmitters).

Hughes. (*a*) Principles of action. (*b*) Keyboard. (*c*) Printing mechanism. (*d*) Speed regulation. (*e*) Unison of type wheels. (*f*) Adjustment of electro-magnet. (*g*) Arrangements for duplex working.

Start-stop System. Morkrum Teletype 1*a and* 2*a., Creed Start-stop.* (*a*) General principles of action of transmitting and printing mechanism. (*b*) Circuit connections, simplex and duplex. (*c*) Working adjustments.

Creed Apparatus on Wheatstone Circuits. Elementary principles of the action of Creed re-perforators and printers fitted on Wheatstone circuits.

Submarine Cable Working. (*a*) Skeleton diagram of duplex connections. (*b*) General make-up of artificial line for long submarine cables. (*c*) Functions of signalling and reading condensers. (*d*) Principles of action and operation of cable signalling key, cable transmitter, syphon recorder, and direct writer. (*e*) Types of submarine cables.

12. General description and operation of repeaters, "simplex" and "duplex."

13. General description of working of concentrator switchboards for telegraph purposes, including "clearing" arrangements.

14. (*a*) Elementary description and skeleton diagrams of different methods adopted. (*b*) Conditions required for satisfactory superposition.

15. Elementary principles of trunk telephone working.

16. (*a*) Working of trunk telephone switchboards at minor exchanges. (*b*) The principles and operation of transmitter, receiver, induction coil, keys, switch-springs, indicators, relays, condensers, magneto generator, magneto and trembler bells.

II.—CITY AND GUILDS OF LONDON INSTITUTE

37 B.—Telegraphy

Candidates should bring slide-rules to the examination. Mathematical tables, when required, will be provided by the Institute. Suitable illustrative diagrams should be systematically introduced into answers.

GRADE I

The examination will be based on the following syllabus—

1. *Magnets.* The construction of permanent and electro-magnets; simple calculations relating to electro-magnets.

2. *Batteries.* Primary batteries; Leclanché type, wet and dry; their composition and chemistry. Simple calculations relating to special combinations of cells; potential drop in a battery and the effect on circuits connected thereto; testing and maintenance of Leclanché primary batteries. Secondary batteries; construction and application to telegraph working.

3. *Telegraph Instruments.* Wheatstone's A.B.C., single needle, sounder (ordinary and polarized). Wheatstone transmitter, receiver and perforator; keys, relays, line galvanometers, condensers and resistance coils. The principles, construction and application of all the above. Shunts and their uses.

4. *Telegraph Lines: Overhead.* Preservative treatment of poles and timber; pole fittings, brackets, insulators, various types and use of; erection of poles. Different types of wire, properties and use of hard drawn copper, cadmium copper, bronze, iron and steel. Methods of erecting wires; aerial cable, types and use and methods of erecting; insulated wires used in overhead construction. Methods of leading in.

Underground.—Iron and earthenware, single and multiple way conduits; pipe bends and couplings; troughing. Manhole and joint box construction. Types of cable used for main and local circuits; jointing wires, twisted, soldered, and sleeve joints; numbering wires and joints; drying joints; plumbing; pressure testing and drying cables.

5. *Internal Wiring.* Termination of external cables on main frames. Internal wiring of large telegraph offices.

6. *Telegraph Systems.* The simpler systems of manual telegraphy including single and double current duplex; the use of one battery for a large telegraph office. Central battery telegraph systems. Elementary description of the Wheatstone Automatic System.

7. *Testing Instruments.* Detectors; galvanometers; Wheatstone bridge. Simple tests for loop and insulation resistance, disconnections, earths, and contacts. Simple fault localization.

8. *Protective Devices.*—Methods of protecting lines, submarine cables and apparatus from (*a*) lightning; (*b*) power circuit currents.

9. *Miscellaneous.* Earth currents; nature of and methods of preventing disturbance therefrom.

FINAL EXAMINATION

A candidate who passes the Final Examination may claim exemption from Part II. of the Examination for Associate Membership of the Institution of Electrical Engineers.

More difficult questions may be set on the subjects of Grade I, and in addition questions will be set on such subjects as the following—

1. *Electric and Magnetic Units.*—Absolute and practical.

2. *Secondary Cells.*—Chemistry of, first charge, capacity, and efficiency, testing; maintenance, including method of charging and day to day care of installations. Protective and distribution arrangements including consideration of sizes of cells, cables, and fuses.

3. *External Plant Construction.* Suitability and testing of materials employed; stresses on poles; static and kinetic stresses on wires; law connecting dip or sag and stress; factors of safety. Poles; erection of heavy poles, spliced poles, terminal poles. Aerial cable lines, design and construction. Construction of manholes and leading-in chambers; acceptance tests for materials. Design, manufacture, laying and repairing dry core and submarine cables. Modern development in cable design; acceptance tests for cable. Precautions against and testing for electrolytic damage to cable sheath; precautions against interference from power and electric lighting systems; bonding. Divided and multiple way joints; methods of drying cables; maintenance testing.

4. *Telegraph Instruments.* General principle of the construction of Creed, Hughes, Baudot, Undulator, and Tele-printing apparatus, cable relays and vibrating relays. Keyboard perforators. Maintenance, adjustment and tests of telegraph instruments.

5. *Telegraph Circuits.* Quadruplex, Multiplex, Wheatstone Automatic, modern type-printing and concentration systems. Comparative speeds of telegraph systems.

6. *Telegraph Repeaters.* Principle of simplex, duplex, forked, divided, quadruplex, and high speed repeaters.

7. *Telegraph Transmission Theory.* Limiting transmission factors as regards speed of working. Effects of conductance, leakance, capacity and inductance. Attenuation and distortion.

8. *Telegraph Transmission Systems.* Voice frequency telegraphy. High frequency carrier telegraphy. General principles of facsimile telegraphy. Simultaneous telegraphy and telephony (superposed and composited working).

9. *Testing.* Theory, description and use of moving coil galvanometer (needle and reflecting types); megger; bridge

megger; ballistic galvanometer; ammeter; voltmeter. Precision testing for the localization of faults in underground cables. Measurement of resistance and E.M.F. of cells; routine maintenance testing of long distance lines.

10. *Miscellaneous.* Calculations involving Kirchhoff's and Maxwell's laws. Simple formulae for winding of electromagnets.

INDEX

NOTES

1. All diagrams of connections are indexed under Connections.
2. Everything relating to Secondary cell working and the Universal Battery System is shown under Universal Battery System.
3. All problems and numerical examples are indexed under Numerical Examples.
4. All Tables are indexed under Tables.
5. All tests involving Measurements are indexed under " Measurements of . . ."

A and B wires, 1025, 1027
A.B.C. Wheatstone, 480
—— communicator, 484
—— indicator and bell, 481
—— leak and series working, 486
—— Steljes recorder, 487
Absorbing resistance, 367
Absorption, 167, 972
Accumulator. See Secondary Cells
Adjusting resistance, 798
Aerial cable, 1118
Aerial lines, 1060
  alterations, 1110
  Bosun's chair, use of, 1100
  bracket routes, 1116
  carrying capacity of, 1081
  connected to U.G., 1052
  construction of, 1094
  dimensions of poles, 1078
  factor of safety, 1078
  heavy angles in, 1113
  leading-in, 1068
  roof standards, 1120
  safety belt, use, 1100
  surveying, 1112
  use of interruption cable, 1111
  v. underground, 994
  wind pressure on, 1079
  wiring, 1098
Air. See dry air
Air space cable. See Cable
Alarm repeater No. 3, 840
Alternating currents, 190, 196
  capacity and inductance, 209
  frequency, periodicity 202
  generator, 197
  impedance, 205
  lag and lead, 204
  power, 205
  reactance, 206
  wave, 200
Amalgamation, 26
ammeters, 126, 127
Ampere, 15
Ampere-hour, 38
—— turn, 83
Anchor iron, 1019
Anode, 19, 850
Apparatus and line res., 89
Arm bolts, 1063
Armoured cable, 1002
Arms, 1062
  at heavy angles, 1113
  earth-wiring, 1076
  extension, 1110
  preservation, 1062
  sizes, 1062
  spacing on poles, 1063
Arresters. See Lightning Protectors
Arrival curve, 1122
Astatic combinations, 133, 135
Automatic cut-out, 780
——systems. See Baudot Murray, Siemens Wheatstone
Autoplex. See Baudot Automatic
Auto-switch, 810

Batteries, cells—
  arrangement of, 42
  capacity of, 39, 40
  characteristics, 36, 40
  Clark, 34
  elements and poles, 18
  ideal characteristics, 36
  joining up, 42, 45, 51
  Leclanché, 26
  limits of E.M.F. and *r*, 39
  number required, 49
  open and closed circuit potential, 6
  primary, 23
  secondary, 734

THE A.T.M. UNIVERSAL DUPLEX UNIT R.86

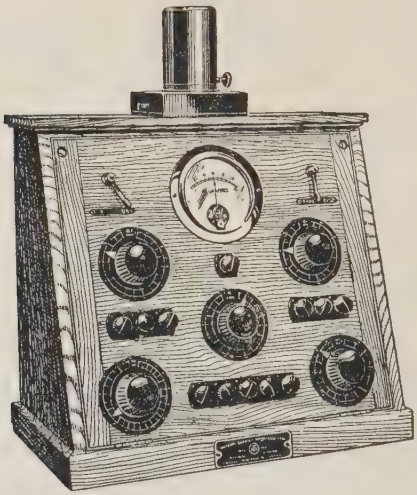

"UNIVERSAL" BECAUSE SIMPLE ADJUSTMENT RENDERS IT SUITABLE FOR ANY OF THE FOLLOWING CONDITIONS:—

1. UP STATION OPERATION.
2. DOWN STATION OPERATION.
3. PRIMARY BATTERY OPERATION.
4. SECONDARY BATTERY OPERATION.

EITHER 1 OR 2 CAN BE USED WITH 3 OR 4, THUS SATISFYING ANY REQUIREMENTS MET IN PRACTICE.

Send for Pamphlet No. 82 to :—

AUTOMATIC TELEPHONE MFG. Co. Ltd.
Strowger Works, Liverpool

London Office :—
NORFOLK HOUSE, NORFOLK ST., STRAND, W.C.2

ATM
REGD TRADE MARK

Batteries, cells (*contd.*)
simple voltaic, 10, 23
size, E.M.F., *r*, and capacity, 38
standard, 34, 111
voltaic, 10, 23
wrongly connected, 48
Battery coils, 322
power calculation, 49
res. and speed, 1122
room, 756
testing, 171
—— coils, 175
—— P.O. test, 173
Baudot, 517
automatic, 601
Booth-Willmot perforator, 602
brake circuit, 549
brush arms, 571
brushes, 573
code, 526
combiner wheel, 536
connection case, 596
correcting magnet, 581
—— —— adjustment, 582
Creed multiplex printer, 620
direct motor driven, 562
distributor, 555
—— automatic, 604
—— frame and plates, 566
—— governor, 559
—— —— theory, 561
divided circuits, 587
duplex, 583
epicyclic gear, 578
G. relay circuits, 584
Grunenwald system, 554
intermediate circuits, 591
keyboard, 526
—— adjustment, 530
—— perforator, 607
line retardation, 574
Mendonça governor, 562
—— —— adjustment, 566
—— —— theory, 565
metal storage transmitter, 600
morning procedure, 598
Morkrum multiplex, 631
—— —— printer, 627
multiplex principle, 521
—— synchromism, 575
—— unison, 575
Murray code, 614
—— distributor and case, 619
—— keyboard perforator, 614
—— multiplex, 612
—— re-perforator, 618
—— transmitter, 616
phonic wheel, 556
receiver, 532
Baudot (*contd.*)
receiver adjustment, 548, 552
—— governor, 547
—— rapide, 536
—— skeleton rapide, 536
—— speed control, 546
repeatered circuits, 584
retransmitter, 589
—— adjustment, 590
rotary repeaters, 627
simplex, 594
—— two line, 596
testers, 608
—— for auto baudot, 610
vibrator, 557
—— adjustment, 559
Western electric multiplex, 622
—— —— transmitter, 604
Beckman, Dr., 96
Bias, 237, 407, 408
Bobbin, winding of, 89
Bonding, 1030, 1034
Booth, Lt.-Col. A. C., 366. 521, 601, 602, 819, 822, 830, 831, 837
B.O.T. unit, 18
Boxes. See Joint Box
Brackets and bracket routes, 1068, 1116
Bridge duplex, 463
D.C., 466
—— balancing, 470
—— compensation circuit, 470
—— duplex coils, 466
—— G relay, 474
—— intermediate position of keys, 466, 470
—— reading condenser, 473
—— signalling condenser, 470
Bridge Megger, 167
Bridging coils, 361, 890
Britannia joint, 1074
Bullers clips, 1035
bonding bolts, 1034
stay rod, 1089

Cable bearer, brackets, 1020
distribution head, 1053
—— plug, 1052
drums, 1040
grip, 1040
silk and cotton, 906, 944
Cable paper core, 1023
A and B wires, 1025
aerial, 1118
bonding of, 1034
capacity of, 1024
composite, 1029
corrosion of sheath, 1029
desiccation, 1048

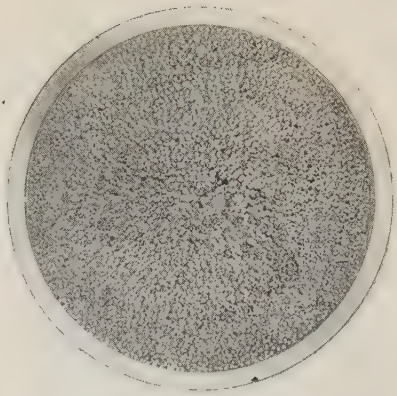

WE have an extended experience in the manufacture of Paper Insulated Telephone and Telegraph Cables, Telephone Cords, Switchboard Cables, etc., having supplied large quantities to the British and Foreign Post Offices, also to Telephone Companies both at Home and Abroad. Approximately 1,000 miles of Balanced Trunk Telephone Cables have been laid, jointed, and balanced by us for the British Post Office.

We are also manufacturers of Static Condensers for Telephone and Telegraph Circuits.

BRITISH INSULATED CABLES

LIMITED

Cablemakers and Electrical Engineers

PRESCOT, Lancs, ENGLAND

Cable paper core (*contd.*)
carbonic acid gas, use of, 1050
dry air, use of, 1048
earthing of, 1020
electrolytic damage, 1029
faults, 1057
inductive disturbance, 1036
—— interference, 933
insulation, 1024
jointing, 1042, 1044
joints, boiling out, 1047
——, multiple, 1054
lay of, 1025
lengths of, 1039
lubrication, 1034
multiple twin, 1026
number of wires, 1023
plugs distribution, 1052
protected, 1002
pulling in, 1040
quadruple twin, 1028
screened conductor, 1028
sheathing, 1025
star quad, 1027
termination of, 1053
testing, 971
—— during construction, 1050
—— joints, 1048
wiped joint, 1047
worming pairs, 1029
Cadence, 520
Calcium chloride, 1048
Calorie, 21
Capacity—
and inductance, 159, 209
and temperature, 74
effects of, 265, 286, 418, 574, 1122
graphic diagram, 287
of cables, 1024
of condensers, 179
of open lines, 1124
quantity and potential, 187
units, 187
specific inductive, 178
Cathode, 19
Cells—
ideal, 36
standard, 34, 111
testing of, 171
uses, 40
Central battery system, 345
—— —— duplex, 348
—— —— Wheatstone, 355
Chemical equivalent, 20
Chimney brackets, 1068, 1116
Circle area diameter, etc., 1159
Circuit—
definition of, 15
earth return, 212
Circuit (*contd.*)
magnetic, 78
metallic, 777, 800, 847, 883, 987, 1124
silencer, 840
Clark cell, 34
Closed circuit working, 223, 670
Cobalt steel, 95
Codes, 526, 614, 636, 674
Coercivity, 78
Coils—
battery, 322
condenser, 101
duplex, 466
leak, 816
resistance, 98
—— metal cased, 784
retardation, 100
Spagnoletti, 121
sparking, 322
testing, 174
Varley, 119
Combined res., 53
Combiner, Baudot, 538
Siemens, 457
Communicator A.B.C., 484
Commutator, 211
—— single needle, 228
Compensating res., 141
Compensation circuit, 277 295
Composited circuits, 885
Compound, insulating, 1067
Compressor, 1048
Concentrator, 357
ancillary, 372
automatic, 375
C.B. working, 361
partial concentration, 377
switchboard, 360
—— working limits, 369
testing apparatus, 364
time signal, 364
transfer circuits, 371
working sets, C.B., 365
—— —— absorbing res., 367
—— —— and D.C., 366
—— —— home signals cut off, 367
—— —— keys 87B, 367, 369
—— —— universal cons., 366
Concrete, reinforced, 1018
Condenser coils, 101, 297
Condensers, 176
capacity of, 178
dielectric for, 181
dimensions, 177
discharge of, 186
duplex balance, 286
insulation of, 185

Chloride Batteries

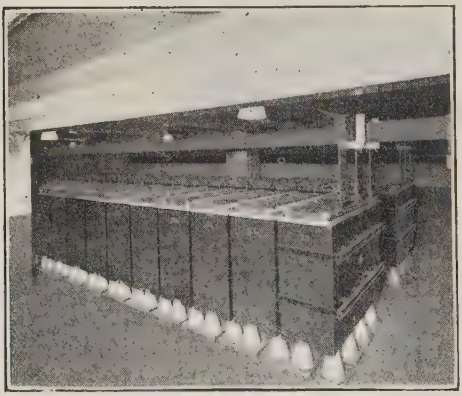

IN SERVICE AT THE HOLBORN TELEPHONE EXCHANGE

Silent working and absolutely steady voltage are the characteristic features of Chloride Batteries.

All important developments of modern storage battery practice are incorporated in Chloride Batteries, and the fact of their being used in the largest Automatic Telephone Exchanges in the country, is ample proof of their ability to withstand any calls made upon them.

The batteries in the Holborn and Tandem Telephone Exchanges each comprise 50 Chloride cells with the enormous capacity of 10,800 Ampere Hours.

Write for information to—

THE Chloride ELECTRICAL STORAGE COMPANY LIMITED

CLIFTON JUNCTION
Near MANCHESTER

137 VICTORIA ST.
LONDON, S.W.1

Condensers (*contd.*)
Mansbridge, 182
oscillatory discharge, 186
reading, 418, 471
signalling, 470
spark suppression, 260
specification for, 185
2 m.f., 183
7½ m.f., 184
Conductance, 54
Conductors and insulators, 14
—— and temperature, 72
Conductor resistance, 948
Conduits, 1002
Connecting link, 1041
CONNECTIONS—
NOTE
(*up, down, intermediate connections*, 220
universal connections, 326, 366, 818
A.B.C. leak working, 486
Ancillary concentrator, 374
Automatic concentrator, 378, 379
Baudot (see also Murray, Western Electric, and Morkrum).
automatic, 605
connection case auto., 603
—— —— quadruple, 599
distributor plates, 570
—— table appts., 585
divided circuit, 593
G relay, 586
keyboard, 530
phonic wheel and reed, 557
quadruple simplex, 595
receiver, 551
retransmitter, 591
tester, 613
two line simplex, 597
Bridge duplex, 474
—— —— G relay, 475
—— megger, 166
Central battery—
Hay duplex, 350
H.P.O. sets, 348, 364, 365
keys 87B, 368, 370
sounder omnibus circuit, 346
Vyle and Smart duplex, 353, 355
Wheatstone, 356
Coils testing No. 1, 175
Composited circuits, 885
—— —— for voice frequency, 887
Concentrator, 204
ancillary, 374
automatic, 378, 379
transfer circuits, 371
Creed quadruplex, 185
Connections (*contd.*)
teleprinters. See Teleprinter.
Wheatstone, 442
Detector No. 2, 116
—— No. 4, 118
Diplex, 330
—— Wheatstone, 331
Direct sounder, 221
—— —— duplex, 303
—— writer, 224
Double current key, 269
—— —— sounder, 271
—— —— —— direct, 272, 303
—— —— —— duplex, 301
Double plate sounder, 229
Filters, 854
G relay circuits, 245, 248
H relay circuit, 801
Hughes, 510
—— duplex, 515
Inker, combined, 224
Key, D.C., 269
6-terminal reversing, 322
S.C. with switch, 789
Localization tests, 961, 962, 964
Murray keyboard perforator, 615
—— reed and phonic wheel, 557
Murray test, 978
Phonic wheel and reed, 557
Pomeroy earth test, 979, 980
Quadruplex—
A side relayed duplex, 340
—— —— simplex, 343
B side, 319
Creed, 334
Forked, 342
split repeater, 338
up station, 323
Wheatstone, 331
Repeater—
alarm No. 3, 842
bridge duplex, 828
—— or differential, 829
duplex differential, 814
—— universal cons., 820
forked, 834
—— auxiliary auto switch, 835
Hughes, 836
Leak circuit, 819, 824
quadruplex, 839
simplex, 811
Secondary Cell Working—
Central battery working, 346
Double current sounder, 790, 791
—— —— duplex, 793,
8-voltage tablet, 777
electromagnetic cut-out, 781

ACCURATE — INSTANTANEOUS

The CREED TELEPRINTER

Combined Telegraph Transmitter Printer operates at 66 words per minute.

Change from Simplex to Duplex easily effected.

The Printer Relay operates at 25 milliamps.

Simple construction, easy maintenance.

Send your inquiries to

CREED & Co. Ltd.

Telegraph Engineers

CROYDON - SURREY

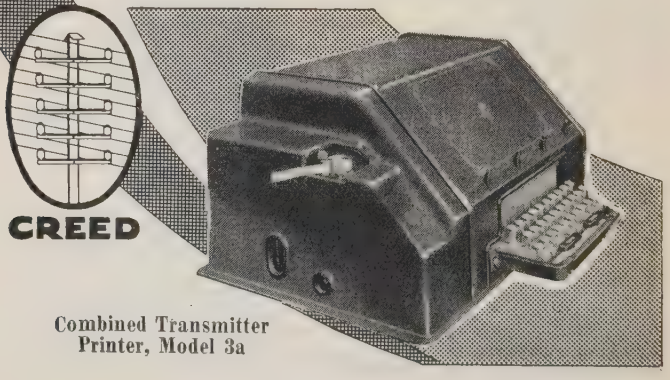

Combined Transmitter Printer, Model 3a

Connections, Secondary Cell Working (*contd.*)—
H relay circuit, 801
main charging switches, 770
—— sets rotary switch, 768
quadruplex, 803
— Wheatstone, 804
Siemens-Halsko voice frequency, 861
single current sounder, 786, 787
—— —— — duplex, 788
test box speaker, 805
24 v. battery switches, 767
Wheatstone bridge, 156
quadruplex, 804
simplex, 796
special circuits, 797
—— —— duplex, 799
transmitter, 795
Siemens combiner and relays, 458
keyboard perforator, 454
printer, 460
synchronizing, 461
transmitter, 455
Simultaneous telegraphy and telephony, 553
Single needle, 115
Sounder direct, 221
double current, 271
—— — direct, 272
—— —— duplex, 301
—— —— —— direct, 303
—— —— — comp. circuit, 298
quadruplex. See Quadruplex.
single current, 264
—— —— duplex, 283
Standard universal cons., 326, 366, 818
Sub-audio circuit, 895
Superposing, bridging coils, 899
repeating coils, 888, 889
Wheatstone on trunk, 891
— loop and key circuit, 892
3 loops and 1 earthed circuit, 893
Switches. See *Switches*, general index.
Switch spring test board, 904
Teleprinter 2A—
Double current duplex, 732
simplex, 730
—— with control line, 731
Teleprinter 3A, 666
double current simplex, 667
—— —— duplex, 668
governor, 663
internal connections, local circuit E.L. supply, 669
2-line simplex, 671
Connections, Teleprinter 3A (*contd.*)
—— —— voice frequency, 672
Teleprinter 4A and 5A, 693
Test board, 900, 907
tablet 7 hole, 966
—— 22 hole, 967
Thermionic valve, 850, 852
Tramway power supply, 1029
return feeder, 1031
tester No. 36, 1033
Universal connections, 326, 366, 818
—— battery connections. See Secondary Cell Working above.
Van Rysselberghe, 884
Varley test, 975
Vibrator and reed, 557
Voice frequency
General Electric Co., 869
P.O. single channel, 878, 880
Selt, 872
Siemens Halske, 861
Wald, 875
Western Electric, 865
Western Electric multiplex 625
Wheatstone A.B.C.
bridge, 794
—— duplex, 796
Wheatstone-Creed. See Creed.
Wheatstone duplex, 433
leak working, 431
receiver, 417
simplex, 429
special circuits, 420
transmitter, 427
Constantan, 102
Construction, aerial lines, 1060
underground, 994
Contacts, alloy for, 219
tests for, 962, 978
Controlling, magnet, 111
Copper, standard for, 67
Cordeaux insulator, 1065
Cords, 359
Correction—
Baudot, 575
Hughes, 507
Western Electric, 622, 624
Coulomb, 187
Couplings, cast-iron, 1012
Creed auto-repeater, 844
column printer, 452
keyboard perforator, 395
—— transmitter and printer, 673
mechanical relay, 648
multiplex printer, 620

SUPPLIED TO H.M.

Post Office.

D·P

BATTERIES

FOR INSTALLATIONS LARGE AND SMALL

THE D.P. BATTERY CO., LTD.

BAKEWELL DERBYSHIRE

London Office: 11 VICTORIA STREET, S.W.1

S.D. 160

Creed auto-repeater (*contd.*)
printer (Morse), 443
receiving perforator 431, 434
relay, 250, 647
start—stop, 634
teleprinter 3A, 634
—— 4A, 5A, 673
transmitter (Morse), 412
Creosoting, Rüping process, 1061
Cross-connection, 907, 938
Crosses, 981
Cruickshank, W., 416, 847, 857, 876
Current, absolute determination, 110
—— units, 4
deflection of compass, 9, 13
direction of, 13
division in circuits in parallel, 57
heating effect, 21
Cut-out, electromagnetic, 780

Damping, 114, 129
Daniell standard cell, 111, 112
D'Arsonval instruments, 112, 116, 117, 126, 133
Dead-beat galvanometer, 114, 130
Deafeners, 1117
Decay of timber, 1060
Decrement of quadruplex, 327
Deflection of compass, 13
Demagnetization, 77
Depolarizer, 25
Derricking poles, 1095
Desiccator, 1048
Detector No. 2, 116
No. 4, 117
Dielectric, 176
Difference of potential, 2
Differential duplex. See Duplex.
galvanometer. See Galv.
winding, 123
Dip, 1101
Diplex, 329
Direct sounder S.C., 221
battery power, 222
writer, See Inker
Disconnection localizing, 962
Distribution frame, 937
plugs, 1052
Distributor—
Baudot, 555
direct, 562
Murray, 612
Siemens, 457
Division of current in circuits in parallel, 57

Double current sounder, 263
current required, 273
direct, 273
duplex, 282
—— capacity balance, 286, 289
—— direct, 302
—— resistance balance, 281
Double current system, 263
—— plate sounder, 229
Double split, 279
sulphation theory, 738
winding resistance coils, 105
Down station, 220
Draw-vice, 1099
Drop indicator, 839
Drum barrow, 1098
Dry-air plant, 1048
batteries, 32
core cable. See Cable.
joints, 960
rot, 1060
Duct routes, 1008
Ducts, earthenware, 1003
multiple-way, 1004
self-aligning, 1003
Dummy fuses, 931, 945
Duplex A.T.M. unit, 306
balance, 281, 286, 289, 306
bridge, 463
compensation circuit, 277, 295
combination method, 278
differential, 274
difficulty with short lines, 304
opposition method, 275
resistance coils, 466
Dynamic induction, 1037
Dyne, 3

Earth as return, 212
clip, 214
connection, 213
currents, 986
——, elimination in testing, 953
—— remedies, 987
faults, localization of, 960
plate, 212
test for position, 975
wiring, 1076
Earth's magnetic field, 5, 14
E.C.C. dry cell, 34
Eddy currents, 87
Elasticity, 1104
Electrification, 972
Electrode, 19
Electrolysis, laws of, 20
Electrolyte, 20
Electrolytic damage, 1029
Electromagnet, 75
figure of merit, etc., 70

G.E.C.

TELEPHONE WORKS

Manufacturers of

TELEPHONE APPARATUS

for all purposes

Apparatus for Voice Frequency and Composited Telegraphy

Repeater Equipments for Long Distance Lines

Automatic Telephone Exchanges Instruments, etc.

THE GENERAL ELECTRIC CO., LTD.

TELEPHONE WORKS

Head Office: MAGNET HOUSE, KINGSWAY, LONDON, W.C.2

Telephone Works: STOKE, COVENTRY

Electromagnet (*contd.*)
Hughes, 497
iron for, 91
winding of, 88
Electromagnetic—
cut-out 780
induction, 1037
leak, 516, 836
switch, 810
Electromotive force, 15
induction of, 190
Electrostatic capacity. See Capacity.
induction. See Induction
lines of force, 177
Elements and poles, 19
positive and negative, 19
Engaged lamp, 372
Equalizing resistance for intermediate working, 367
Erg, 4
Eureka, 102
Evershed, S., 7
Ewing, 6
Examination syllabuses, 1165
Excitant, 25
Extension arms, 1110

Factor of safety, circuits, 1139
open lines, 1078
wires, 1104
False zero tests, 953
Farad, 187
Faraday, 20
Fast speed repeater. See Repeater
Faults, apparatus, 989
causes of, 967
effects of, 946
localization of, 960
Murray test, 977
types, 960
underground, 1057
Varley test, 975
Faulty circuits, making good, 981
Faure, 736
Feed res., 347
Figure of Merit, 90, 136
and resistance, 90
of different galvo, (1A), 124
of direct writer, 224
of galvanometers, 137
of local inker, 224, 225
of relaying sounders, 231
of relays, 233, 238, 252, 257, 259
of S.C. galvo (22A), 122
of sounders, 215, 217
Filters, 853
Finials for poles, 1062
Fire precautions against, 943
Fleming rule, 190
Fluids, depolarizing and exciting, 25
Flux, 79
Force, between charges, 4
definition of, 3
—— magnetic poles, 9
Forces, parallelogram of, 1102
triangle of, 1107
Forked repeater, 832
Forking wires, 902
Fraser, J., 306
Fuse, dummy, 931, 945
glass tube, 924
heat coil and protector, 928
insulator, 931

Galvanometer, 105
absolute, 110
astatic, 133
Ayrton Mather, 135
ballistic, 135
constant, of, 111, 145
controlling magnet, 111
Crompton, 135
damping of, 114, 129
D'Arsonval, 133
dead beat, 114, 130
Detector No. 2, 116
—— No. 4, 117
differential (1A), 124
—— winding, 123
figure of merit, 125, 136
Gaugain or Helmholtz, 107
high resistance, 136
horizontal, 115
induced needles, 119
Kelvin (or moving magnet), 131
lamp and scale, 130
moving coil, 126
Paul's unipivot, 112
reflecting, 127
sensitiveness, and sensitivity, 137
shunts, 138
single coil (22A), 122
Sullivan, 133
tangent, 106, 110
winding of, 136
Game guards, 1115
Gauging disc., 1006
Gauss, 9
G.E. Co. voice frequency, 866
Generator—
A.C. 197
D.C., 211
magnetic circuit, 198
German silver. See Nickel Silver
Gilbert, 78
Gladstone and Tribe, 738

EVERYTHING The G.E.C. your guarantee ELECTRICAL

G.P.O. No. 4 DETECTOR

(PATENT No. 304448)

LATEST PATTERN

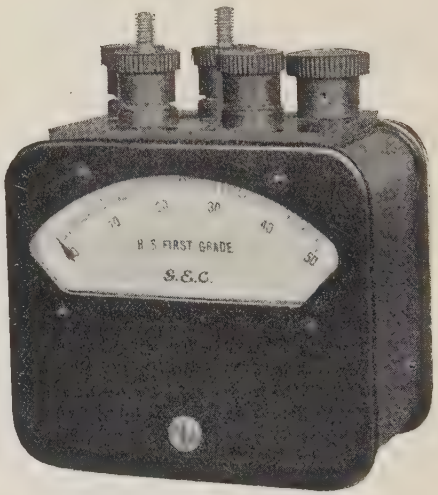

SELF-CONTAINED RANGES

0-100 milli-volts	0-10 milli-amps
0-5 volts	0-50 milli-amps
0-50 volts	0-500 milli-amps

Fitted with spike for cell-testing purposes

External shunts and resistances can be supplied extending ranges up to 500 volts and up to 1,000 amps.

Accuracy—1st Grade B.S.S.

Made at THE SALFORD ELECTRICAL INSTRUMENT WORKS of

THE GENERAL ELECTRIC CO., LTD.

Head Office : Magnet House, Kingsway, London, W.C.2

More than 90% of No. 2 Detectors and over 60% of No. 4 Detectors used by the G.P.O. have been made in these works.

Gloves, india-rubber, 923
Gold-silver alloy, 219
Gott, 189
Graduator, 900
Grid, 923, 937
Grunnenwald, 554
Guard cradle, 923
  wire (Price's), 165
  wires, 919
Gulstad relay, 240

H RELAY circuit, 800
H-armature, 198
Harrison, H. H., 238, 306, 333, 336, 375, 453
Hay, C. E., 348, 954
  duplex, 348
Heat coil, 925
—— —— fittings, 928
Hellesen dry cell, 34
Helmholtz equation, 419
Henry, 195
Horse power and watts, 17
Hughes' system, 494
  adjustment and operation, 511
  chariot, 502
  duplex, 513, 516
  electromagnet, 497
  governor, 498
  inversion, 505
  letter to figure change over, 505
  paper movement, 508
  printing, 506
  rejector, 502
  retardation effects of, 512
  speed of working, 494, 508
  switch, 511
  synchronization, 507
  zero adjusting lever, 508
Humming of wires, 1117
Hydrometer, 748
——, Lucsmart, 749
Hysteresis, 86

IMPEDANCE, 205
——, use of, 210
Indicator A.B.C., 481
  drop, 839
  key, 363
Induced E.M.F., 191
Inductance, 195
  and speed of working, 516, 1124, 1129
  and time constant, 448
  balanced, 419
  in leak, 516
  of relays, 195
  of sounders, 217
  series and parallel, 262
Inductance (*contd.*)
  spiral, 918, 1057
  unit of, 195
Induction coil, 193
  dynamic, 1037
  electrostatic, 1036
  parallel circuits, 837, 1038
Inductive capacity. See Capacity
  disturbances, 1036
  interference between submarine cable cores, 837
  leaks, 516
Infra acoustic. See Sub-audio
Inker, direct, 223
  local, 224
  polarized, 225
Insulating compound, 1067
Insulation resistance—
  and speed of working, 1124
  apparent and true, 948
  cables, testing of, 958, 973
  definition of, 948
  effects of loss of, 946, 1139
  extended circuits, 951
  mileage value, 949
  periodical tests, 955
  working and maintenance standards, 951
Insulators—
  and conductors, 14
  —— ——, effect of pressure, 73
  —— ——, temperature effect, 72
  cordeaux, 1065
  design, 1064
  D.S.W., 1065
  fuse, 931
  J bolts for, 1067
  leading in, 1068
  pothead, 1067
  secondary cell, 744
  side knob, 1070
  spindles, 1065
  terminal, 1066
Intensity of magnetization, 9
Intercommunication system, 381
Interference by power circuits, 933
  inductive, 1036
Intermediate returns, 796, 909
—— stations, 221
Intermittent faults, 964
International symbols, 1157
Interruption cable, 1111
Ions, 20
Iron and steel, qualities, 91
  non-magnetic, 94
Iron resistivity, 67, 70

JACK, 358
—— lamp and relay, 359

GLOVERS

DRY CORE TELEPHONE CABLES

OF ALL TYPES

"SPIRAL-FOUR" CABLE

(containing specially screened quads for Broadcasting)

W. T. GLOVER & CO., LTD.

TRAFFORD PARK, MANCHESTER

Jarrah wood, 1062
J-bolts, 1067
Joint box, 1014
  capacity, 179
  markers, 1011
  resistance, 53
  testing, 1048
Jointing. See Wire and Cable
—— sleeves, 1074
Jumper wires, 907, 938

Karri wood, 1062
Kathode, 19
Kelvin, 131, 1122
Keyboard, Baudot, 526
—— perforators. See Perforators
Keys—
  controls for, 219
  double current, 268
  for forked repeaters, 835
  indicator key, 363
  Rymer-Jones, 161
  single current, 219
  single current with switch, 788
  six-terminal reversing, 321
Keystone link, 1041
Kirchhoff's laws, 57
Kleinschmidt perforator, 390
KR, 807, 1122

La Cour phonic wheel, 556
Ladder fittings, 1094
Laidlaw, J. B., 376
Lamp indicator, 359
Lamp res., 784, 823
Lay, in cables, 1024
Lead cable. See Cable
Lead—
  peroxide, 735
  sulphate, 735
Leading-in methods, 944, 1068
Leak circuit, 816, 823
—— electro-magnetic, 516
—— working, 430, 486
Lea Rage currents, 1030
Leclanché cell, 26
  capacity in ampere-hours, 39
  chemistry, 30, 31
  E.M.F. of, 40, 41
  internal res., 39, 40
  powdered manganese, 27, 37
  sizes of, 38, 40
  standards of, 39
  testing of, 38
  use of, 40
  zincs, 28
Lenz's law, 192
Lifting jacks, 1040
Lightning, 910
Lightning Protectors, 910
  C, 915
  D, 912, 913
  earth for, 695
  F, 917
  G and H, 915
  heat coil and fuses, 928
  serrated edges, 1055
  tablet, 915
  use of inductance, 918, 1057
Line—
  construction. See Aerial and underground. See Faults
  stays, 1113
  wire. See Wire
Lines of force, 7
— ——, electrostatic, 177
——, periodical tests, 955
Links—
  U-, 904
  wire, 1055
Local action, 25
Localization tests, 960
Locating apparatus faults, 989
Lodestone, 4
London Metropolitan switching system, 381
Longitudinal stays, 1113
Loop batteries, 777
Looping of wires, 902, 987
—— strip, 910
Loop test, Murray's, 977
—— ——, Varley's, 975
Lucas, J. G., 27, 28
Lucsmart hydrometer, 749

Magnet, permanent, 94
—— pull of, 88
Magnetic circuit, law of, 78
—— of electromagnet, 76
—— of generator, 198
  field, unit, 9
  induction, 8
  materials, 5, 91, 92
  meridian, 14
  pole unit, 9
Magnetism, 4
  earth's, 5
  molecular theory, 6
Magnetization, curves, 80
Magnetizing force, 83
Magneto-motive force, 82
Magnets, ageing of, 94
Main distribution frame, 937
Methods of magnetization, 95
Making good faulty circuits, 981
—— up special circuits, 984
Mandrels, 1005, 1110

MUIRHEAD & CO., LTD.

Relays

Vibrating Forks

Phonic Motors

Automatic Transmitters etc.

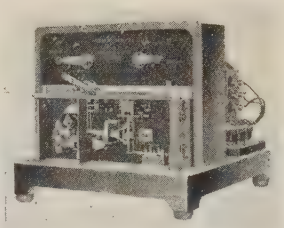

Condensers of all Types

Inductances

Resistances

Galvanometers etc.

AUTOMATIC CABLE TRANSMITTER

CABLE AND LANDLINE APPARATUS

A.C. and D.C.
TESTING & MEASURING INSTRUMENTS
FOR THE
WORKSHOP and LABORATORY

PRECISION WORK TO ORDER

CATALOGUE SUPPLIED ON REQUEST

ELMERS END, KENT, ENGLAND

Telegrams
MUIRHEADS, ELMERS-END

Telephone
BECKENHAM, 0041

Manganese chloride, 28
dioxide, 27
pebble, 27
powdered, 227
Manganin, 107
Manholes, 1017
Mansbridge, G F., 182
Mariner's compass, 5
Markers for joints, 1011
Marking current, 263
Martin, A. W., 318
Maxwell, 78
Measurement of Capacity, 188
Measurement of current—
absolute current, 110
alternating current, 204
ammeter, 127
detector, Nos. 2, 4, 116
galvanometer, 105, 108, 138
—— constant, 145
sheath current, 1033
Measurment of E.M.F., 146, 171
direct deflection, 146
potentiometer, 148
Rayleigh, 150
voltmeter, 146
Measurement of Internal Resistance—
Detector No. 2 or No. 4, 170
P.O., 173
secondary cells, 172
voltmeter shunt, 172
Wheatstone bridge, 172
Measurement of Resistance—
bridge megger, 162
conductor res., 952, 954
direct deflection, 170
earth res., 979, 980
effect of capacity inductance or E.M.F., 159
insulation res., 949
loop tests, 975
megger, 162
rough methods, 170
very low resistances, 169
voltmeter, 170
Wheatstone bridge, 157
Megger, 162
——, motor driven, 956
Megohm, 17
Mendonça governor, 562
Mercer, C. J., 345
Metallic circuit, 777
speed, 1124
working, 800, 987
Mho, 54
Microfarad, 188
Microhm, 17
Milliampere, 16
Milliamperemeter, 116
Mirror, galvo. See Galvanometer
Morkrum multiplex, 631
—— teletype. See Teleprinter 1A and 2A
Morse sounder. See Sounder
Motor desiccator, 1048
generator, 779
winch, 1041
Multiplex, 521. See also Baudot, Morkrum, Murray, Western Electric
Multiplier, 148
Multiplying power, 139, 144
Mumetal, 92
Murray, Donald, 555, 612, 614, 616, 618, 619, 840
—— loop test, 977
—— reed and phonic wheel, 555
Murray Multiplex, 612
distributor, 619
keyboard perforator, 614
receiving perforator, 618
transmitter, 616
Mutual induction, 194

Negative element, plate and pole, 19
News circuits, 430
Noise from open wires, 1117
No-mag iron, 94
Non-polarized relay, See Relays
N-pole of solenoid, 75
NUMERICAL EXAMPLES—
A.B.C. leak condenser, 487
Aerial line, factor of safety, 1060
Area and diameter of wires, 62
Arrival curve, 1133
Battery. See Cells
—— testing. See E.M.F. and internal resistance
Board of Trade unit, 18
Bridge duplex, currents, 475
—— ——, power, 479
—— ——, rheostat resistance, 478
Capacity, A.B.C. condenser, 487
—— of cable cores, 1154
——, quantity and potential, 187
C.B. sounder line conditions, 1147
Cells, best arrangement, 45
—— in multiple arc, 44
—— in parallel, 43
—— in series, 42
—— required, 49, 50, 51
——, P.D. closed circuit, 61
—— —— and internal resistance, 61
Cells, secondary, number, 49

Standard

Telephones and Cables Limited

Manufacturers of

Automatic Telephone Equipments

Manual Telephone Equipments

Telephone Apparatus

Telephone Sets and Associated Apparatus

Telephone Repeater Equipments

Carrier Current Telephone and Telegraph Equipments

Composite Telephone and Telegraph Equipments

Telephone Cords and Cordage

Electric Light and Power Cables

(Low, High, Extra and Super Tension Paper Insulated Cables)

Telephone Cables **Loading Coils**
Switchboard Cable

Radio Transmitting Apparatus

Commercial and Broadcasting Radio Equipments

Thermionic Valves, Rectifiers and Oscillograph Tubes

Public Address Systems, Amplifiers and Associated Apparatus

Gamewell Fire Alarm Systems

Remote Control Apparatus for Power Sub-Stations

Train and Traffic Control Apparatus

Send your inquiries to :

Standard Telephones and Cables Limited

COLUMBIA HOUSE, ALDWYCH, LONDON, W.C.2

Telephone : Holborn 8765 (20 lines).

Works : HENDON, NORTH WOOLWICH, NEW SOUTHGATE

Branches : GLASGOW, LEEDS, BIRMINGHAM, MANCHESTER, LIVERPOOL & DUBLIN

Numerical examples (*contd.*)
Cells special arrangement, 48, 51
——, testing. See E.M.F. and Internal Resistance
—— wrongly joined up, 168
Condensers, capacity and dimensions, 179
——, discharge, 840
——, series and parallel, 180
Conductivity percentage, 62
Conductor, resistance and temperature, 73
——, resistance tests, 953, 955
Current and resistance of relay, 72, 115
——, division of, 57, 58, 60
—— on tangent galvo, 89
Diameter and sectional area, 60
Double current duplex, currents, 281
Electromagnet coils in series and parallel, 90
figure of merit, 91
magnetic effects, 91
winding, 88
Fault, effect of, 846, 1147
Figure of merit, 91
Flux of solenoid, 84
Galvanometer constant, 111, 145
—— shunt. See Shunts
Hay duplex, currents, 349
Heat generated, 22
Impedance and reactance, 206
Induction of E.M.F., 192
Insulation resistance—
conductor resistance, 949
correction, 950
extended circuits, 951
per mile, 946, 969
thickness of insulation, 950
Joint resistance, 54, 55, 56
galvo and shunt, 141
multiple arc, 56
parallel, 54, 55, 56
KR of single wire and loop, 1125
Line, stress at angle, 1108
—— wire, stress, etc., 1103
Magnet, force exerted, 9, 10
Magnetizing force of solenoid, 83, 84, 85
Magneto-motive force, 83, 84, 85
Measurements. See Measurement in general index
Mho and ohm, 54
Murray loop test, 977
Ohm's law, 17
P.D. shunted battery, 61
Numerical examples (*contd.*)
Pole breaking stress, 1081
downward thrust, 1108
factor of safety, 1078
horizontal stress, 1107
Potential, quantity and capacity, 187
Power, 18
Quadruplex, currents, 310
Received current, 946, 1147
Relays figure of merit, 239
Reluctance, 81
Resistance of wires of varying lengths, areas, and diameters, 62
of wires of varying lengths and weights, 68
of wires of varying weights and diameters, 71
Resistances, paths in parallel, 54
paths in series, 53
temperature variation, 73
Resonance, 209
Restivity, comparison, 68
foot grain, 71
inch cube, 68
ohm mile, 70
Secondary cells, charging, 778, 779
Sent current, 947, 1142
Shunt, compensating resistance, 141
galvo constant, 112, 145
multiplying power, 140
resistance, 140, 142
universal, 144
Shunted condenser and inductance, 419, 421, 426
Single current duplex, 281
Specific resistance. See Resistivity
Speed of working, 856, 1134
Stays, stress on—
at terminal pole, 1107
due to angle, 1108
Tangent of an angle, 108
Time constant, 419
Universal battery system, 760
Varley loop test, 976
Vyle and Smart duplex, 352
Wheatstone bridge, 159
Wind pressure, 1079
Wire, resistance of. See Resistance
Wire, stress, dip and sag, 1103

Oersted, 78
Ohm and Ohm's law, 17
Ohmmeter, 162

Open and closed circuits, 223
Overhead telegraphs, circuit efficiency, 1139
fast speed formulae, 1146
leakage conductance theory, 1139
limiting mileages, 1145, 1147
use of hyperbolic functions, 1151

Paper for perforator, 385
—— for receivers, 414
Parallellogram of forces, 1109
Pegs. See Plugs
Percentage conductivity, 68
Perforators—
Booth-Willmot, 400, 602
Creed morse, 395
—— receiving, 434
Kleinschmidt, 390
Kotyra, 389
Murray, 614
—— receiving, 618
pneumatic, 389
Siemens, 454
Wheatstone, 384
—— adjustment of, 388
Permalloy, 92
Permanent magnet, 94
compound, 97
magnetization, 95
Permeability, 78
Peroxide of lead, 735
Petroleum jelly, 1041
Phonic wheel, 555
Pipes, Cast-Iron, 1005
bends, 1007
bonding, 1034
couplings, 1011
jointing, 1006
Smith's composition, 1005
steel, 1008
terminating, 1015
Plans, symbols on, 981
Planté, 736
Platinoid, 102
Platinum silver, 102
Plugs and cords, 358
—— distribution, 1052
Plus circuit, 892
Pneumatic perforator, 389
Polarization, 24
Polarized relays. See Relays
—— sounders, 215
Pole cart, 1094
fittings, spacing, 1063
holes, 1082
lifters, 1095
numbering, 1114
Pole cart (*contd.*)
roofs, 1062
steps, 1093
test box, 1055
Poles—
A-poles, 1091
arming of, 1062, 1113
breaking stress, 1079
carrying capacity, 1081
creosoted, 1060
depth buried, 1082
dimensions of, 1078
distances apart, 1081
erection of, 1094
factor of safety on, 1078, 1081
height, 1078
H-poles, 1092
in marshy ground, 1082
in rock, 1082
lagging, 1083
life of, 1061
light, medium and stout, 1081
number per mile, 793
painting, 1062
preservative processes, 1060
right angle turns, 1113
Rüping process, 1061
strength of, 1081
timber for, 1060
wind pressure on, 1079
Pomeroy's earth test, 979
Porous pot, 26
Positive pole, plate and element, 19
Potential, 2, 4
due to charge, 4
quantity and capacity, 187
unit of, 4
Potentiometer, 148
Pothead insulators, 1067
Power Circuits, 918
grid, 923, 937
interference, 933
pressures used, 921
protection from, 918
Power unit, 18
Price's guard wire, 165
Primary cells. See Batteries
Printer. See Inker
Printing telegraphs, 434, 453, 487, 494, 517, 612, 620, 622, 627, 632
Prolongation, 265
Protection. See Lightning, Power, and Fire
Protectors, H.C. and fuse, 928
lightning, 910
Purves, Col. Sir T. F., 363, 381, 762, 1067

Quadruplex, 308
A & B keys, 320
adjustment, 326
American, 331
Argentine B side, 332
A side relayed duplex, 339
—— —— C.B., 342
balancing, 326
battery coils, 322
B kick, 314
B side, 318
Creed, 333
currents required, 328
decrement, 327
earthing switch, 322
effect of key short circuits and disconnections, 330
extended circuits, 337
forked, 341
Harrison morse multiplex, 336
incrementing voltages, 338
intermediate pos. of keys, 324
other systems, 342
short lines, 328
sparking coils, 322
split repeater, 337
universal cons., 326
Wheatstone, 329
Quantity of electricity, unit, 4
—— potential and capacity, 187

Raw hide suspenders, 1119
Reading condenser. See Shunted Condenser
Receiver, 413, 457, 487, 494, 532, 620, 627, 632
Receiving perforator, 434, 618
Recording ammeter, 126
Reed, 557, 622, 631
Relays, 230
auto, 612
coils in series or parallel, 195, 238, 262
Creed, 250
definition of, 230
design, 260
differential test, 238
figure of merit, 231, 233, 238, 252, 256, 257, 259
flexible contacts, 249
G, 240
adjustment, 245
modified vibrating circuit, 247
Gulstad, 240
H, 248
inductance of, 195
Johnson & Rahbek, 262
line relay, 357
Relays (*contd.*)
magnetic adhesion, 263
—— circuit of, 238
non-polarized, 230, 233
—— C, 231
pilot, 361
polarized and non-polarized, 230
P.O. standard, 234
—— —— adjustment, 237
—— —— neutral, 237
power relay, 441, 647
mechanical, 648
rectangular base, 240, 822
res. and figure of merit, 238
Siemens Halske, 257
spark suppression, 259
test for differentiality, 238
transmitting, 813, 247
type 209 FA, 252
—— 215, 256
used in telephony, 233
winding of, 89, 252, 262
Relaying sounder, 230
Reluctance, 79
Remanence, 77
Repeaters, 807
adjustment, 824
anti-induction device, 837
alarm No. 3, 840
auto-switch, 810
—— —— auxiliary, 835
Baudot, 831
Bridge duplex, 828
—— or differential, 830
central battery, 48
duplex, 814
—— switch, 815
Creed auto-repeater, 844
electromagnetic switch, 810
faults and causes, 825
forked, 832
Hughes, 835
—— silencer, 842
indicators in battery leads, 839
leak circuit, 816, 823
permanently duplex, 831
quadruplex, 838
—— A side relayed C.B., 342
—— —— —— duplex, 339
—— forked, 341
—— split, 337
regenerative, 844
relays with rect. bases, 822
res. lamps, 823
simplex, 807, 811
—— and diffl. both sides, 820
standard universal cons., 818
Repeating coils, 888
Residual magnetism, 77

Resistance, 15
coils, 98
——, heating effects, 784
——, metal cased, 784
——, type of wire, 101
——, winding of, 105
lamp, 784, 823
measurement. See Measurement
of batteries, 40
protective, 783
specific. See Resistivity
temperature, variation of, 72, 101
unit, 15
vacuum, 784
Resistances in series and parallel 53
Resistivity, 67, 101
cubic, 71
foot grain, 71
ohm-mile, 70, 985, 1024, 1071
Resonant shunts, 935
Resultant fault, 946
force, 1109
point, 1086
Retardation, 265, 574, 512
coils, 99
Retentivity, 94
Rheostats, 103
Ring bolts, 1019
Roof standards, 1120

Saddle stay, 1093
—— wire, 1093
Safety belt, 1100
Sag of wires, 1101
Salamoniac, 28
Secondary cell working. See Universal Battery System
Secondary Cells, 734
battery room, 756
buckling, 740, 746, 748
cadmium testing, 755
capacity, 751, 743
charging, 752
chemistry of, 736
chloride types, 741
connections between cells, 757
counter E.M.F., 752
D.P. type, 745
efficiency, 750
electrolyte, 748
E.M.F., 750
first charge, 752
half-negatives, 746
insulators for, 744
internal res. and temperature, 751
lead antimony grids, 741
negatives, 742, 744
Secondary cells (*contd.*)
number of plates, 744
oil layer, 747
packing pieces, 747
pole and plate positives, 739, 744
separators, 746
size of cell, 743, 751
specific gravity, 743, 749, 752
spray plates, 746
treatment of, 752
Self-inductance. See Inductance
Self-induction, 194
Selt voice frequency, 871
Sending circuit, resistance, 426, 1122
Sensitivity, 137
Shunted condenser, 419, 423
adjustment, 425
on short circuit, 426
Shunts—
ammeter, 126
coils on galvo, 253, 355
compensating resistance, 141
galvanometer, 138
joint resistance, 141
multiplying power, 139, 144
spark suppression, 259
to reduce inductance, 124
universal, 143
Side-flashing, 918
Siemens combiner, 457
dry cell, 33
-Halske automatic system, 453
voice frequency, 857
keyboard perforator, 453
receiver, 457
synchronization, 461
transmitter, 455
Signalling condenser, 470
speed of. See Speed of Working
Signal, shape of, 1125
Silencer, alarm repeater No. 3, 840
Hughes, 842
sounder, 840
Silencers—
for aerial wires, 1117
for brackets, 1118
Silent interval, 1123
Simultaneous telegraphy and telephony, 883
Sine wave, 201
Single channel voice frequency, 877
Single current sounder, 263
duplex, 282
Single needle, 228
Slip for perforator, 385
—— for receiver, 414
Smart, E. V., 350
Smith's composition, 1005

Solenoid, 75
magnetizing force of, 83
N. pole of, 75
Sounder, 214
figure of merit, 215
polarized, 215
—— theory of, 218
relaying, 230
silencer, 840
Vyle polarized, 215
Sounder circuits. See Direct, Single Current, Double Current Sounder, and Quadruplex
Sourdines, 1117
Spacing current, 263
Spagnoletti's coils, 121
Span, length of, 1081
and stress, 1101
Spark coils, 322
Sparking at relay contacts, 247, 259
—— of transmitter, 426
Special Circuits—
apparatus for, 795
formation of, 984
power required, 985
resistance of, 985
Specific gravity, 562, 572, 575, 576
inductive capacity, 178
resistance. See Resistivity
Speed of Working, 494, 1122
and battery resistance, 1122
Baudot, 1136
calculated speeds, 1130
duplex speed, 1125
effect of insulation, 1124
—— of inductance, 1129
formulae for received current, 1131
G relay, 1135
encroachment of margin, 1126
Hughes, 494
length of circuit, 1120
metallic circuits, 1124
Signal shape, 1125
theoretical speed, 1125
voice frequency, 856
weak current telegraphy, 1137
Stalloy, 79
Standard cells, 34, 111
—— wire gauge, 1164
Standards, roof, 1120
Start-stop telegraphs, 632
Static capacity. See Capacity
—— electricity, 1
Stations up, down, and intermediate 220
—— universal, 326, 366, 818
Stay, 1083
attachment, 1086
Stay, *(contd.)*
blocks, 1085
Buller type, 1087
crutch, 1089
factor of safety, 1107
guards, 1086
hole, 1085
insulated, 1090
lateral, 1083, 1115
longitudinal or line, 1113
over-road, 841
parallel, 1087
pole, 1114
power circuit crossing, 1090
proximity to wire, 1089
resultant, 1086
rods, 1084, 1089
splicing, 1088
spread of, 1084
stresses on, 1107
V-stays, 1087
wire, 1083
Steel for magnets, 95
Steljes Recorder, 487
Storage battery. See Secondary cells
Stray currents, 1030
Struts, 1090
Sub-audio, 893
Superposing, 883
composited cot, 885
rural telephones, 889
telegraph on telegraph loop, 892
telegraph on trunk, 891
sub-audio, 893
Van Rysselberghe, 883
with bridging coils, 890
—— repeating coils, 888
Surveying aerial lines, 1112
—— underground lines, 997
Suspenders, aerial cable, 1119
Sweeps rods, 1040
Switch—
auto, 810
4-bar, 516
6-bar, 516
8-bar, 815, 822
24-point, 823
6-terminal, 2-position, 300
9-terminal, 2-position, 324
electro-magnetic, 810
Hughes, 447
peg, 796, 816
reversing Wheatstone Bridge, 156
spare set reversing, 796
Switching systems, 381
Switch spring. See Jack
Syllabuses of examinations, 1165
Symbols, international, 1157

Symbols on plans, 981
Synchronism, 524
  Baudot, 575
  Hughes, 507
  start-stop, 633
  teleprinters, 633
  Western Electric, 622, 624

TABLES—
  annual charges and interest, 997
  battery power required, 985
  Baudot, speed, 1136
  —— manipulation, 526
  B, H, & μ, 81
  cable P.C., 1023, 1024
  C.B. sounder, working limits, 369
  cells, ampere-hour capacity, 39
  ——, E.M.F. (volts), and use of, 32
  ——, powdered *v.* pebble MnO_2, 174
  D.C.S. cells required, 222
  —— direct cells required, 273
  duplex balance, 305
  exponential and hyperbolic functions, 1161
  fault at centre of circuit, 1142, 1143
  galvanometers, figures of merit, 137
  ——, 90ω, shunted, 139
  G relay circuit, 247
  Hughes switch, 511
  interest, 997
  joint boxes, 1014
  Leclanché cells, details of, 40
  lines, kinetic stress on, 1079
  —— static stress on, 1079
  —— storm conditions, 1080
  line wire, 1071
  manholes, 1019, 1022
  Murray code, 614
  overhead lines, use of hyp., functions, 1153
  —— ——, length and loss, 1154
  polarized sounders, 217
  poles, dimensions, 1080
  ——, carrying capacity, 1081
  power circuits, pressures, 921
  quadruplex conditions, 315
  received C. and leakage, 1142, 1143
  relays, 215, 257
  resistance alloys, 102
  —— coils, heating of, 784
  —— of wires, 70
  resistivities, 67

Tables (*contd.*)
  secondary cell working—
    drum switch, 593, 594
    main sets positions, 765, 769
    24^{V} sets, 591
    size of cells, 782
  specific inductive capacity, 178
  speed of working, 828, 633
  standard wire gauge, 1164
  stay blocks, 1085
  —— rods, 1084
  —— wire, splicing, 1088
  symbols, international, 1157
  —— on plans, 981
  teleprinter code 1A, 670
  —— —— 3A, 636
  —— —— 5A, 674
  temperature variation of resistance, 79
  test box changes, 680
  useful numbers, 1159
  Wheatstone & Baudot speeds, 1136
  —— bridge, use of, 157
  wire, 1071
  —— elasticity, 1105
  —— expansion, 1105
  ——, factor of safety, 1104
  —— stay, splicing, 1088
Tangent of an angle, 108
—— scale, 108
Tape, 670
Telegraph switching systems, 381
Teleprinter 3A, 634
  adjustments, 663
  code, 636
  governor, 662
  inversion, 652
  keyboard locking, 645
  local circuit direct C. supply, 669
  printer unit, 647
    —— combination combs, 650
    —— mechanical relay, 648
  send-receiver switch, 645
  transmitter unit, 637
  two line simplex, 670
  —— —— ——, V.F., 672
  typehead, 653, 655
Teleprinter 5A and 4A—
  adjustment, 693
  carriage return, 690
  code, 674
  column feed, 688
  governor, 684, 692
  keyboard locking, 679
  letter counter, 681
  motor starter, 690
  paper carriage, 686
  Printer unit, 684

Teleprinter 5A and 4A (*contd.*)
send-receive switch, 679
transmitter unit, 674
Teleprinter 1A, 694
governor, 712
inversion, 709
keyboard clutch, 700
extractor, 696
locking loop, 699
printing, 702
start-stop contacts, 699
Teleprinter 2A, 712
adjustments, 733
bell mechanism, 725
governor, 729
inversion, 726
printer, 716
selection, 717
spacing cut-out, 724
Teletype (type bar). See Teleprinter 2A
—— (typewheel) See Teleprinter 1A
Temperature and resistance, 73
Tension ratchet, 1099
Test and cross-connection frames, 937
Test Board, Switch Spring Type, 904
changes, 908
cross-connection, 898, 907
grouping springs, 909
intermediate returns, 909
looping strip, 910
principle, 906
special circuits, 909
transfer circuits, 909
Test board, U-link types, 903
Test Box, 898
arrangement of, 898
battery panel, 900
manipulation, 902
pole test box, 1055
small office type, 901
Test cable, 1040
Testing of batteries. See Measurements
—— line, 945, 955
Thermionic valve, 849
—— —— for A.C., 852
Thomson. See Kelvin
Tie rod, 1091
Timber, 1060
Time constant, 448
Tinfoil paper, 18
T-iron, 1009
Tramway guard wires, 919
Transfer circuits, 371, 909
Transformer, 193
Transmitter. See Wheatstone, Western Electric, etc.
Transmitting relay, 812
Transom, 1092
Triangle of forces, 1102
Tribe, 738
Trolley wires, 1030
Truss rods and rings, 1092
Typeprinting telegraphs, 434, 453, 487, 691, 517, 612, 620, 622, 627, 632

Underground Routes, 994
cable. See Cable Paper core
conduits, 1002
connection to open routes, 1052
construction, 1040
design and lay-out, 995
faults, 1057
jointing chambers, 1014
pulling in cables, 1040
selection of route, 997
termination of, 1053
thrust-boring, 1000
testing during construction, 1048, 1050
unison, 524
Unit, Board of Trade, 18
capacity, 4, 187
current, 15
E.M.F., 15
flux, 79
force, work, etc., 4, 187
inductance, 195
magnetic field, 9, 78
—— pole, 9
magneto-motive force, 78
potential (static), 4
power, 18
quantity, 4, 187
reluctance, 79
resistance, 15
self inductance, 195
UNIVERSAL BATTERY SYSTEM
Circuit Alterations, 757
bridge duplex, 800
double current sounder, 788
—— —— duplex, 790
H-relay circuit, 800
quadruplex, 801
—— Wheatstone, 804
single current sounder, 785
—— —— duplex, 787
test board set, 806
Wheatstone, 794
—— duplex, 800
—— special circuits, 795

Universal battery system (*contd.*)
Wheatstone special duplex, 798
battery room, 756
charging arrangements, 778
complete installation, 762
distribution and fuse case, 771
divided battery, 758
electro magnet cut-out, 780
fuses, 766
lamp resistances, 784
loop batteries, 777
main and 24v. sets, 763
—— charging switch, 770
—— distribution cabinet, 771
metal cased res. coils, 784
percentage variation of C., 760–761
positive and negative switches, 767
primary batteries, 762
res. in power leads, 784
size of cells, 782
small office installation, 775
switch cabinet, 767
theory of, 760
uniformity of load, 765
voltages, 762
Universal connections, 326, 366, 818
—— shunt, 143
Up and down stations, 220

Vacuum res. See Res. lamps
Vagabond currents. See Stray Currents
Valve. See Thermionic Valve
Van Rysselberghe, 883
Variable lay, 1024
Varley's coils, 119
—— loop test, 975
Vibrator, 557, 622, 631
Virtual C. and E.M.F., 203
Voice frequency systems, 847
General Electric Co., 866
P.O. duplex, 876
—— single channel, 877
Selt, 871
Siemens-Halske, 857
Wald, 873
Voltaic cell, 10
—— electricity, 10
Volt definition, 16
Voltmeter, 146
Voltoids, 31
Vyle, C.C., 215, 350
—— polarized sounder, 215, 350

Wald voice frequency, 873
Watt, 18
Watt hour, 18
Weak current telegraphy, 1137
Western Electric multiplex, 622
—— —— transmtter, 604
—— —— voice frequency, 863
Weston ammeter, 126
—— voltmeter, 147
Wet rot, 1060
Wheatstone A.B.C. See A.B.C.
—— Creed. See Creed Wheatstone
Wheatstone Automatic System, 382
adding transmitter to key-worked circuit, 429
battery power, 434
—— resistance coils, 432
Creed additions, 383
duplex, 432
—— switch, 432
leak working, 430
news circuit, 434
perforator, 384
quadruplex, 329
receiver, 443
—— adjustment, 417
—— bell, 415
—— double slip drawer, 415
—— figure of merit, 418
—— inking arrangements, 413
—— motive power, 414
—— speed of slip, 418
——, spring driven, 418
——, substituted for relay, 430
——, train, 415
——, variable speed gear, 344
——, winding, 416
resistance in receiver circuit, 360
—— in sending circuit, 426
shunted condenser, 423, 426
Transmitter, 400
——, action of, 404
—— arrangement, 403
—— bias, 408
—— bolting, 411
—— Creed, 412
—— divided lever, 400, 403
—— fan, 411
—— jockey roller, 404
——, magnetic bias, 407
—— motive power, 402
—— speed, 411
—— starting lever, 411
—— star wheel, 332
—— switch, 427
—— variable speed gear, 409
Wheatstone Bridge, 153
dial type, 161
example of test, 157
insulation of testing battery, 161

Wheatstone Bridge (*contd.*)
measurement of resistance having capacity, inductance, or an E.M.F., 159, 953
P.O. type, 154
—— ——, range of, 155
proportionals chosen, 158
resistance of earthed circuits, 952, 954
reversing switch, 156
testing to false zero, 953
theory of, 153
use of condenser, 954
Wind and water line, 1061
—— pressure, 1079
Winding, differential, 123
——, double, 105
Wiped joint, 1047
Wire for apparatus and internal use—
constantan, 102
copper, resistance of, 67, 102
enamelled and flame-proof, 938, 944
eureka, 102
gutta-percha, 73
manganin, 102
nickel-silver, 102
platinoid, 102
platinum silver, 102
Wire for overhead lines—
breaking stress, 781
bronze, 1070
cadmium-copper, 1071
choice of, 1070
copper, binding in, 1072
Wire for overhead lines (*contd.*)
copper elasticity, 1104
—— electrical properties, 787
—— expansion, 826, 829
—— factor of safety, 1104
—— gauges of, 1071
—— jointing, 1074
—— stranded, 847
—— tensile strength, 787
—— terminating, 1075
iron, 1071
Wire for power crossings, 920, 1072
Wire, P. B. J., 920, 1072
Wire, length wound on bobbin, 88
and dimensions, 62
res. and temperature, 72
resistance constant, 1071
Wiring aerial lines, 1098
alterations to, 1110
elasticity effects of, 1104
factor of safety, 1104
renewals, 1110
sags and stresses, 1101
temperature effects, 1104
Wiring arms, 1110
—— internal, of offices, 944
Working speed. See Speed of Working

Zero adjusting lever, 508
false, 953
methods, 148
Zinc amalgamation, 26
—— rods, 29
Zinkhams, 31

PRINTED IN GREAT BRITAIN AT THE PITMAN PRESS, BATH
C—(5066)

537.81
H 415a

UNIV OF MAINE
3 7550 01050699 7